(No Model.)

C. L. EASTHAM.

THRASHING MACHINE ATTACHMENT.

No. 470,639. Patented Mar. 8, 1892.

FIG. 1.

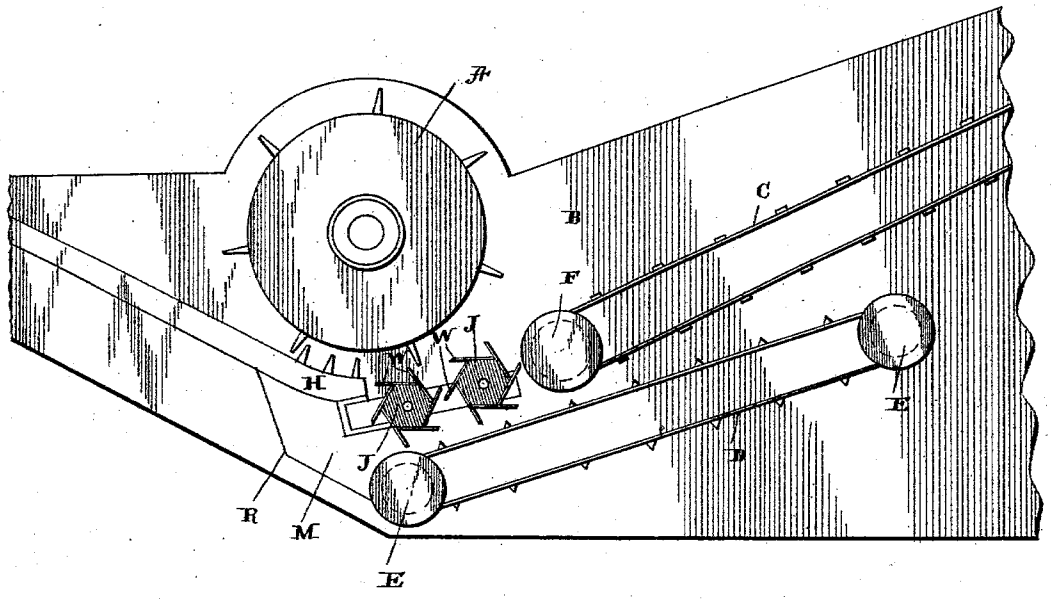

FIG. 2.

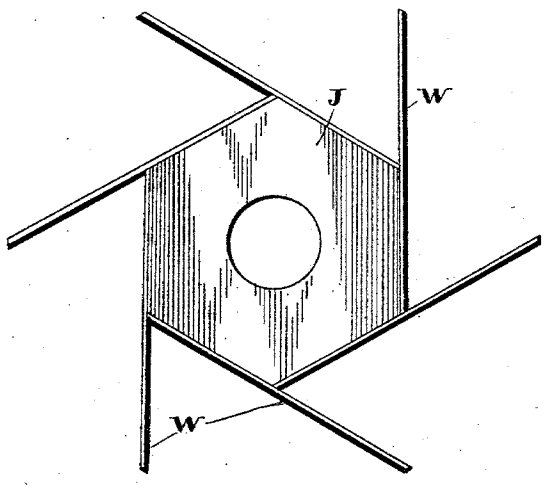

WITNESSES.

Geo. E. Freeh.

Roland A. Fitzgerald.

INVENTOR.

Charles L. Eastham

per

Wm. M. Eccles

Atty.

THE NORRIS PETERS CO., PHOTO-LITHO., WASHINGTON, D. C.

UNITED STATES PATENT OFFICE.

CHARLES L. EASTHAM, OF MEDORA, ILLINOIS, ASSIGNOR OF TWO-THIRDS TO WM. M. ECCLES, OF ST. LOUIS, MISSOURI, AND GEORGE T. WRIGHT, OF MEDORA, ILLINOIS.

THRASHING-MACHINE ATTACHMENT.

SPECIFICATION forming part of Letters Patent No. 470,639, dated March 8, 1892.

Application filed September 25, 1890. Serial No. 366,176. (No model.)

To all whom it may concern:

Be it known that I, CHARLES L. EASTHAM, a citizen of the United States, residing at the town of Medora, in the county of Macoupin, in the State of Illinois, have invented a new and useful Grate for Thrashing-Machines, of which the following is a specification, reference being had to the annexed drawings.

My invention relates to thrashing-machine grates; and my object is to make a grate under the cylinder which will effectually prevent the grain which has been thrashed from the straw from ever mixing with the straw or chaff again, as well as to thoroughly separate it from the straw, and also to construct a grate which will yield to the motion of the grain as it is thrown from the cylinder of the thrasher and prevent it from rebounding.

My invention consists in the arrangement and combination of parts hereinafter described and claimed. I attain these objects by the mechanism illustrated in the accompanying drawings, in which—

Figure I is a vertical section of a thrashing-machine having my improved grate attached. Fig. II is an end view of one of the revolving cylinders detached from the machine.

A is the thrashing-cylinder of a thrashing-machine, arranged in the usual manner and being provided with a concave H, which is also arranged in the usual manner.

D is a carrier adapted to receive and carry the grain as it is thrashed and is delivered from the thrashing-cylinder and is constructed and operated in the usual manner. It is supported on the pulleys E E′, which are journaled in the frame-work of the thrashing-machine.

C is a common straw-carrier and is operated over the pulley F at its lower end.

R is a recess made in the body of the machine directly under the thrashing-cylinder in the well-known and usual manner and serves to hold the common grate-bar in any ordinary machine.

B is the body of a thrashing-machine, constructed in any well-known manner, and serves to hold and support the moving portions of the machine.

M is a piece of iron or wood or other suitable material adapted to fit into the recess R in like manner as the end of the grate in the old machines. There are two of these pieces, one on each inner side of the machine. These pieces have the cylinders J J′ journaled in them, and they serve to support them and allow them to revolve therein. They are detachable in the same manner as the ordinary grate-bar is and are held in the recesses R in the same manner.

J J′ are two cylinders adapted to be revolved by the impact of grain coming from the concave and striking upon the ribs. These cylinders J J′ are provided with longitudinal ribs or blades on their peripheries, which serve to catch the grain as it comes from the concave, and they are arranged side by side adjoining the concave, and are journaled in a plane tangential to a circle concentric with the thrashing-cylinder, and are adapted to be rotated by the impact of the grain as it comes from the concave. They may be geared and made to run with the movement of the cylinder of the machine, however, without departing from the spirit of my invention. These revolving cylinders are provided with wings running longitudinally along the same and projecting out from the periphery of the cylinder, so as to form recesses for the reception and retention of the thrashed grain until it revolves over and deposits it underneath. These may be made of any form or shape that will retain and hold the grain until the cylinder turns and deposits it on the grain-carrier D. The advantage of these revolving cylinders over the common grate-bars is that they do not cause the grains of wheat to bounce off of them into the straw when struck by the grain coming with force from the thrashing-cylinder, as is the case with the old form of grates. They do not split and cut the grains of wheat when they strike on them, but by their constant revolution present a yielding surface as a resistance to each grain of wheat as it comes from the thrashing-cylinder.

When it is desired to attach one of my grates to a machine, all that is necessary is to remove the old grate-bar and slip in the side pieces M, with their cylinders J J′, into its place, with the wings W inclined toward the front of the machine, so as to catch the flying grain. There should be a sufficient number

of these to fill up the space occupied by the old grate.

I place the cylinders T T′ under the thrashing-machine cylinder, where the cylinder-grate is usually placed, and not in the rear of the thrashing-cylinder. By reason of these cylinders being placed in this position they will receive the grain when it is first knocked out of the straw by the thrashing-cylinder and never allow it to bounce into the straw again after being first knocked out by the thrashing-cylinder. This is of great advantage, as grain which bounces into the straw from the old-fashioned grate is difficult to get out again. By arranging these cylinders at the place of the grate and adapting them to revolve when the wheat strikes them the wheat is never allowed to bounce from the grate into the straw again.

Now what I claim, and for which I ask Letters Patent of the United States to be granted to me, is—

The combination, with a toothed thrashing-cylinder and concave, of a grate adjoining said concave, consisting of a plurality of ribbed or bladed cylinders journaled in a plane tangential to a circle concentric with the thrashing-cylinder and adapted to be rotated by the impact of the grain.

CHARLES L. EASTHAM.

Attest:

WM. M. ECCLES,

R. R. SWEET.