United States Patent

Shea

[15] **3,659,062**

[45] **Apr. 25, 1972**

[54] ACCELERATION RESPONSIVE SWITCHES EMPLOYING A PLURALITY OF MASSES

[72] Inventor: **Edward T. Shea,** Huntington, N.Y.

[73] Assignee: **Aerodyne Controls Corporation,** Farmingdale, N.Y.

[22] Filed: **Mar. 31, 1970**

[21] Appl. No.: **24,122**

[52] **U.S. Cl.** **200/61.45**

[51] **Int. Cl.** **H01h 35/14**

[58] **Field of Search** 200/61.45–61.53, 200/52; 340/262

[56] **References Cited**

UNITED STATES PATENTS

3,501,604 3/1970 Crockett 200/61.45

Primary Examiner—Robert K. Schaefer
Assistant Examiner—M. Ginsburg
Attorney—Edward H. Loveman

[57] **ABSTRACT**

An acceleration switch comprises a housing in which is a cylindrical bore of larger diameter communicating with a cylindrical cavity of smaller diameter. A large, electrically conductive mass, typically a spherical ball, is held by spring tension at one end of the bore. The large ball holds another mass which may be a smaller ball in the cavity and normally bridges a pair of electrical contacts in the housing. When the ball moves, upon application of sufficient force of acceleration, the smaller ball moves out of the cavity into the bore and prevents return of the larger ball to its original position. This represents the latching mode. The switch is normally closed and latches open, but can be arranged normally open to latch closed, or to open one pair of contacts while closing another pair of contacts.

10 Claims, 14 Drawing Figures

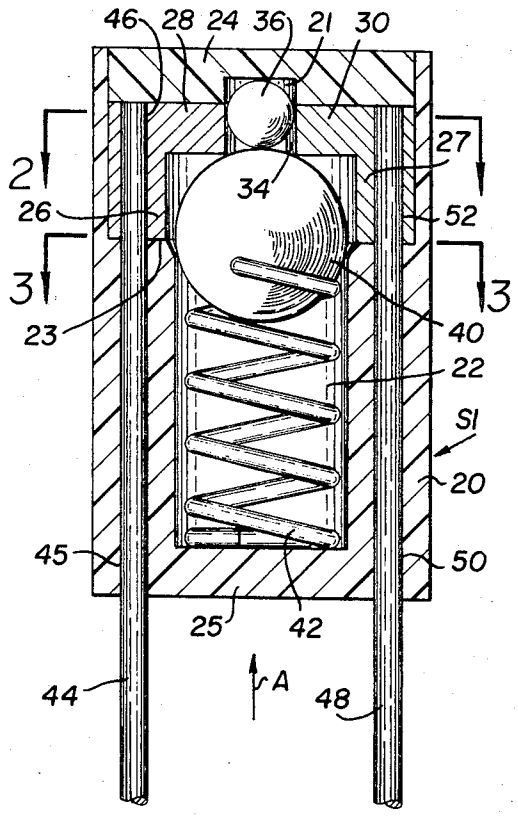

PATENTED APR 25 1972

3,659,062

SHEET 1 OF 4

FIG. 1

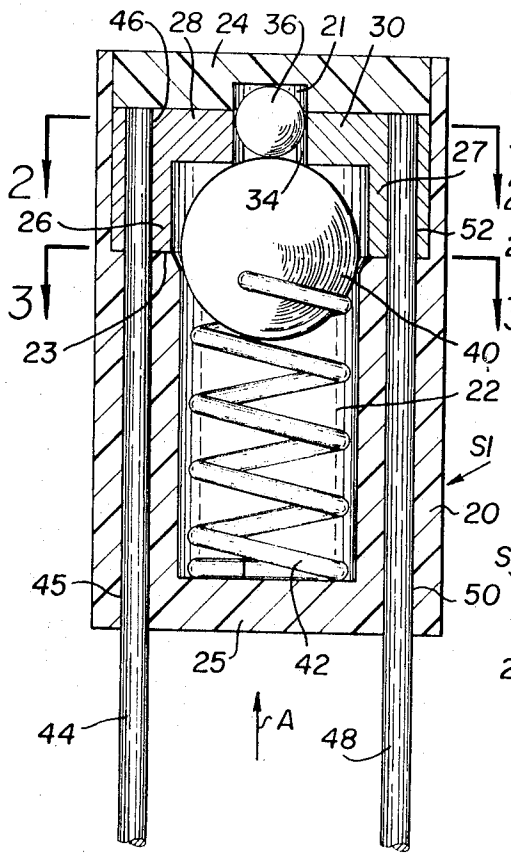

FIG. 4

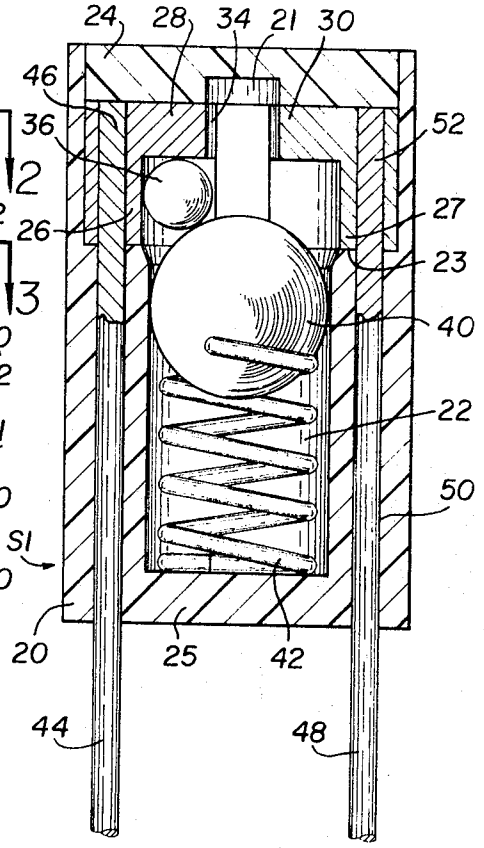

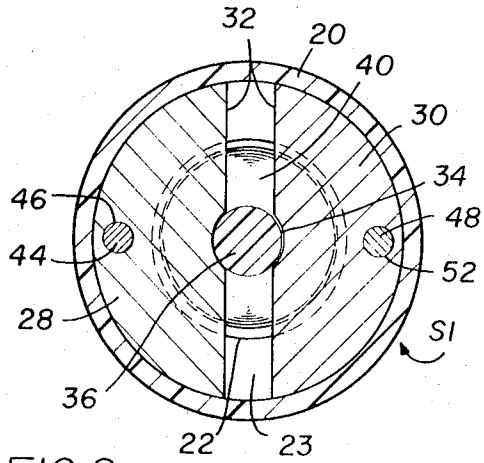

FIG. 2

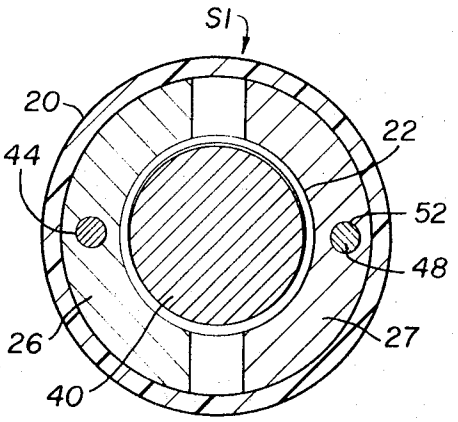

FIG. 3

INVENTOR
EDWARD T. SHEA

BY Edward H. Loneman
ATTORNEY

FIG. 5

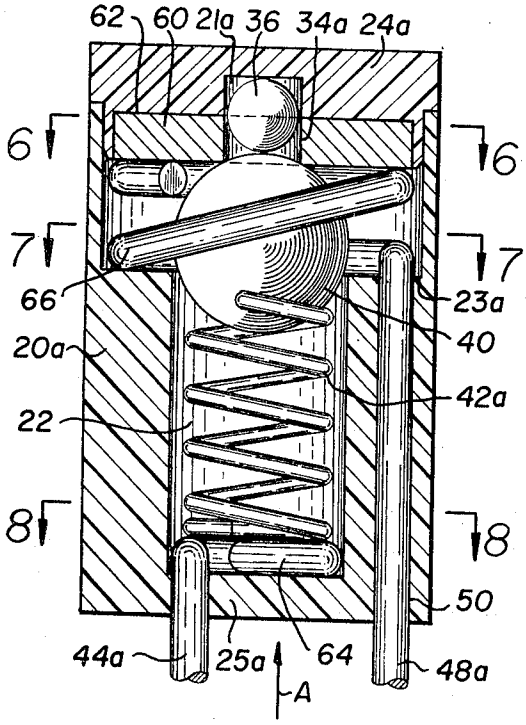

FIG. 9

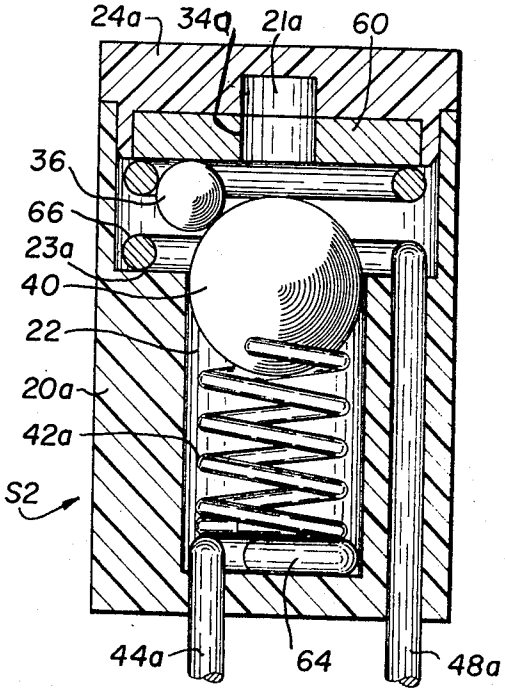

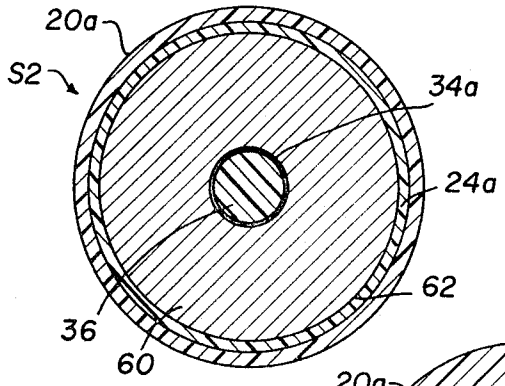

FIG. 6

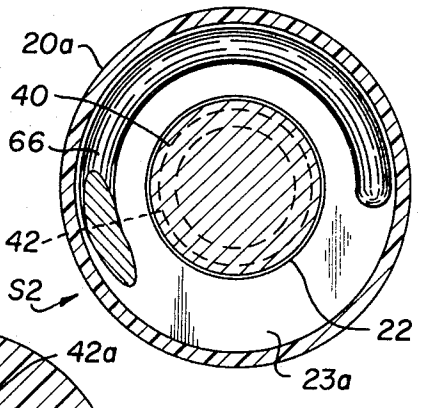

FIG. 7

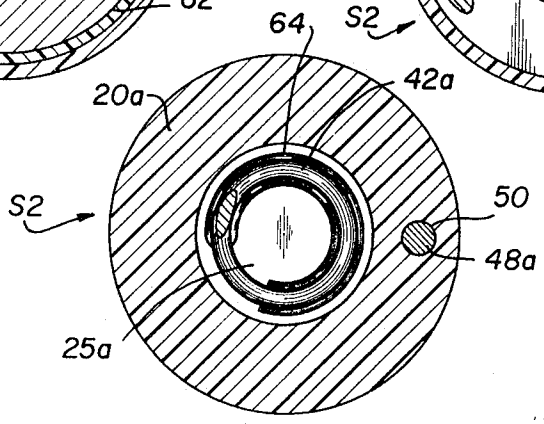

FIG. 8

INVENTOR
EDWARD T. SHEA

BY Edward M. Sommers
ATTORNEY

FIG. 10

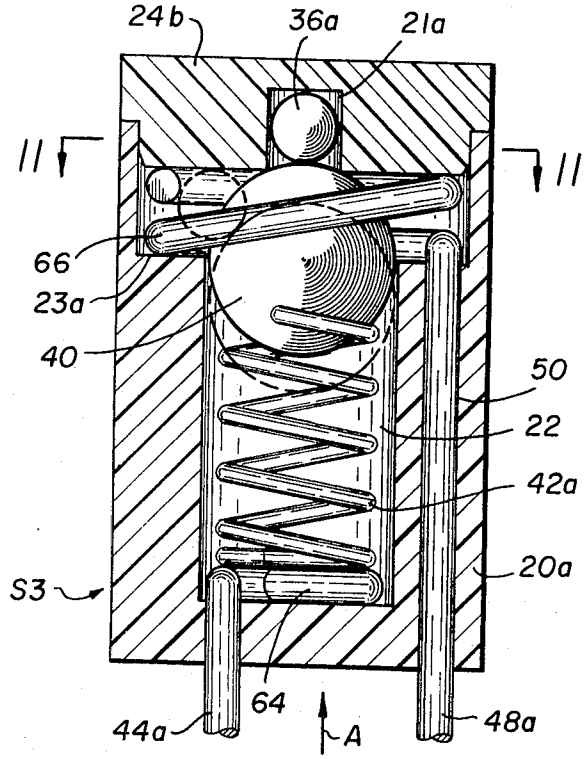

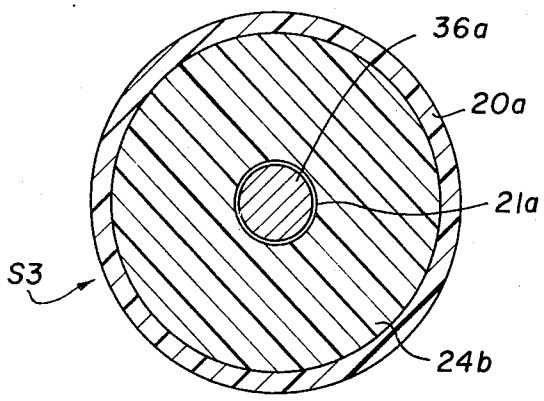

FIG. 11

INVENTOR
EDWARD T. SHEA

BY Edward H. Loveman

ATTORNEY

FIG. 12

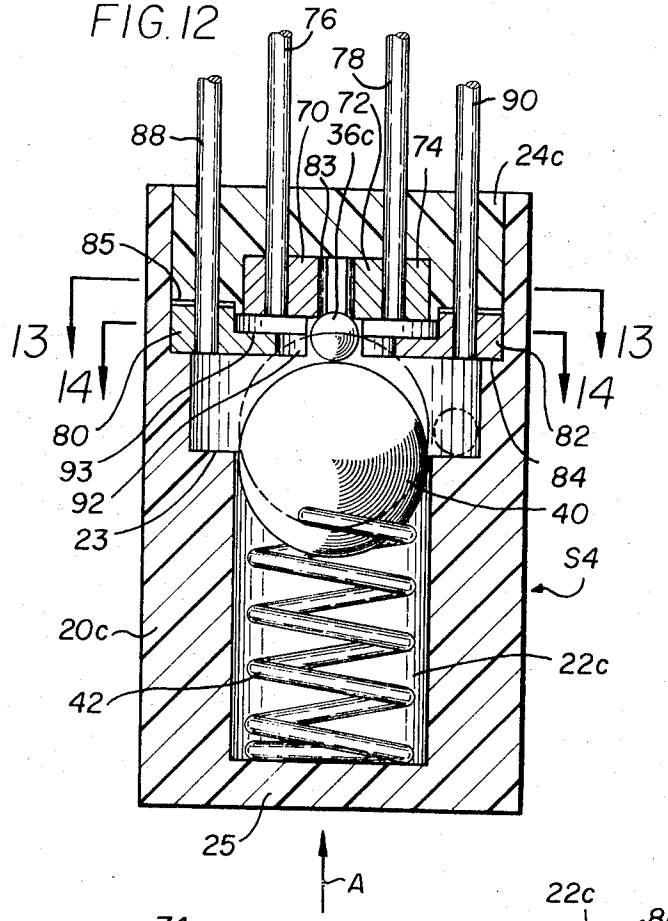

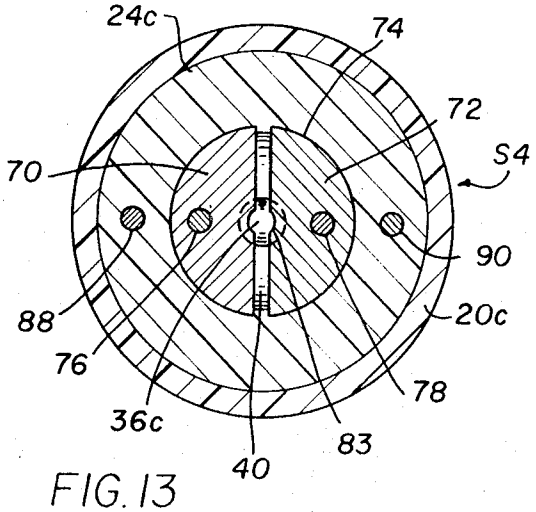

FIG. 13

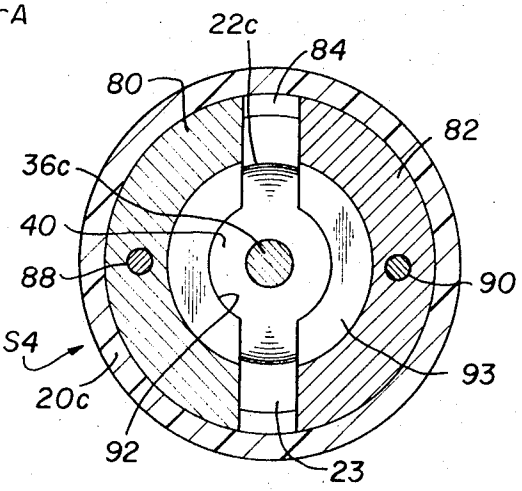

FIG. 14

INVENTOR
EDWARD T. SHEA

BY

ATTORNEY

ACCELERATION RESPONSIVE SWITCHES EMPLOYING A PLURALITY OF MASSES

This invention relates to the art of acceleration and inertia switches, especially those of the type having a movable mass in a housing, and more particularly the invention concerns an acceleration switch employing a plurality of cooperative acceleration responsive masses or balls in a single housing.

Acceleration switches have heretofore been known which employ a mass movable in a housing in response to an applied force. In order to hold the mass in a fixed position after movement, a permanent magnet is generally employed. Typical switches of this type are described in U.S. Pat. Nos. 2,898,415 and 2,890,303. Switches employing two or more movable balls in a housing are also known and have been described in U.S. Pat. No. 2,995,635. Such switches depend on the presence of permanent magnets or electromagnets in the housing of the switch. The use of permanent magnets or electromagnets is objectionable for a number of reasons such as expense, lack of reliability in operation, difficulty of arranging the switches to latch open or latch closed, etc. Switches of the character described have general utility in the fields of aircraft and space technology and shipment of delicate instruments or other fragile articles, etc. The need has long existed in these fields for a small, simple-to-manufacture, relatively inexpensive, reliable acceleration responsive switch which will latch open or closed. This need the present invention effectively fulfills.

The present invention avoids the difficulties and disadvantages of prior acceleration switches by avoiding the use of permanent magnets. According to the invention a cylindrical housing usually made of insulative material has an axial bore of larger diameter communicating with a cylindrical cavity of smaller diameter. A mass, or more specifically a spherical ball, of electrically conductive material is held at one end of the bore by an axially disposed coil spring. The ball holds another mass or ball of smaller diameter in the cylindrical cavity. When the larger ball is displaced by application of sufficient force of acceleration, the smaller ball moves out of the cavity into the larger bore and becomes wedged between the larger ball and the end of the bore. By this means, the larger ball can be displaced to open or close electrical contacts disposed in the bore and keep the contacts open or closed respectively.

Accordingly, it is a principal object of the invention to provide an acceleration switch which will be responsive to a force of acceleration directed along a predetermined axis of the switch.

Another object of the invention is to provide an acceleration switch incorporating two spherical masses of different sizes adapted to cooperate to open or close an external electric circuit when an accelerating force, impact or shock of at least a predetermined amount is applied to the switch.

These and other objects and many of the attendant advantages of this invention will be readily appreciated as the same becomes better understood by reference to the following detailed description when considered in connection with the accompanying drawings, wherein:

FIG. 1 is a front elevational, sectional view of a first form of acceleration switch embodying the invention, the internal parts of the switch being shown in a preset position;

FIG. 2 is a cross sectional view taken along line 2—2 of FIG. 1;

FIG. 3 is a cross sectional view taken along line 3—3 of FIG. 1;

FIG. 4 is a sectional view similar to FIG. 1, showing the switch parts in actuated position;

FIG. 5 is a front elevational sectional view of a second form of acceleration switch, internal parts being shown in preset position;

FIG. 6 is a cross sectional view taken along line 6—6 of FIG. 5;

FIG. 7 is a cross sectional view taken along line 7—7 of FIG. 5;

FIG. 8 is a cross sectional view taken along line 8—8 of FIG. 5;

FIG. 9 is a view similar to FIG. 5, showing parts of the switch of FIG. 5 in actuated position;

FIG. 10 is a front elevational, sectional view of a third form of acceleration switch;

FIG. 11 is a cross sectional view taken along line 11—11 of FIG. 10;

FIG. 12 is a front elevational, sectional view of a fourth form of acceleration switch;

FIG. 13 is a cross sectional view taken along line 13—13 of FIG. 12; and

FIG. 14 is a cross sectional view taken along line 14—14 of FIG. 12.

Referring now to the drawings, wherein like reference characters designate like or corresponding parts throughout the several views, there is shown in FIGS. 1 - 4 a first form of acceleration switch generally designated as reference numeral S1 comprising a cylindrical casing or housing 20 made of insulative material and formed with an internal, axial, cylindrical bore 22. A circular insulative disk 24 is fitted and secured into the open end of the housing 20 to serve as a cover and to close the top of the housing. The other end 25 of the housing 20 is closed and integral with the cylindrical wall of the housing. A cylindrical cavity 21 is formed in disk 24 and is open to bore 22. Inside bore 22 on an annular seat 23 is a pair of partially cylindrical, arcuate, electrically conductive contacts 26, 27. The contacts are formed with radial arcuate flanges 28, 30 which abut the inner side of disk 24. The flanges are coplanar and have inner faces 32 which are spaced apart. Curved recesses 34 are formed in the faces 32. A small ball 36 made of insulative material is momentarily disposed in the cavity 21 and in the space between recesses 34. The small ball is held in the position shown in FIGS. 1 and 2 by a larger ball 40. Ball 40 is made of a suitable electrically conductive material and has a diameter only slightly smaller than that of bore 22. Ball 40 is held in the preset position shown in FIG. 1 by a helically coiled spring 42 which bears against the closed end 25 of the housing 20 at the end of bore 22.

It will be apparent that the conductive ball 40 bridges contacts 26, 27 both electrically and mechanically as clearly shown in FIGS. 1 and 2. A first electrical conductor or lead 44 extends through a bore 45 in the wall of the housing 20 and terminates in a bore 46 in the contact 26. A second electrical conductor or lead 48 extends through a bore 50 diametrically opposite from the bore 46 and terminates in a bore 52 in the contact 27. An external electrical circuit (not shown) may be connected to the free ends of conductors 44 and 48 which extend outwardly of the closed end 25 of the housing 20. The switch will normally be closed in the preset condition of the parts as shown in FIGS. 1, 2 and 3.

FIG. 4 shows the parts in actuated position. Due to application of a sufficient force of acceleration, impact or shock axially of the housing 20 in direction A, the spring 42 retracts axially along with the ball 40. Smaller ball 36 moves out of the cavity 21 and out of the recesses 34 into the bore 22. As the force of acceleration, impact or shock decreases, the spring 42 expands and the ball 40 is moved axially toward the cavity 21 such that the ball 36 becomes wedged between the ball 40 and either the contact 20 or 27. In any case, the ball 40 is prevented from contacting and bridging the flanges 28, 30 so that now the switch is electrically open. The electrical circuit which will be connected to the conductors 44, 48 can be actuated to operate a signal, alarm or perform any other required task in response to operation of actuation of switch S1 as described. An important feature of the invention is that the switch will now remain in the latched open position as illustrated in FIG. 4 and a subsequent impact on the switch will not actuate the switch again. The ball 36 is wedged in place against the flange 28 or 30 and cannot become accidentally displaced. If desired, the housing 20 may be made of transparent material so that the positions of the balls 36, 40 in both set and actuated positions may be observed, thereby providing a visual indication of the state of the switch at all times.

FIGS. 5 through 9 show another acceleration switch generally designated by reference symbol S2 in which parts

corresponding to those of switch S1 are identically numbered. Switch S2 is also arranged so as to be normally closed but will be latched open upon actuation of the switch. Inside of insulative housing **20***a* is a conductive disk **60** seated in a recess **62** formed in the bottom of disk **24***a* which closes the open end of the cylindrical housing. Disk **60** has a central hole **34***a* which registers with cavity **21***a* in the disk **24***a*. Insulative ball **36** seats normally in hole **34***a* and cavity **21***a*. Conductor **44***a* is electrically connected to coil spring **42***a* and may for convenience be formed with a coil turn **64** at the bottom **25***a* of the housing **20***a*. The coil spring **42***a* bears on the coil turn **64** in the bore **22** and supports the conductive ball **40**. Conductor **48***a* extends through bore **50** and terminates against a coil **66** which bears on annular seat **23***a* and extends axially upward to the disk **60**. Normally the ball **40** will contact the disk **60** and thus serves as a bridge between conductors **44***a* and **48***a* via conductor coil spring **42***a* and conductive disk **60**.

FIG. **9** shows the position of the ball **40** when displaced by a force in direction A indicated in FIG. **5**. The coil spring compresses the ball **40** and retracts so that the ball **36** becomes wedged between the ball **40** and the disk **60**. This breaks the electrical circuit between conductors **44***a* and **48***a*. The switch remains latched in this open position since insulative ball **36** cannot be accidentally dislodged to return to cavity **21***a*. Switch S2 has the desirable feature of latching in an open position regardless of the point at which the ball **36** contacts the disk **60**. It should be noted here that although conductor **66** is shown as a coil it may be a hollow cylinder.

FIGS. **10** and **11** show a switch generally designated by reference symbol S3 which is very similar to switch S2 but arranged so as to be normally open but latching closed when actuated. In switch S3, parts corresponding to those of switches S1 and S2 are identically numbered. A ball **36***a* in this switch is an electrically conductive member and the disk **60** of switch S2 is omitted. Disk **24***b* is an insulative member with an axial cavity **21***a* containing the ball **36***a*. The upper turn of the coil **66** bears against the underside of the disk **24***b*. In the solid line position of the ball **40**, shown in FIG. **10**, the electrical circuit between the conductors **44***a* and **48***a* is open since the ball **40** is spaced from the coil **66**. When the switch is actuated by an accelerating force in direction A, the ball **36***a* becomes wedged between the ball **40** and the disk **24***b* and is pressed against the upper turn of coil **66** as indicated by the dotted lines in FIG. **10**. Since both balls **36***a* and **40** are conductive, the two balls cooperate in bridging the circuit between the conductors **44***a* and **48***a* via the conductive spring **42***a*.

FIGS. **12** through **14** show an acceleration switch generally designated as S4 which has parts identical to those employed in switches S1, S2 and S3 and which are identically numbered. Thus, cylindrical housing **20***c* has an axial bore **22***c* with annular seat **23** and the coil spring **42** in the bore **22***c* supports the electrically conductive ball **40**. As in the previously described switches, the ball **36***c* is electrically conductive and normally bridges the spaced arcuate contacts **70**, **72** seated in a recess **74** in an insulated cover disk **24***c*. Electrical conductors **76**, **78** are connected respectively to contacts **70**, **72** and extend axially through the disk **24***c*. Another pair of spaced arcuate electrical contacts **80**, **82** are seated on an annular shoulder **84** formed in the bore **22***c* above the seat **23**. Upper ends of contacts **80**, **82** extend into a recess **85** in the disk **24***c*. Electrical conductors **88**, **90** are connected to the contacts **80**, **82** respectively and extend upwardly through the disk **24***c*. Ball **36***c* is normally disposed in a cylindrical cavity defined by a recess **83** in the contacts **70**, **72** to bridge these contacts as shown clearly in FIGS. **12** and **13**. Ball **40** holds ball **36***c* in place such that ball **36***c* closes the circuit between the conductors **76** and **78** via contacts **70** and **72**.

When the ball **40** is retracted upon application of an accelerating force in axial direction A, the ball **36***a* becomes displaced from its seat at contacts **70**, **72** and rolls down to seat **23**. Thereafter, when the accelerating force is reduced, ball **40** is urged upwardly by spring **42** and bridges contacts **80**, **82** at an inner recess **92** of an arcuate flange **93**. By this arrangement, the normally closed circuit between conductors **76**, **78** is opened while the normally open circuit between conductors **88**, **90** is closed. The position of balls **36***c* and **40** in the actuated position of the switch is shown by dotted lines in FIG. **12**.

In all forms of switch described, a pair of balls of different sizes are used as masses to hold the switch latched in actuated condition. Although this form for the masses is preferable, it is obvious that the masses may take other shapes, i.e. the lower ball may be pyramidically or conically shaped and the upper ball may take a similar form or be hemispherically shaped, etc., as long as the upper mass may move along a surface of the lower mass and thereby be prevented from returning to its original position after an acceleration. The actuated condition can be that of an open or closed circuit or of two circuits, one open and one closed. In all forms of switch described, the housing may be made of transparent material so that the internal positions of the balls and the preset or actuated condition of the switch can easily be seen.

It should be understood, of course, that the foregoing disclosure relates to only a preferred embodiment of the invention and that it is intended to cover all changes and modifications of the examples of the invention herein chosen for the purposes of the disclosure, which do not constitute departures from the spirit and scope of the invention.

What is claimed is:

1. An acceleration responsive switch comprising:

an insulative housing having a bore extending axially therein;

means defining a cavity communicating with said bore adjacent one end of said housing;

electrical contact means in said bore adjacent said one end of said housing;

an electrically conductive first mass means in said bore;

spring means in said bore urging said first mass means toward said one end of said housing; and

a second mass means in said cavity normally held there by said first mass means, whereby when said first mass means moves away from said one end of said housing in response to an axially directed accelerating force applied thereto, said second mass means moves out of said cavity into said bore causing one of said mass means to touch said contact means.

2. An acceleration switch as defined in claim **1**, wherein said electrical contact means comprises:

a pair of spaced conductive electrical contacts, said first mass means being normally juxtaposed to both of said contacts to bridge the same and close an electrical circuit therebetween;

said second mass means being an insulative member so that electrical continuity between said first mass means and said electrical contacts is broken when said second mass means moves into said bore to hold said first mass means spaced away from one of said electrical contacts.

3. An acceleration switch as defined in claim **2**, further comprising a pair of electrical conductors connected to said contacts respectively and extending out of said housing for connecting terminals of an external electric circuit of said conductors.

4. An acceleration switch as defined in claim **1**, wherein said electrical contact means comprises a conductive ring having a central hole registering with said cavity for passing said second mass means through said hole and into said bore in response to said accelerating force.

5. An acceleration switch as defined in claim **4**, further comprising:

a first electrical conductor in said housing having one end terminating in said bore and contacting said ring;

said spring means being an electrically conductive member; and

a second electrical conductor in said housing having one end contacting said spring means, said second mass means being an insulative member;

said first mass means, spring means and ring forming parts of a series circuit between said first and second conductors, whereby said series circuit is broken when said second mass means moves out of said cavity and into said bore.

6. An acceleration switch as defined in claim 1, wherein said electrical contact means comprises a first electrical conductor having one end terminating in said bore, said second mass means being an electrically conductive member, whereby a series electrical circuit is maintained between said first mass means and said first conductor by said second mass means when said second mass means moves out of said cavity and is disposed in said bore.

7. An acceleration switch as defined in claim 6 wherein said spring means is an electrically conductive member and further comprising a second electrical conductor having one end terminating in said bore and contacting said spring means so that said spring means and said second electrical conductor form part of said series circuit.

8. An acceleration switch as defined in claim 1, wherein said electrical contact means comprises:

a first electrical conductor having one end terminating in said bore, and a second electrical conductor having one end terminating in said bore and contacting said spring means;

said spring means being an electrically conductive member;

said first mass means assuming either of two positions in said bore depending on the location of said second mass means in said housing whereby said first and second electrical conductors, said first mass means and said spring means form parts of a closed series circuit in one of said positions of said first mass means.

9. An acceleration switch as defined in claim 1, wherein said electrical contact means comprises a first pair of spaced electrical contacts, said first mass means assuming either of two positions depending on the location of said second mass means in said housing, whereby said first mass means bridges said contacts to close an electrical circuit therebetween in one of said positions of said first mass means.

10. An acceleration switch as defined in claim 9, wherein said second mass means is an electrically conductive member, and a second pair of spaced contacts in said cavity normally bridged by said second mass means and closing another electrical circuit, whereby said another electrical circuit between said second spaced contacts is opened when said second mass means moves out of said cavity into said bore.

* * * * *