June 18, 1940. L. W. BLAU 2,205,163

FLASHLIGHT

Filed Nov. 4, 1937 2 Sheets-Sheet 1

Fig. 1.

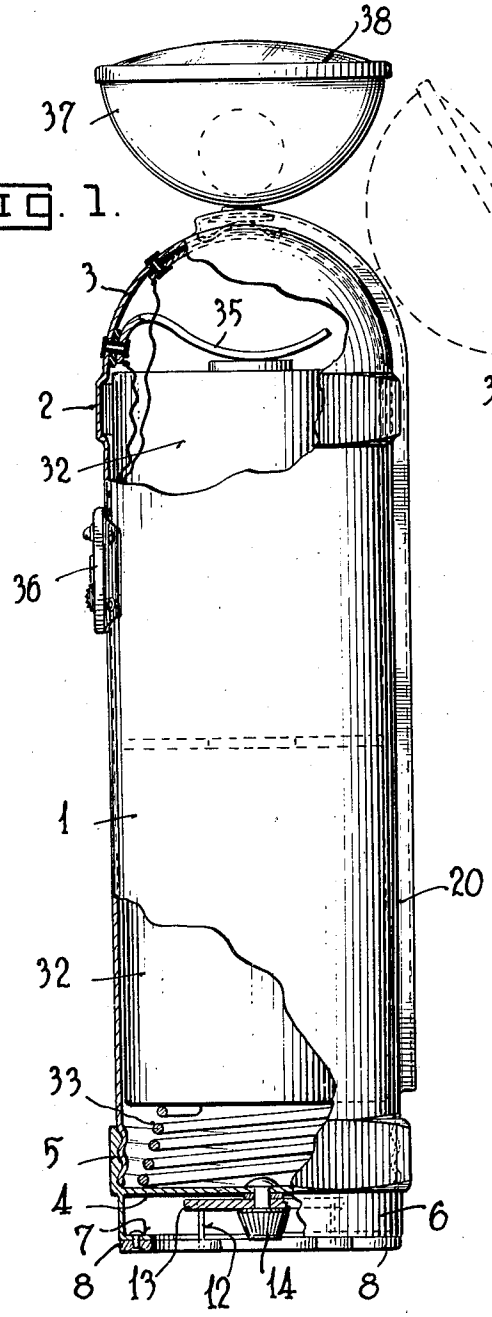

Fig. 2.

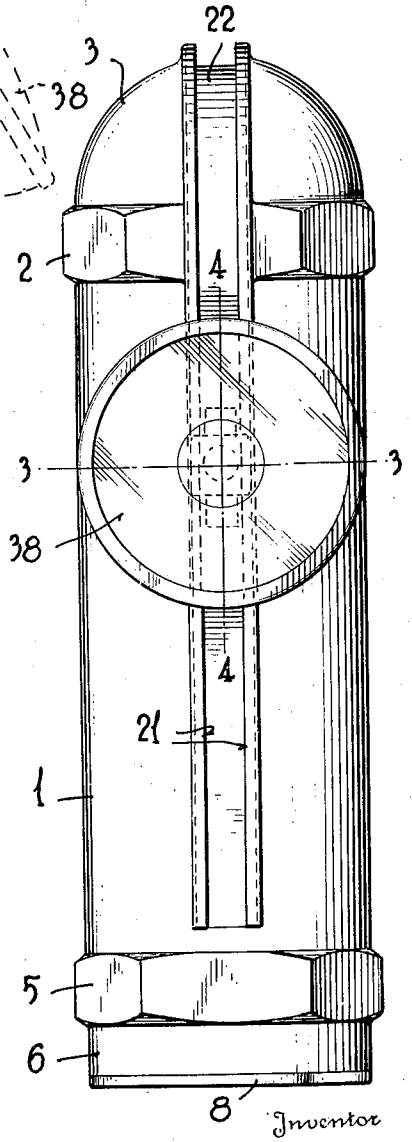

Inventor

Leon W. Blau.

By Arthur M. Hahn.

Attorney

June 18, 1940. L. W. BLAU 2,205,163

FLASHLIGHT

Filed Nov. 4, 1937 2 Sheets-Sheet 2

Fig. 3.

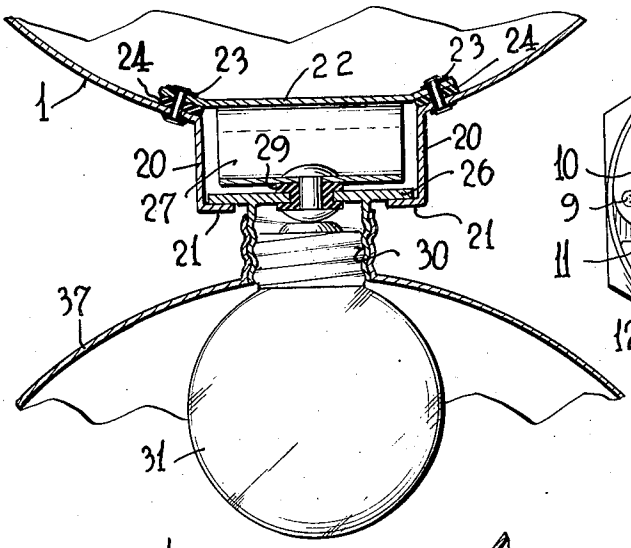

Fig. 5.

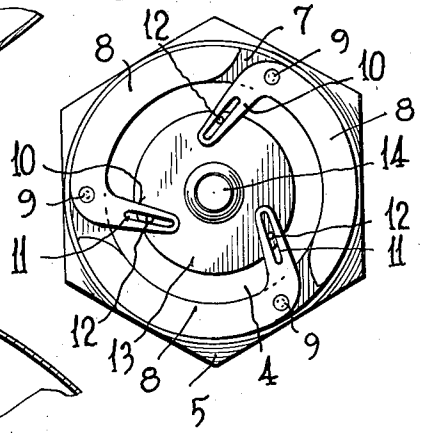

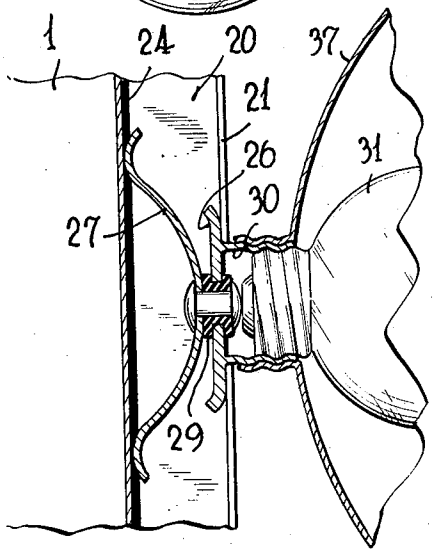

Fig. 4

Fig. 6.

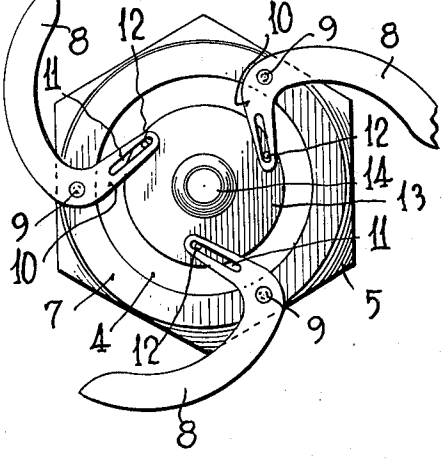

Inventor

Leon W. Blau

By Arthur M. Hahn.

Attorney

Patented June 18, 1940

2,205,163

UNITED STATES PATENT OFFICE

2,205,163

FLASHLIGHT

Leon W. Blau, Providence, R. I.

Application November 4, 1937, Serial No. 172,829

4 Claims. (Cl. 240—10.67)

This invention relates to flashlights and is directed more particularly to a flashlight having an adjustable light head and a mechanism for supporting the flashlight in vertical position.

The primary object of the present invention is to provide a flashlight wherein the light head comprising the reflector, electric bulb and lens may be moved as a unit from the normal position which is in longitudinal alignment with the case, to any one of a plurality of positions along the side wall of the case.

Another object is to provide a flashlight of the aforesaid character which shall include prismatic portions on the flashlight case so that the device may be laid on its side with any of the faces of the prismatic portions serving as the supporting surfaces, thereby providing variable angles of elevation for the adjustable light head which then moves in a horizontal plane.

Another object is to provide a supporting mechanism, normally concealed within the base of the flashlight, but which may be easily and quickly operated to provide a plurality of outwardly projecting arms that will provide an ample and steady support for the case when stood in a vertical position, and thus permit the light head to be moved in a vertical plane to direct the light as desired.

A further object is to provide a flashlight of the aforesaid character which shall be simple in construction, inexpensive to manufacture, highly efficient in operation, and which may be easily and quickly adjusted to direct the light rays in any desired direction while the device is resting on a suitable support and thus allow the operator the freedom of both hands for performing any task.

With the foregoing and other objects in view, the invention may be stated to consist in the various novel features of construction and arrangement or combination, all of which will be fully described hereinafter and pointed out in the appended claims.

In the drawings accompanying and forming a part of this application, I have illustrated a flashlight constructed in accordance with my invention and wherein,

Figure 1 is an elevation, with parts broken away, of my improved flashlight;

Figure 2 is an elevation at right angles to Figure 1;

Figure 3 is an enlarged fragmentary transverse sectional view through the adjustable light head and casing taken on line 3—3 of Figure 2;

Figure 4 is a fragmentary longitudinal sectional view taken on the line 4—4 of Figure 2; and

Figures 5 and 6 are end elevations showing respectively the supporting arms in concealed or retracted position, and exposed or projected positions.

The flashlight herein illustrated comprises a casing 1 substantially cylindrical in shape and provided adjacent one end with a prismatic portion 2 which in the present instance is in the shape of a hexagon so as to form six supporting surfaces for the flashlight when it is rested in a horizontal position as will be explained more fully hereinafter. The end adjacent said hexagonal portions is preferably closed by an end wall 3 that is semi-spherical in shape.

The opposite, or base end of the cylindrical casing is threaded to receive a closure cap 4 that is also formed with a prismatic portion 5 which is preferably of the same cross section as the portion 2. As shown in Figures 1, 5 and 6, the end cap 4 is formed with a longitudinally projecting cylindrical wall 6 which is turned inwardly at 7 to form a support for a plurality of arms 8. Each of these arms is preferably arcuate in shape and each is pivoted at 9 to the inwardly turned wall 7. Each arm is also formed with an inwardly directed portion 10 that is slotted at 11 for engagement with its respective pin 12, which pins are mounted on a disk 13. This disk is pivoted to the cap 4 and is provided with a knob 14 so that it may be easily rotated. From the foregoing description, it will be readily apparent that when knob 14 is rotated in a clockwise direction as viewed in Figure 5, the arms 8 will be simultaneously projected to the position shown in Figure 6, and when the knob is rotated in a counterclockwise position as viewed in Figure 6, the arms 8 will be retracted to the position shown in Figure 5. When the arms 8 are extended, they form a firm and steady support for the flashlight when it is stood in a vertical position, and when the arms are retracted, they lie within the cylindrical confines of the casing and hence are out of the way.

The adjustable light head is movable with respect to the casing to any desired position. As shown in Figures 1–3, I preferably provide the cylindrical casing 1 with a pair of spaced longitudinally extending and outwardly directed portions 20, the outer marginal edge portions 21 whereof are turned inwardly toward each other to define a guide channel. This guide channel preferably extends from the spherical end 3 of the flashlight, around said spherical end wall and

down the side of the casing to a point closely adjacent the end cap 4 as clearly shown in Figures 1 and 2. The inner portion of the channel is closed by a conductor plate 22 that is riveted or otherwise fastened to the casing 1 and insulated therefrom by bushings 23 and insulating strips 24, as clearly shown in Figure 3.

A metal plate 26 is slidably engaged in the channel and normally bears against the inner surfaces of the inturned flanges 21 to make electrical contact with the casing 1. Riveted, or otherwise secured to the plate 26, is a spring contact shoe 27 which engages conductor plate 22 and also serves to yieldingly urge the plate 26 into contact with flanges 21. The contact shoe 27 is insulated from plate 26 by an insulating bushing 29 as clearly shown in Figures 3 and 4. Plate 26 is formed with a threaded socket 30 into which a flashlight bulb 31 is adapted to be screwed. When so positioned, the threaded base of the light will be in electrical contact with plate 26, casing 1 and the negative side of the dry cells indicated at 32 in the casing, through the usual coiled spring 33 interposed between the cap 4 and the bottom wall of one of the dry cells. The positive pole of the battery is engaged with a spring contact finger 35, which in turn is electrically connected through the usual push button 36, to the contact plate 22. The circuit is completed to the central contact of the lamp through spring shoe 27, and the rivet holding said shoe to plate 26. A reflector 37 is threaded on the outer wall of socket 30 and is provided with the usual lens 38.

From the foregoing description, it will be apparent that the light head can be moved from the normal position, which is in alignment with the longitudinal axis of the casing, to any selected position along the channel as for example that indicated in dotted lines in Figure 1 or that shown in full lines in Figure 2. The flashlight can be stood on end by projecting the arms 8 as previously described and the light head will be adjustable in a vertical plane through a substantial portion of its movement and also through an angle about the spherical end 3. If desired, the flashlight may be laid on its side with any of the hexagonal faces 2 supporting the device to obtain any desired elevation of the light head, whereupon the light head will be movable through a horizontal plane and also the aforementioned angle.

It is thus apparent that my improved flashlight is adjustable to direct the light to any desired angle when rested on any suitable support, so that the operator can have both hands free. The flashlight may also be used as the conventional flashlight when the light head is positioned as shown in Figure 1, or the light head may be moved to any convenient position while the device is held in the hand, as for example when walking to illuminate the roadway.

What I claim is:

1. A flashlight including a casing, a guide track extending longitudinally along one side wall and thence through substantially 90° across one end wall of said casing, and a light head slidable in said guide track from a position substantially in alignment with the longitudinal axis of the casing to any selected point in said track, and means for maintaining electrical circuit to said light head for all selected adjusted positions.

2. A flashlight including a casing having a rounded end wall, a guide track extending longitudinally along one side wall and around said end wall of said casing, a light head slidable in said guide track from a position substantially in alignment with the longitudinal axis of the casing to any selected point in said track, means for maintaining electrical circuit to said light head for all selected adjusted positions, and means for supporting said casing in either horizontal or vertical position.

3. A flashlight including a casing, a guide track forming one electrical conductor and extending longitudinally along one side wall and across one end wall of said casing, a light head slidable in and electrically connected to said guide track from a position substantially in alignment with the longitudinal axis of the casing to any selected point in said guide track, and means adjacent said track and insulated therefrom cooperating with said light head for maintaining an electrical circuit for all adjusted positions of said light head in said guide track.

4. A flashlight including a casing, a channel shaped guide track extending longitudinally along one side wall and across one end wall of said casing and forming one conductor for the lamp, a light head slidable in said guide track from a position substantially in alignment with the longitudinal axis of the casing to any selected point in said guide track, and a continuous conductor plate adjacent said track and insulated therefrom cooperating with said light head for maintaining an electrical circuit for all adjusted positions of said light head in said guide track.

LEON W. BLAU.