Oct. 23, 1934. A. E. HUTT 1,977,881

COMBINATION DAY AND SLEEPING RAILROAD COACH

Filed May 24, 1933 4 Sheets-Sheet 1

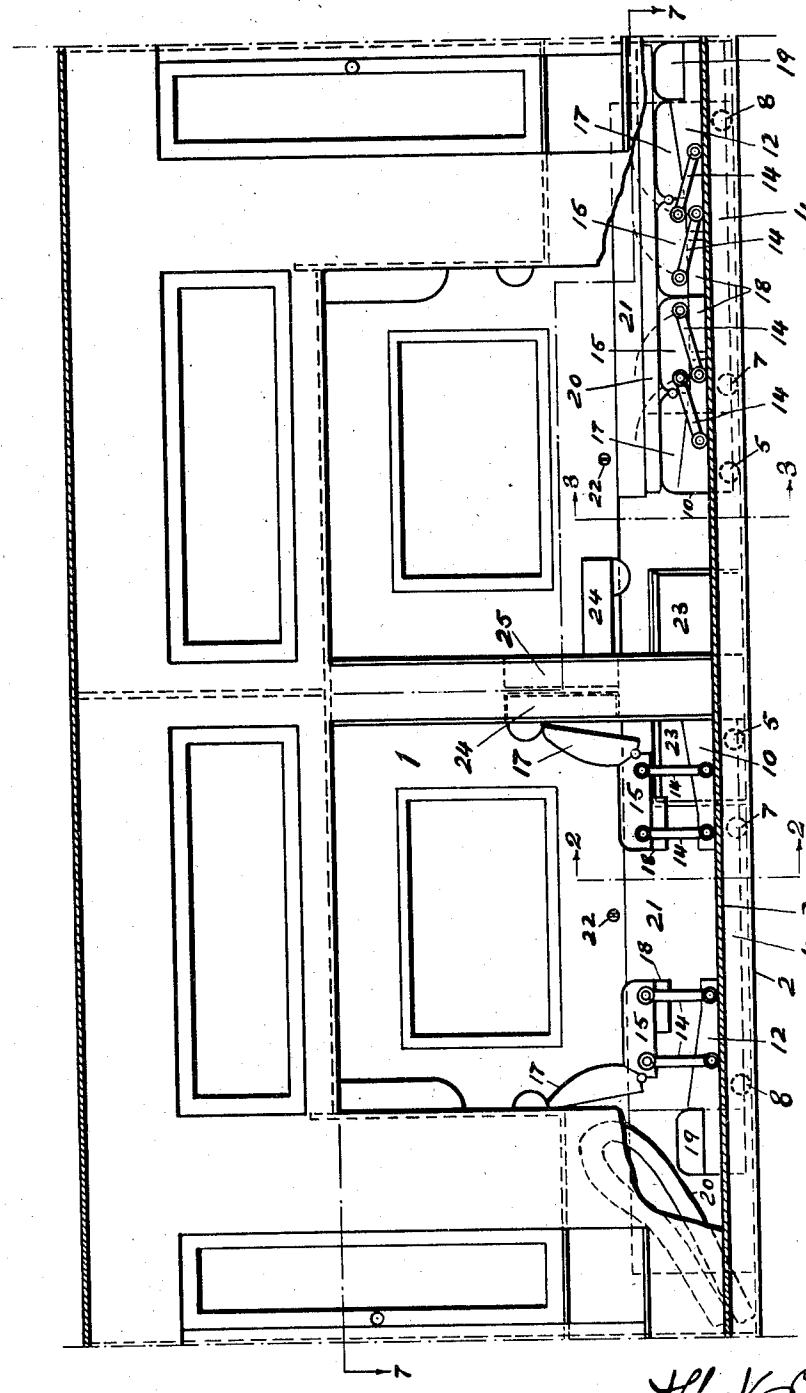

Fig. 1.

INVENTOR

Albert E. Hutt

Oct. 23, 1934. A. E. HUTT 1,977,881

COMBINATION DAY AND SLEEPING RAILROAD COACH

Filed May 24, 1933 4 Sheets-Sheet 2

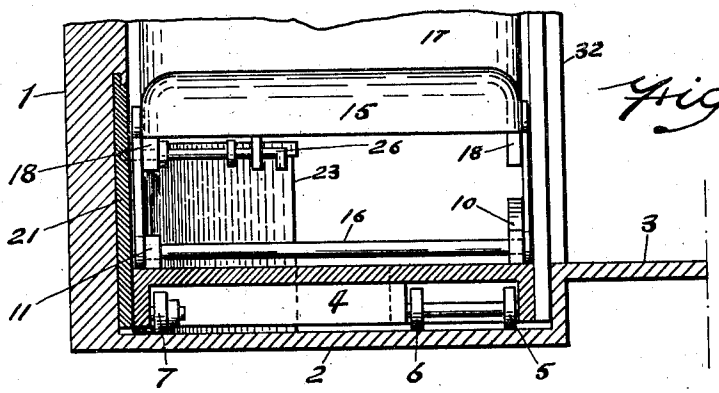

Fig. 2.

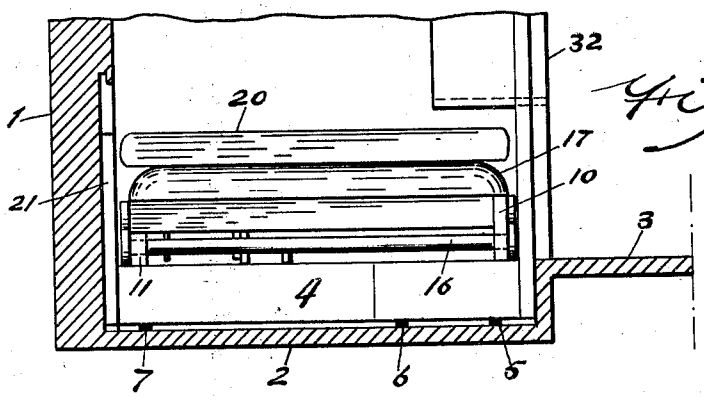

Fig. 3.

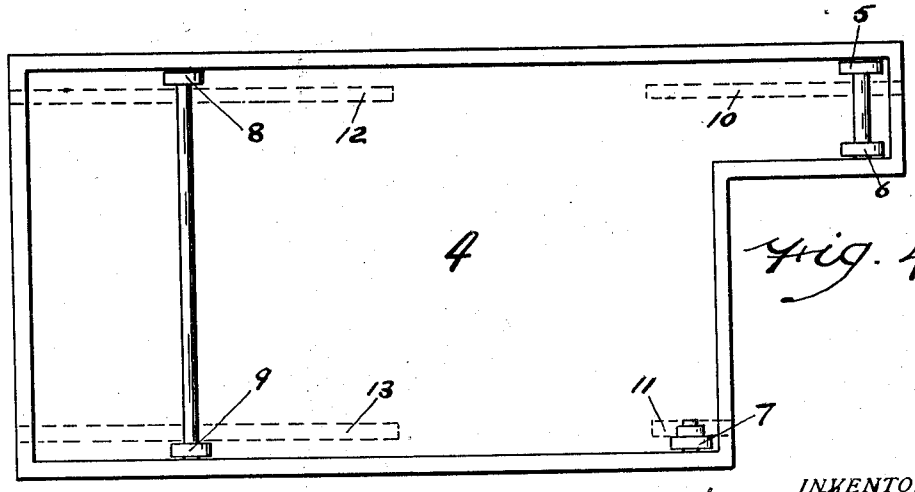

Fig. 4.

INVENTOR

BY Albert C. Hutt

Oct. 23, 1934. A. E. HUTT 1,977,881

COMBINATION DAY AND SLEEPING RAILROAD COACH

Filed May 24, 1933 4 Sheets-Sheet 3

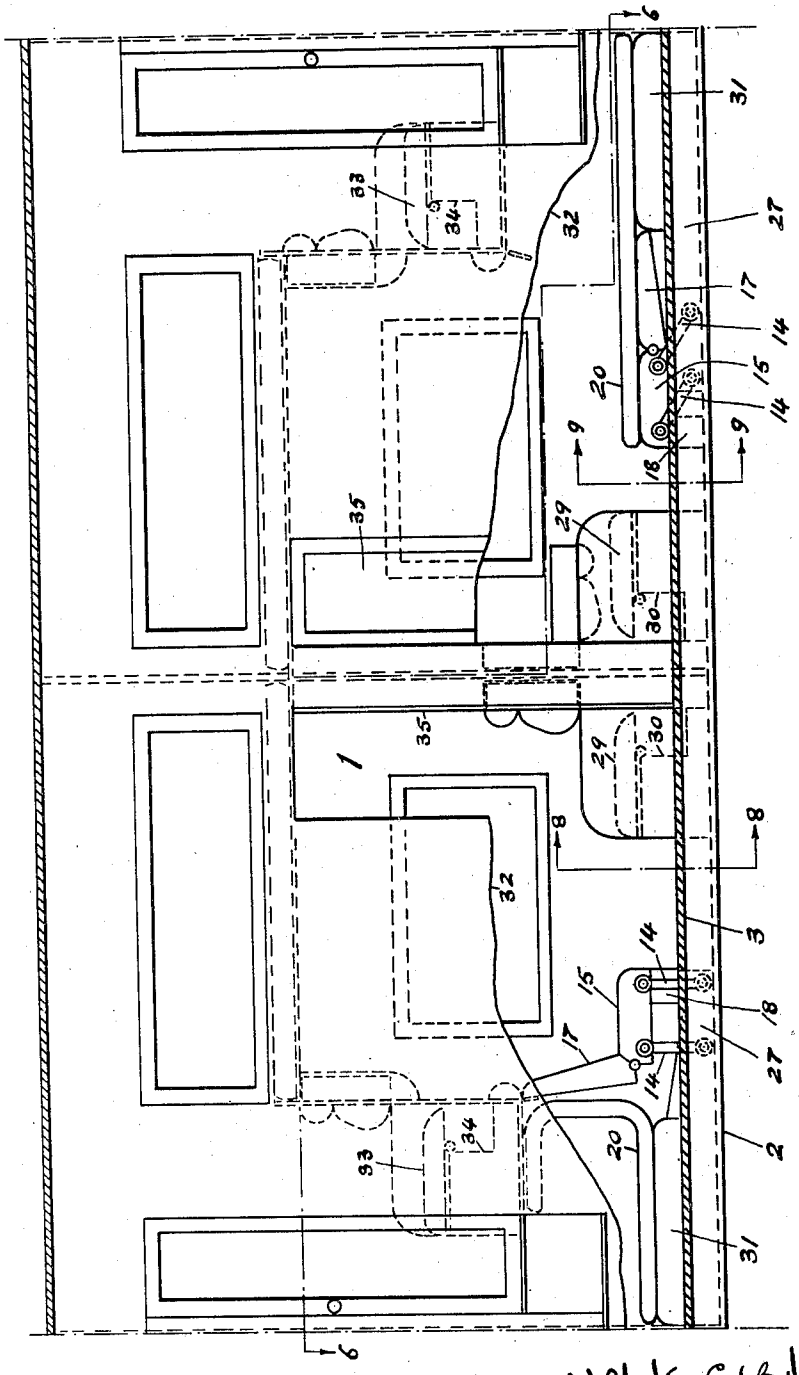

Fig. 5.

INVENTOR

Albert E. Hutt

Oct. 23, 1934. A. E. HUTT 1,977,881

COMBINATION DAY AND SLEEPING RAILROAD COACH

Filed May 24, 1933 4 Sheets-Sheet 4

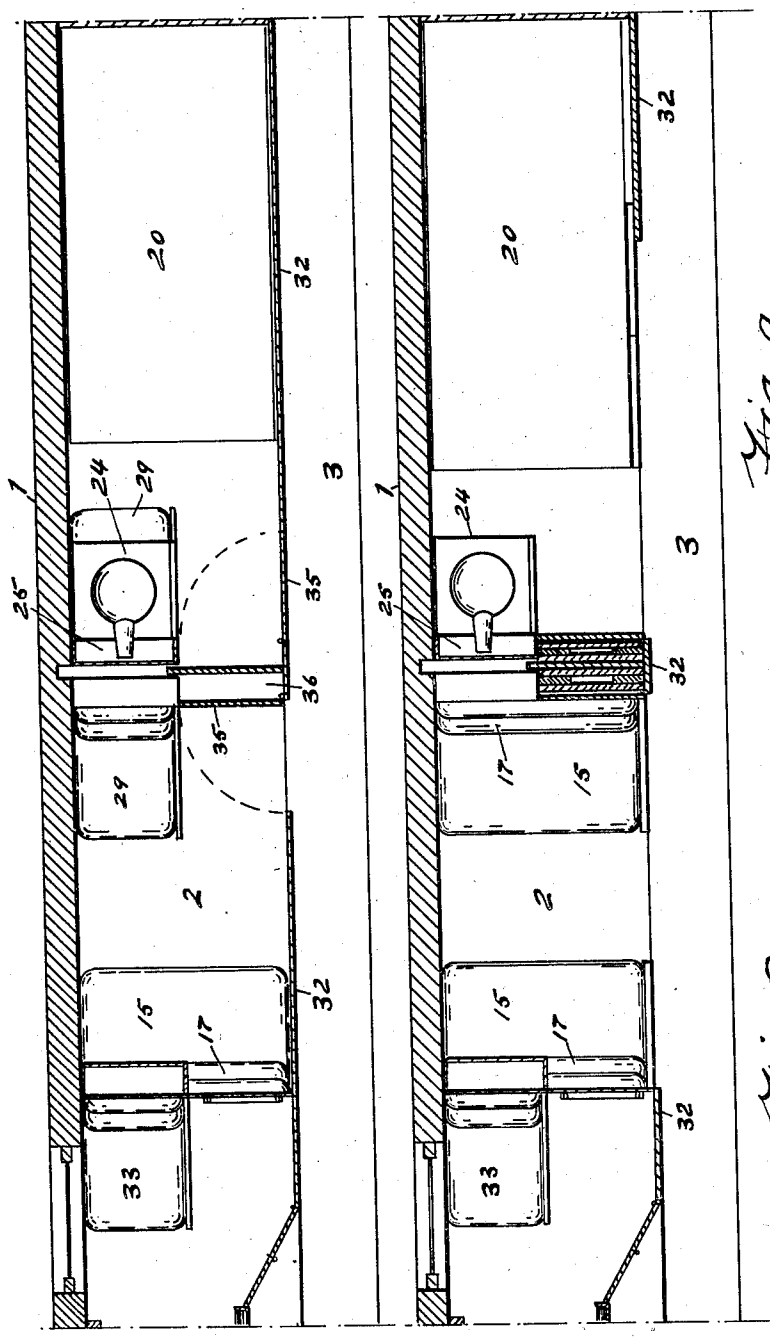

Fig. 6.

Fig. 7.

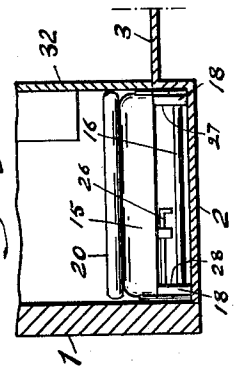

Fig. 9.

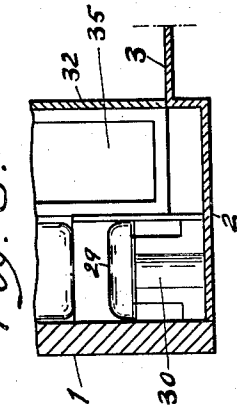

Fig. 8.

INVENTOR

Albert E. Hutt

Patented Oct. 23, 1934

1,977,881

UNITED STATES PATENT OFFICE

1,977,881

COMBINATION DAY AND SLEEPING RAILROAD COACH

Albert E. Hutt, Pelham, N. Y.

Application May 24, 1933, Serial No. 672,530

4 Claims. (Cl. 105—315)

My invention is an improvement on my pending United States patent application No. 637,705 filed October 14, 1932 and relates to a novel construction of railroad coach in which the present inconveniences and discomforts of the conventional so-called Pullman coach are eliminated.

My invention consists of a novel construction of railroad coach having a central longitudinal aisle or passageway and individual compartments on each side of said aisle for each passenger, such compartments being so constructed and disposed that when used as sleeping quarters, there is provided, besides the berth, a space where the passenger can dress and undress in a standing position, and there is provided an individual wash bowl and toilet for his use, thus doing away with the necessity of providing a common wash room at each end of the coach.

My invention further consists of the same novel arrangement of compartments so constructed and located that half of their number are located in a position above the other half of said compartments in such manner that the standing portions of the upper compartments are above the sleeping portions of the lower compartments, and the standing portions of the lower compartments are below the sleeping portions of the upper compartments, it being possible by this method to provide head clearance for the average passenger in the standing portions of both the upper and lower compartments.

My invention further consists of a novel means of providing floors to the lower compartments on a lower level than the floor of the central longitudinal aisle.

My invention further consists of seats mounted on trucks located on the floor of the lower compartments and capable of longitudinal movement with respect to the coach.

My invention further consists of means for locking said trucks in desired positions.

My invention further consists of seats attached to said trucks in such manner that when converted into a bed the level of the bed thus formed is on a lower level than the level of said seats.

My invention further consists of means for locking said seat members in position when used as seats to prevent their collapsing into a bed.

My invention further consists of providing seats in the standing portions of the upper compartments so as to eliminate the necessity of the upper compartment passengers having to share the seats in the lower compartments thus providing individual privacy in both the upper and lower compartments in the day time as well as at night.

My invention further consists of permanent bed sections in the lower compartments which together with the seats and seat backs are used to make up a bed.

My invention further consists of longer permanent bed sections in the lower compartments so that these sections together with one seat and one seat back will make up a bed.

My invention further consists of a single seat in the lower compartments located over the toilet and which remains a seat when the bed is made up.

With all these objects in view, my invention consists of the novel construction hereinafter described and finally claimed.

For the purpose of illustrating my invention I have shown in the accompanying drawings two forms thereof which are at present preferred by me, although it is to be understood that the various instrumentalities of which my invention consists can be variously arranged and organized and that my invention is not limited to these precise arrangements and organizations of the instrumentalities as herein shown and described.

The nature, characteristic features and scope of this invention will be more fully understood from the following discription taken in connection with the accompanying drawings forming part thereof and in which:—

Fig. 1 represents a longitudinal sectional view of two so-called sections of a railroad coach embodying my invention, the section being taken through the center line of the aisle; the outside seat ends having been left off and parts of the partition between the compartments and the aisle having been broken away to more clearly show the seats and their coacting parts.

Fig. 2 represents a fragmentary sectional view taken on the line 2—2 of Fig. 1. The seat ends being shown in this view.

Fig. 3 represents a fragmentary sectional view taken on the line 3—3 of Fig. 1. The seat ends being also shown in this view.

Fig. 4 represents a bottom view of the truck or chassis on which are mounted the seats.

Fig. 5 represents another longitudinal sectional view of two so-called sections of a railroad coach embodying my invention, the section being taken through the center line of the aisle, parts of the partition between the compartments and the aisle having been broken away to more clearly show the interior arrangement which differs in some respects from those shown in Fig. 1.

Fig. 6 represents a plan view taken on the line 6—6 of Fig. 5.

Fig. 7 represents a plan view taken on the line 7—7 of Fig. 1.

Fig. 8 represents a fragmentary sectional view taken on the line 8—8 of Fig. 5.

Fig. 9 represents a fragmentary sectional view taken on the line 9—9 of Fig. 5.

Figs. 1 and 5 each represent two so-called sections of a railroad coach, each section comprising both an upper and a lower compartment. The seating arrangement, the method of making up the beds and also the method of closing the lower compartments being different in each case.

Referring now to the drawings and particularly to Figs. 1, 2, 3, 4 and 7. The numeral 1 designates the outside wall of the coach, 2 the floor of the lower compartments and 3 the central aisle. 4 designates trucks equipped with the wheels 5, 6, 7, 8, 9 and on which are mounted the bed rests 10, 11, 12 and 13. 14 designates seat supports, one end of each of which is revolvably mounted on the seats 15 and the other end in the bed rests 10, 11, 12 and 13. Those mounted on the front end of the seats being fixed at their lower ends to the rods 16 so that they will revolve in unison. 17 designates seat backs hinged to the seats 15. 18 designates bed rests attached to the seats 15. 19 designates bed sections attached to the bed rests 12 and 13. 20 designates a mattress shown stored out of the way in the lower compartment to the left of Fig. 1 and in use in the lower compartment to the right of Fig. 1. 21 designates an inside seat end attached to the truck 4 and disposed to slide longitudinally in the outer wall of the coach. 22 designates a lock to enable the inside seat end 21 and therefore the truck 4 to be locked in either the position shown to the left of Fig. 1 or to the right of Fig. 1. 23 designates toilets located in the lower compartments and 24 wash basins disposed to fold away into the recesses 25. 26 represents bolts disposed to hold the seats 15 in the position shown to the left of Fig. 1 and in Fig. 2.

It will therefore be seen that when it is desired to convert the lower compartment to the left of Fig. 1, which is shown made up for day use, into a compartment for night use as shown in the lower compartment to the right of Fig. 1, all that is required is to disengage the bolt 26 under the seat 15 which is not over the toilet 23, next pull the seat 15 forwardly until the bed rest 18 rests on the truck 4 allowing the seat back 17 to rest on the bed rests 12 and 13, then unlock the lock 22 and slide the truck 4 under the standing portion of the upper compartment and lock it again in this position, next disengage the bolt 26 under the other seat 15 and pull said seat 15 forward until it and its attached seat back 17 also lie in the same plane as the other seat and seat back, after which the mattress 20 is placed in position. The bed thus formed being as shown in the lower compartment to the right of Fig. 1.

Referring now to Figs. 5, 6, 8 and 9 it will be noticed that the truck 4 referred to in the foregoing description is omitted and that the bed rests 27 and 28 are fixed to the floor 2 of the lower compartment, also that a single seat 29 is hinged to the toilet 30 so that the toilet may be used by tipping back the seat 29. It will also be noticed that the bed sections 31 are made longer than the bed sections 19 in Fig. 1, also that the removable panels shown in Fig. 1 and which are used to close the lower compartments from the aisle are omitted and the permanent wall section 32 between the compartments and the aisle is extended to take their place. 33 designates seats over the toilets 34 in the upper compartments similar to the seats over the toilets in the lower compartments. 35 designates doors disposed to close either the recesses 36 in the lower compartments or to close the lower compartments themselves from the central aisle.

It will be apparent from the drawings that the lower compartment to the left of Fig. 5 which is set up for day use can be readily converted for night use as shown in the lower compartment to the right of Fig. 5 as follows: First the bolt 26 (see Fig. 9) is disengaged from under the seat 15, then the seat 15 is pulled forward until the bed rests 18 rest on the floor 2 and the seat back 17 rests on the bed rests 27 and 28, then the mattress 20 is pulled out from under the standing portion of the upper compartment and laid on the bed section 31, seat 15 and seat back 17 thus forming a bed as shown to the right of Fig. 5.

With this arrangement it will be seen that the toilet and wash basin are available in the lower compartments whether they be made up for day or night use which is not the case in the arrangement shown in Fig. 1 where the toilet and wash basin can only be used when the compartment is made up for night use, also that two adjacent lower compartments can be interconnected in the day time as well as at night, whereas the arrangement shown in Fig. 1 only permits intercommunication when the berths are made up for night use.

The recesses used to store the removable panels in Fig. 1 can be used as clothes closets in Fig. 5.

I am aware that my invention may be embodied in other specific forms without departing from the spirit or essential attributes thereof and I therefore desire the present embodiment to be considered in all respects as illustrative and not restrictive, reference being had to the appended claims rather than to the foregoing description to indicate the scope of the invention.

Having thus described my invention, what I claim as new and desire to secure by Letters Patent is:—

1. In a passenger railroad coach, a central longitudinal aisle, upper and lower compartments on each side of said aisle the upper compartments being positioned above the lower compartments, the floor of said lower compartments being below the level of said aisle, upper and lower compartments having each a standing section in which the height is greater than that of the average standing passenger and a reclining section in which the height is less than that of the average standing passenger, seats provided in said upper compartments, a toilet under said seats, collapsible wash basins in said upper compartments, permanent beds in said upper compartments, seats in said lower compartments, toilets under one of said seats, collapsible wash basins in said lower compartments and means for converting said seats into beds, the resulting beds being on a lower level than said seats.

2. In a passenger railroad coach of the type described, upper and lower compartments, trucks located on the floor of the lower compartments, said trucks being disposed to move longitudinally in said compartments, seat members mounted on said trucks, said seat members being disposed to be converted into seats or into beds on a lower level than said seats, means for locking said seat members into position as seats and means for locking said trucks in a plurality of positions.

3. In a passenger railroad coach of the type

described, upper and lower compartments, toilets in said lower compartments, seats movably mounted on said toilets, other seat members in said lower compartments attached to the floor of said compartments, permanent bed sections attached to the floor of said lower compartments, said seat members being disposed to be converted into a seat on a higher level than said permanent bed sections, said seat members together with said permanent bed section being disposed to form a bed on the same level as said permanent bed section, a partition between said lower compartments and the central aisle, a door located in said partition to close the compartment at any time and means for locking said seat members in position to form a seat.

4. In a passenger coach, a longitudinal aisle, upper and lower compartments accessible from said aisle, the upper compartments being positioned above the lower compartments, the floor of said lower compartments being below the level of said aisle, upper and lower compartments each having a standing section in which the height is greater than that of the average standing passenger and a reclining section in which the height is less than that of the average standing passenger, seats provided in said upper compartments, toilets under said seats, wash basins in said upper compartments, a plurality of seats in said lower compartments, toilets under one of said seats, wash basins in said lower compartments, permanent bed sections in said lower compartments and means for converting said bed sections in conjunction with one of said lower compartment seats into a bed.

ALBERT E. HUTT.