No. 633,976. Patented Sept. 26, 1899.

M. G. CHACE.

LOOM.

(Application filed Apr. 7, 1898.)

(No Model.) 6 Sheets—Sheet 1.

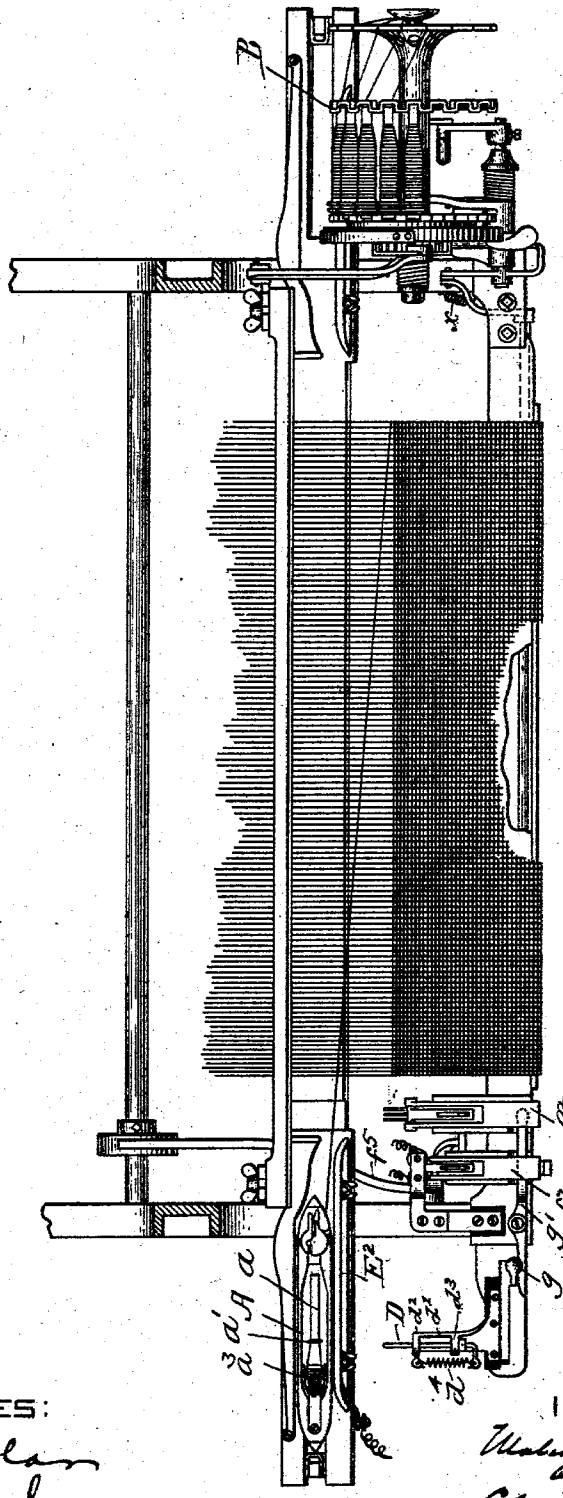

Fig. 1.

WITNESSES:

J. M. Dolan

G. A. Walsh

INVENTOR:

Malcolm G. Chace

by his attys

Clarke & Raymond

THE NORRIS PETERS CO., PHOTO-LITHO., WASHINGTON, D. C.

No. 633,976. Patented Sept. 26, 1899.

M. G. CHACE.

LOOM.

(Application filed Apr. 7, 1898.)

(No Model.) 6 Sheets—Sheet 2.

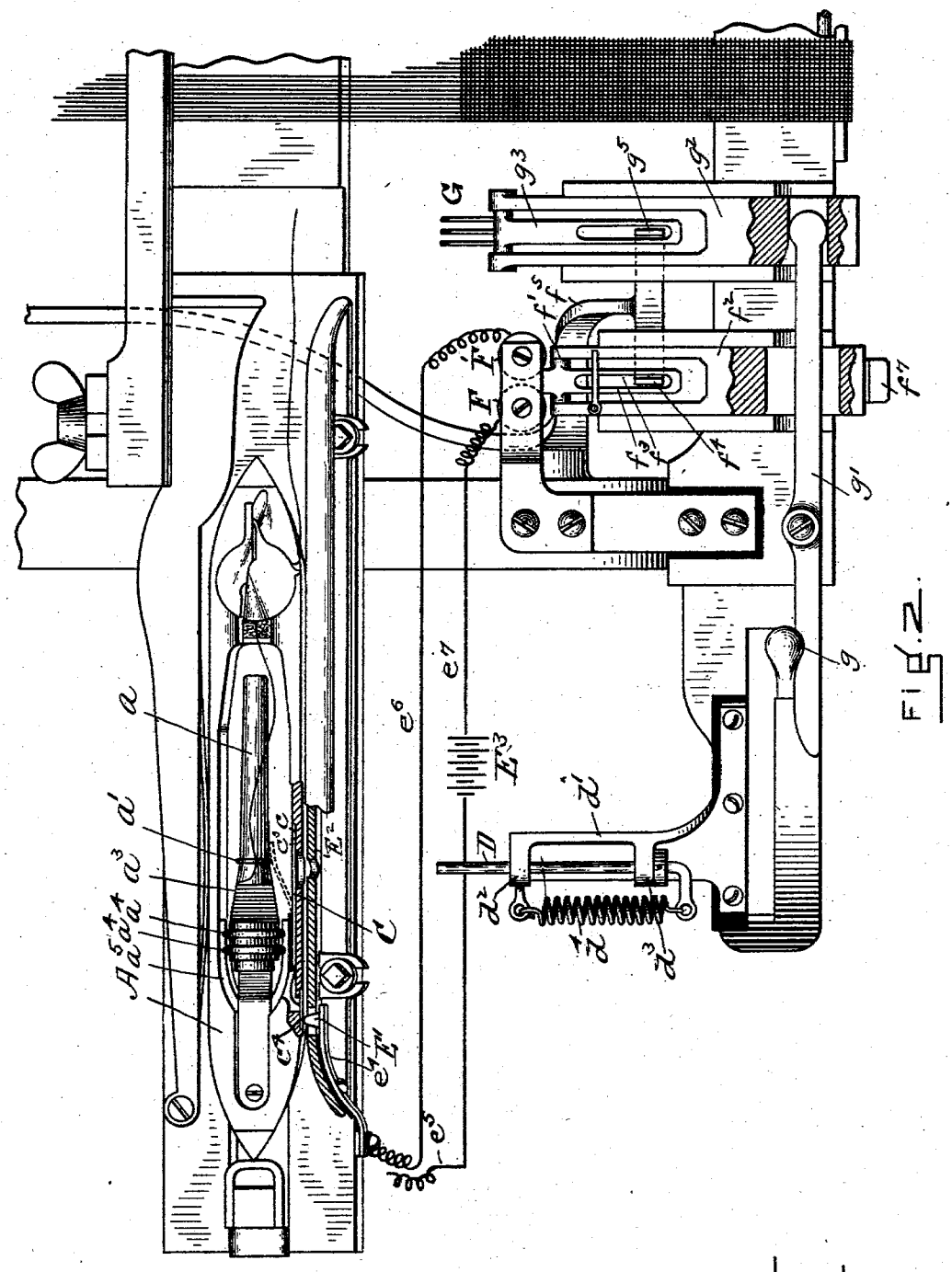

FIG. 2.

WITNESSES:

J. M. Dolan.

L. A. Hall

INVENTOR:

Malcolm G. Chace

by his attys

Clarke & Raymond

THE NORRIS PETERS CO., PHOTO-LITHO., WASHINGTON, D. C.

No. 633,976. Patented Sept. 26, 1899.

M. G. CHACE.

LOOM.

(Application filed Apr. 7, 1898.)

(No Model.) 6 Sheets—Sheet 3.

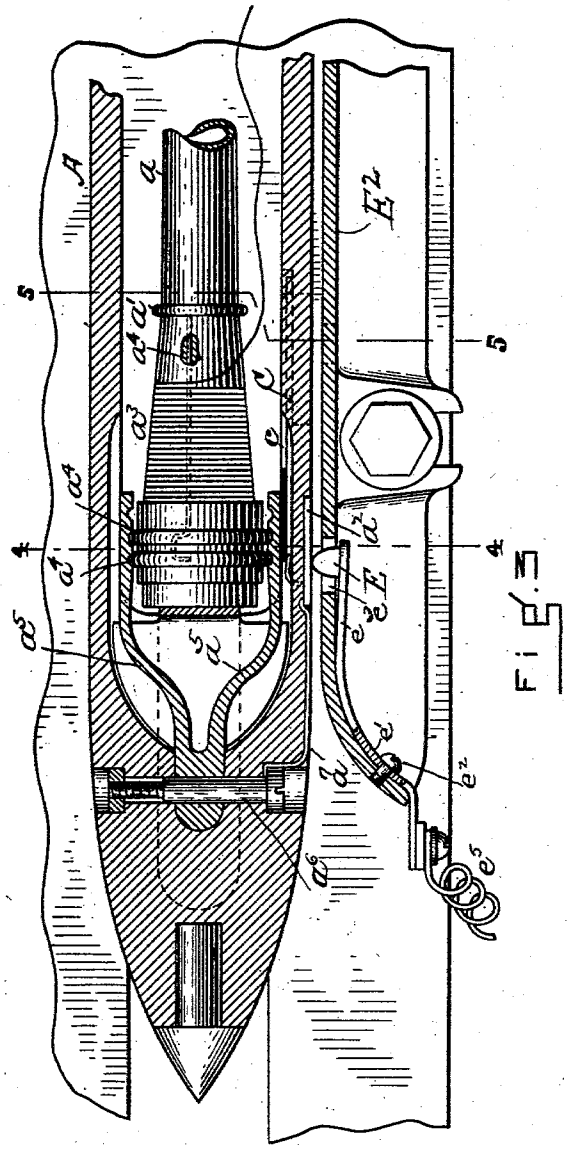

Fig. 3.

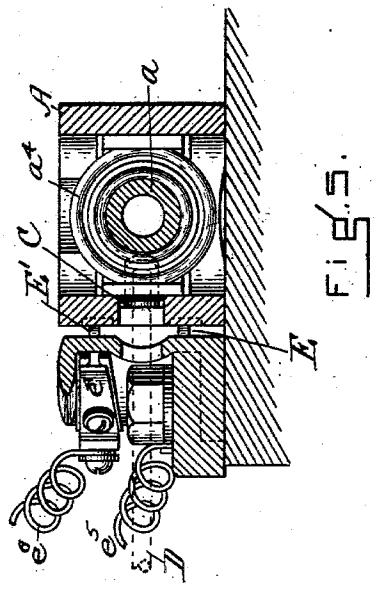

Fig. 5.

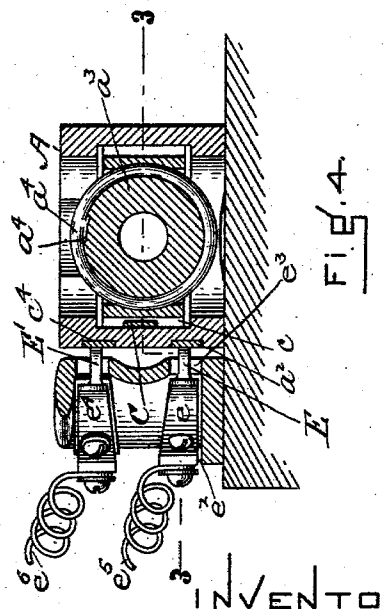

Fig. 4.

WITNESSES:

J. M. Dolan.

L. A. Walsh

INVENTOR:

Malcolm G. Chace

by his atty

Clarke & Chace.

THE NORRIS PETERS CO., PHOTO-LITHO., WASHINGTON, D. C.

No. 633,976. Patented Sept. 26, 1899.

M. G. CHACE.

LOOM.

(Application filed Apr. 7, 1898.)

(No Model.) 6 Sheets—Sheet 4.

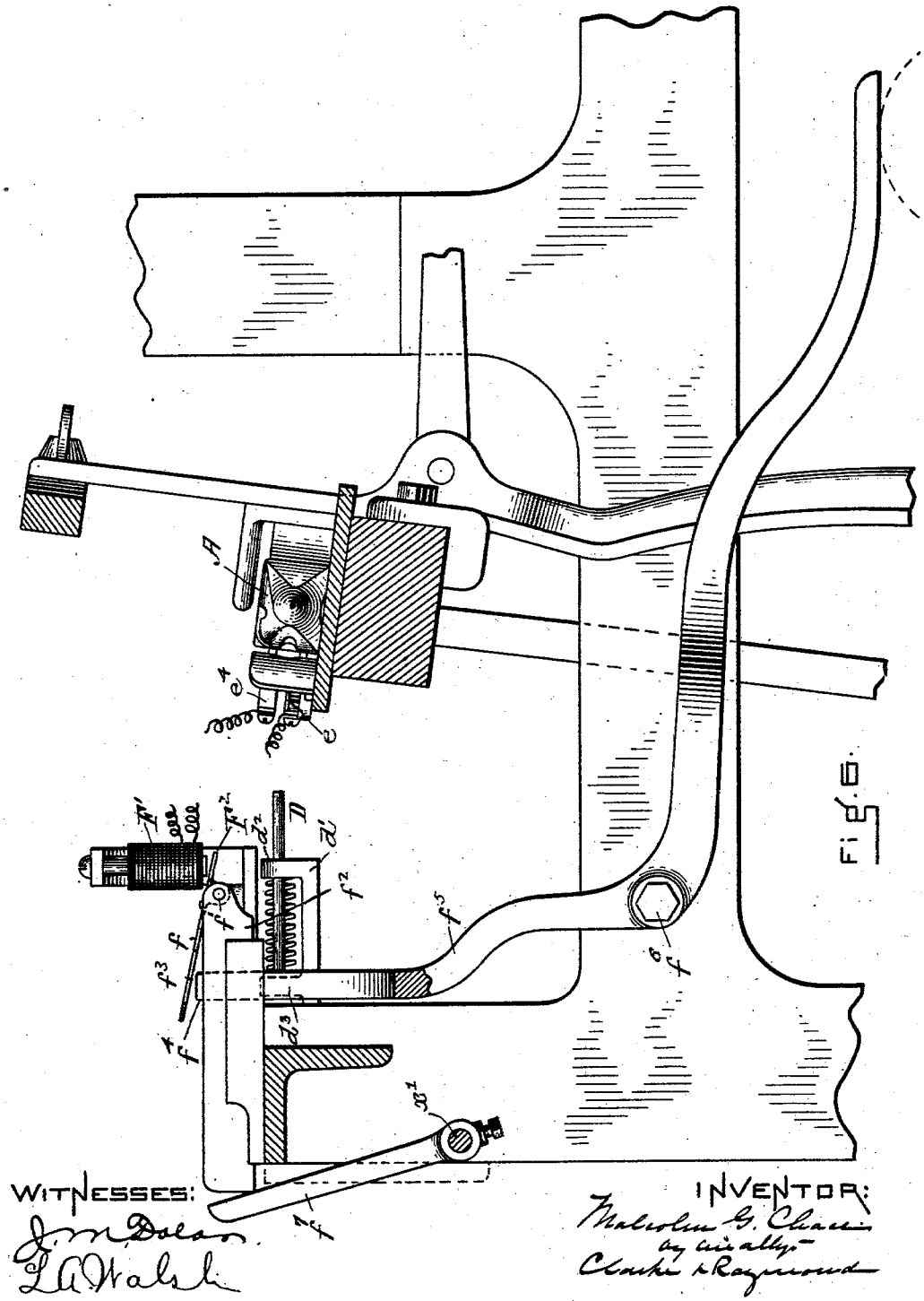

Fig. 6.

WITNESSES:

J. M. Dolan

L. A. Walsh

INVENTOR:

Malcolm G. Chace

by his atty

Clarke & Raymond

THE NORRIS PETERS CO., PHOTO-LITHO., WASHINGTON, D. C.

No. 633,976. Patented Sept. 26, 1899.

M. G. CHACE.

LOOM.

(Application filed Apr. 7, 1896.)

(No Model.) 6 Sheets—Sheet 5.

Fig. 15.

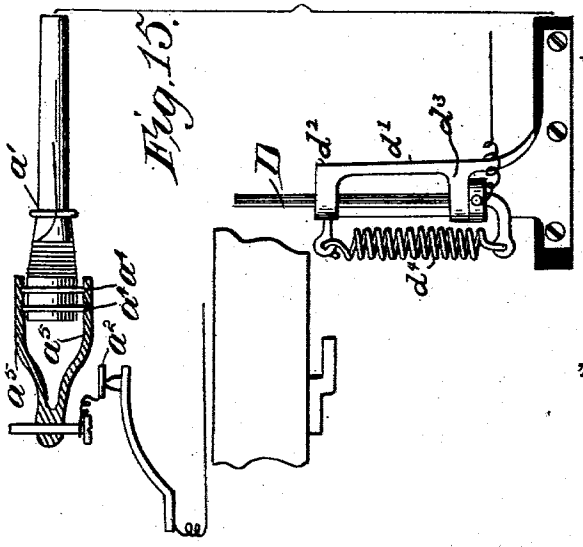

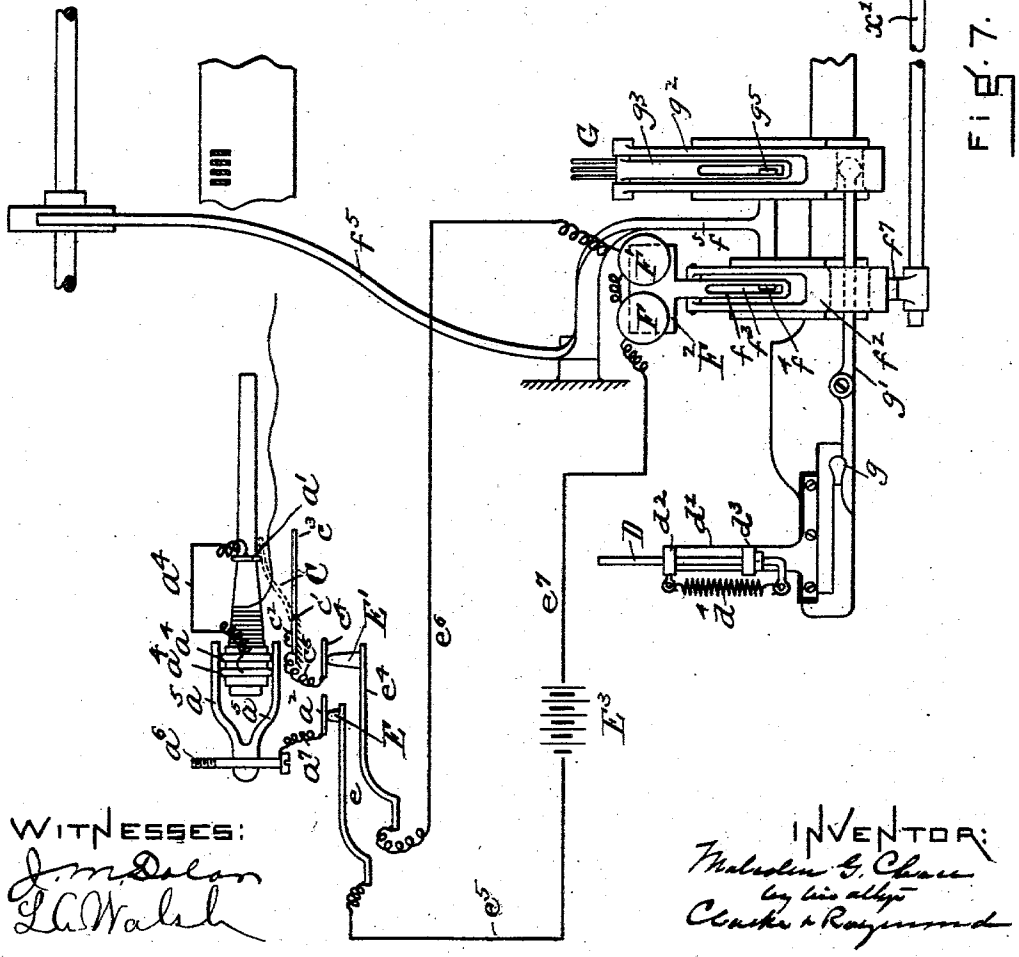

Fig. 7.

WITNESSES:

J. M. Dolan

L. A. Walsh

INVENTOR:

Malcolm G. Chace

by his attys

Clarke & Raymond

THE NORRIS PETERS CO., PHOTO-LITHO., WASHINGTON, D. C.

No. 633,976. Patented Sept. 26, 1899.

M. G. CHACE.

LOOM.

(Application filed Apr. 7, 1898.)

(No Model.) 6 Sheets—Sheet 6.

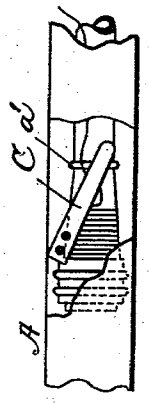

Fig. 12.

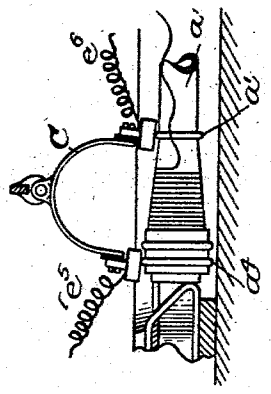

Fig. 14.

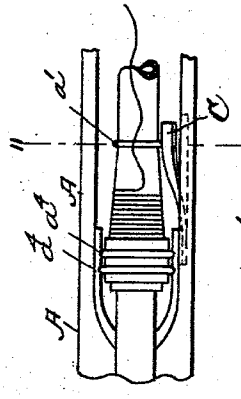

Fig. 10.

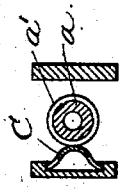

Fig. 11.

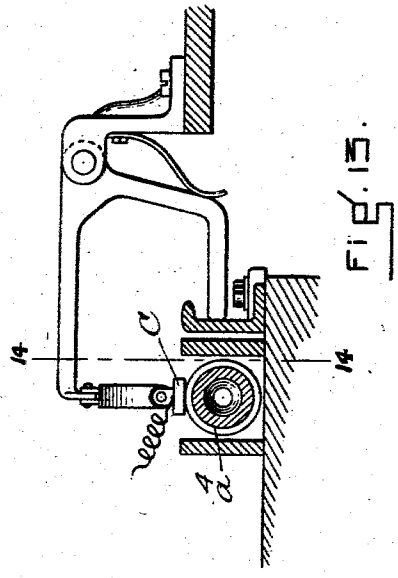

Fig. 13.

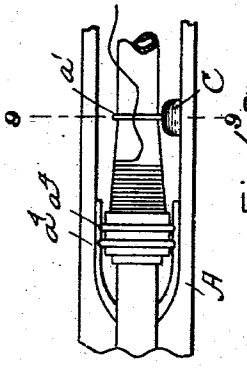

Fig. 8.

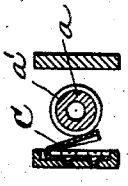

Fig. 9.

WITNESSES:

J. M. Dolan

L. A. Hatch

INVENTOR:

Malcolm G. Chace

by his Attys

Charles E. Raymond

THE NORRIS PETERS CO., PHOTO-LITHO., WASHINGTON, D. C.

UNITED STATES PATENT OFFICE.

MALCOLM G. CHACE, OF CENTRAL FALLS, RHODE ISLAND, ASSIGNOR OF SEVENTEEN-TWENTIETHS TO WILLIAM H. BAKER AND FREDERIC E. KIP.

LOOM.

SPECIFICATION forming part of Letters Patent No. 633,976, dated September 26, 1899.

Application filed April 7, 1898. Serial No. 676,722. (No model.)

To all whom it may concern:

Be it known that I, MALCOLM G. CHACE, a citizen of the United States, residing at Central Falls, in the county of Providence and State of Rhode Island, have invented a new and useful Improvement in Looms, of which the following is a full, clear, and exact description, reference being had to the accompanying drawings, forming a part of this specification, in explaining its nature.

The invention is an improvement upon the type of loom using an automatic filling-changing mechanism, sometimes known as a "battery." This filling-changing mechanism is ordinarily made to automatically "transfer" a full filling carrier or shuttle and to eject an empty filling carrier or shuttle by the operation of a filling-finger so arranged that an absence of filling causes it to work. This absence of filling may happen from two causes—first, from the running out of the filling-supply in the shuttle, and, second, from the breaking of the filling. In either case it is absence of filling that causes the filling-changing mechanism to transfer. During this detecting of the absence of filling and the supplying of the same the loom runs continuously. Therefore it will be seen that for a space of time measured from the instant of detecting to the instant of supplying the loom runs without filling. Add to this the space of time from the running out or breakage of filling to the instant of the detection of the same and there will be obtained the entire possible running-time of the loom without filling. In practice this may be from less than one pick to two and three-quarters or possibly three, and this causes the weaving of a thin place in the cloth and in all but the rougher grades of goods necessitates the making of "seconds."

In spinning yarn onto a bobbin or cop on account of the method of doffing and twisting-on in vogue the first few winds of yarn are liable to be wound on unevenly and matted together, and when this uneven end comes to weave off in the loom instead of weaving off in a single thread it comes off double or in a bunch, technically called "fluxy" filling, and with the method of actuating the filling-changing mechanism above referred to, since the filling-finger does not act till the filling is run out or is broken, which is unusual, this bunch of fluxy filling weaves into the cloth at the end of every bobbin or cop, causing seconds to be made by this means quite as much as by thin places in the cloth due to the absence of filling. An attempt has been made to overcome these objections by the employment of a device that shall anticipate the running out of the filling. In all the ways for accomplishing this of which I have knowledge there is a filling feeler or dagger which feels the filling at certain intervals. If the filling is woven off to an agreed point, this feeler or dagger not having the yarn to strike against in the same position as when the filling is new receives a different motion itself, and a mechanism is so arranged that by this different motion so received the filling is automatically changed. Were a loom a positive mechanism this would be satisfactory; but from the nature of a loom, since the shuttle is thrown and caught every pick, the travel of the shuttle is not always the same, and the position of the shuttle in the box therefore varies. The finger or dagger being at a fixed position as regards the box—that is, in respect to longitudinal movement—as much as the shuttle varies in position in the box so much it varies in position to the dagger. It is necessary that the dagger feel the filling delicately enough to tell when there is but about one-eighth of an inch of wound filling left. The variation of the shuttle in the box is liable to be three-quarters of an inch. Therefore it will be seen that a filling-feeler whose function it is to feel to within about one-eighth of an inch is not of use when the yarn left varies in position a greater amount. There is no doubt, however, that a perfect-working device for anticipating the running out of the filling is advantageous over the old form of filling-finger, first, because the automatic device for supplying filling instead of being put in action immediately after absence of the filling is detected anticipates the running out of the filling and delivers a new supply, at the same time throwing out the old supply, which is almost exhausted, there-

by insuring that the loom shall always be supplied with filling and thin places in the cloth and lost picks will be prevented; second, because by causing the running out of the filling to be sufficiently anticipated a new supply of filling is delivered before the bobbin or cop is woven down to the place where the filling is liable to come off in bunches, causing fluxy filling in the cloth before mentioned. My invention accomplishes these desirable results and others, not, however, mechanically, but by providing the shuttle and filling, or either, with portions of an electric circuit and a circuit maker and breaker and by also at the outward end of a pick or movement of the shuttle, preferably every other one, causing said portions of the electric circuit to be momentarily connected with other portions of an electric circuit carried upon a stationary part of the loom and extending to a battery or source of electric energy and to a magnet, but which circuit is inoperative and incomplete at the instant of the engagement of the movable and stationary parts thereof unless the circuit maker and breaker shall have been allowed to make a continuous circuit. When this occurs, the magnet will become energized and through an armature and connecting mechanism will operate or permit of the operation of the filling-changing mechanism.

In the drawings, Figure 1 is a view, principally in plan, of a loom having the features of my invention. Fig. 2 is a view in plan, enlarged, of the side of the loom opposite the filling-changing mechanism and representing my invention. Fig. 3 is a view in horizontal section, enlarged, upon the dotted line 3 3 of Fig. 4. Fig. 4 is a view in vertical cross-section, enlarged, upon the dotted line 4 4 of Fig. 3. Fig. 5 is a view in vertical cross-section, enlarged, upon the dotted line 5 5 of Fig. 3. Fig. 6 is a view of the loom, enlarged, in vertical section inside of the loom side and looking toward the left hand of the loom. Fig. 7 is a view in the nature of a diagram to further illustrate the construction and operation of my invention. Figs. 8 to 14 represent modified forms of circuit makers and breakers or means for opening and closing a circuit. Fig. 8 shows a circuit maker and breaker that is attached to the inner side of the shuttle near its top and is adapted because of its spring nature to constantly maintain a contact with the yarn until the yarn has been unwound sufficiently to permit it to come into contact with the contact-plate carried by the spindle. Fig. 9 is a view upon the dotted line 9 9 of Fig. 8. Fig. 10 represents a spring-contact maker and breaker of similar nature. Fig. 11 is a section thereof upon the dotted line 11 11 of Fig. 10. Fig. 12 represents a modification of the circuit maker and breaker of Figs. 8 and 10. Fig. 13 is a view of a similar spring-contact maker and breaker which makes both contacts directly with the bobbin or filling-holder and does away with any circuit in the shuttle. Fig. 14 is a view of said contact maker and breaker upon the dotted line 14 14 of Fig. 13. Fig. 15 is a view illustrating slight modifications, to which reference is hereinafter made.

Referring to the drawings, A represents the shuttle, which is of any desired type.

B represents the battery or means for automatically supplying filling to the shuttle and removing the spent carrier therefrom.

a is the bobbin. It may be of metal or it may be of wood. In the drawings it is represented as made of wood and as having a contact point or section a', of metal, which is connected in a manner to form a portion of a circuit with the metal plate a^2 on the outer side of the shuttle. This metal contact point or section a' may be of any desired shape and may be arranged at any convenient point upon the bobbin. I prefer that it be in the form of a ring encircling the bobbin near its lower end a^3 and arranged to project slightly from the surface of the bobbin, as a metal contact-surface is thus formed which extends continuously around the bobbin and does not require any special placing of the bobbin in the shuttle or any change in the handling of the bobbin in the battery. The portion of the circuit between the metal contact-ring a' and the plate a^2 may be obtained in any desired way, and I have shown it as provided by a wire a^4 in the bobbin, conventionally shown in the diagram of Fig. 7, connecting the contact-ring a' with the bobbin metal jaw-rings a^4. These rings continue the circuit to the metal jaws a^5 of the shuttle, which connect with the metal screw a^6, which is connected with the contact-plate a^2 by the wire a^7. The circuit connecting the contact-ring a' with the plate a^2 may be obtained in any other desired way. There is also carried by the shuttle the circuit maker and breaker C. This is represented in the form of a thin flat metal spring which is contained in a shallow recess c in the inner side of the shuttle-cavity and the end c' of which is fastened by a screw c^2 to said side. This spring is normally flat and contained in the recess and is shielded or guarded by the shuttle side. Its free end c^3 is movable at the end of the outward (away from the battery) movement of the shuttle and as the shuttle approaches the end of the box by a contact-making push-rod D, which is yieldingly held as against lengthwise pressure and which serves upon the contact of its end with the outer side of the spring C to cause the free end of said spring or circuit maker and breaker to be moved inward toward the contact-ring a'. The tension of the spring forming the contact maker and breaker normally holds the contact maker and breaker away from said contact-ring a', and a contact cannot be established with it so long as it is covered by yarn. When, however, the yarn has been woven from the bobbin sufficiently to leave but a relatively small amount upon the bobbin be-

low the ring a contact between the circuit maker and breaker and the ring is established, and the electric current is then free for an instant, or so long as the contacts of the shuttle are maintained with the stationary contacts, to energize the magnet and cause the operation of the battery. The circuit maker and breaker is connected with the shuttle contact-plate c^4 by the wire c^5, extending from the fixed end of the spring to the contact-plate c^4, which, like the contact-plate a^2, is upon the front side of the shuttle. It will thus be seen that there is established in the shuttle an electric circuit and a circuit maker and breaker and that the circuit is interrupted in the filling-carrier by the yarn thereon and maintained interrupted by the said yarn until it is desired that the circuit shall be established, and that, as represented, the circuit may be established while there yet remains upon the filling-carrier the imperfect end of the yarn above referred to plus enough yarn to make three or four picks after the contact has been established.

I do not confine myself to the specific means herein described for providing the shuttle and filling-carrier, or either, with a portion of an electric current and a circuit maker and breaker, as there are many other ways besides the one which I have described for accomplishing this object, and these ways vary according to the type of shuttle and bobbin or cop-spindle employed. It is also necessary that the shuttle have two contact plates or surfaces which shall be so located or arranged as to make contact at the end of each outward throw of the shuttle with contact-points at the ends of the main sections of the electric circuit, meaning by "main sections" those parts which are not within the shuttle and bobbin. In the drawings these shuttle contact-plates are lettered a^2 and c^4 and one is connected with the contact-ring a' and the other with the circuit maker and breaker C. It is of course necessary that one or the other of the two electric lines or sections in the shuttle be insulated. These contact-points may be of any desired length, and they may be arranged in the same horizontal line or one above the other, as preferred. They are made of a length sufficient to always insure a contact with their coöperating contact-points E E′ regardless of any variation in the position of the shuttle at the end of its throw, and this I consider to be an important feature of my invention.

The contact-point E projects outward from the face of the box-plate E^2 (see Fig. 3) to any desired extent. It is attached to the outer end of a flat metal spring e, which is fastened at its fixed end e' to the box-plate by a screw e^2 and upon the face opposite that from which the point extends, the box-plate having a hole e^3, through which the point passes. The spring e serves to press the point outward from the face of the plate and to hold it with a yielding pressure. The point E′ extends through a similar hole in the box-plate and projects from its face in a similar way and is held at the free end of a similar spring e^4, which is secured at its fixed end to the box-plate. These points project sufficiently from the face of the box-plate to receive the contact-plates a^3 c^4 of the shuttle as the shuttle is moved toward them at the end of its outward movement, thereby continuing the electric circuit from the shuttle to the main part of the loom, the circuit being established and continuing so long as the said contact-plates and said points remain in touch, but not being operative, of course, unless the the circuit maker and breaker is in contact with the ring a'.

The yielding contact-point E is connected with the battery E^3 by its spring-holder e and the wire e^5. The yielding contact-point E′ is connected with the magnets F F′ by means of its spring-holder e^4 and the wire e^6. The battery is connected with the magnets by the line e^7. Placed in operative relation to the magnets is the armature F^2. (See Fig. 6.) This armature is at one end of a lever f, which is pivoted at f' to a slide-block f^2. This armature-lever has at its end a slot f^3, which is over the oscillating end f^4 of an oscillating lever f^5, pivoted at f^6 to the loom side and oscillated in the usual way by a cam on the cam-shaft. At the end of the slide f^2 is a finger f^7, which is pressed by means of a spring x, (shown in Fig. 7,) against the end of the slide. This finger is connected by means of a rod x', to which it is attached, to a catch x^2 on the automatic filling-changing mechanism, so that when this finger is moved outward by the slide it throws the catch up into position to be struck by the bunter on the lay. This striking of the catch by the bunter is the force which causes the transferrer to deliver the new supply of filling, or, in other words, causes the automatic filling-changing mechanism to work. The automatic filling-changing mechanism represented in Figs. 1 and 7 is well known, and it is not necessary to more fully describe it and its operation here. The energizing of the magnet causes the slotted end of the armature-lever to be moved downward until the oscillating end f^4 of the lever has entered the slot f^3, when the continued oscillation of the lever will cause the slide f^2 to be moved forward or outward sufficiently to actuate the finger or lever f^7. The spring x, holding the finger or lever f^7 against the slide, serves to return the slide to its original position after the armature-lever has become detached from the oscillating lever. The armature-lever, being pivoted to the slide, is drawn forward by the oscillating lever f^5 with the slide, and on its backward movement, the magnet having become inert, is disengaged from the end of said oscillating lever by lifting therefrom, the lever being overbalanced, the armature end being heavier than the slotted end. I would say that the said oscillating lever f^5, slide f^2, and finger or lever f^7

and its connections are the same as those now commonly used in this class of loom, and their operation and connection with the battery and the construction of the battery need not further be described here.

I would further say that I do not confine myself to any especial connections between the actuating-armature and the battery or automatic filling mechanism. The push-rod D is preferably mounted upon the bracket d' to have the separated bearings d^2 d^3, and a spring d^4 is connected with it to hold its end d in an advanced position and to permit it to yield backward slightly upon each impact of the shuttle circuit maker and breaker C therewith. I would further say that I do not confine myself to this means for actuating the circuit maker and breaker, as the spring forming the circuit maker and breaker instead of always acting to open the circuit may always act to close the same, so that the filling upon the bobbin serves to hold it open, and the removal of said filling permits it to close to make the necessary contact with the bobbin contact ring or plate. In Fig. 9 I have represented one form of the spring when so used, the said spring being represented as attached at the upper edge of the shuttle side to extend downward therefrom and also being made to follow the filling to the contact-point on the filling-carrier.

In Fig. 11 the spring is represented as extending longitudinally on the inside of the shuttle and as being made to follow the filling to the contact-point and as having its ends curved outwardly. It is necessary to provide the spring when so used with a shape or construction which shall not interfere with the automatic placing of the filling-carrier in the shuttle or its automatic removal therefrom or which shall not catch the yarn or disturb its tension.

I would further say that the invention is just as applicable to the form of battery feeding the complete shuttle and filling-carrier as it is to the type which feeds the filled carrier to a common shuttle.

While I have shown my invention as applied to the end of the loom opposite that containing the automatic filling feeding and changing mechanism, I would not be understood as limiting it to this position, as it may be placed upon the same side as the said filling mechanism, if desired.

I have at some length illustrated various ways of making and breaking the electric circuit by the absence of yarn on the bobbin; but I do not wish thereby to give undue prominence to this part of the invention, but simply wish it to be understood that I do not confine myself to an especial means for practicing this part of the invention, as I consider that the broad or essential feature of the invention is that which involves the electric control by the filling and, however caused by it, of the time of operation of the automatic filling-changing mechanism of a loom.

I wish it to be understood that my invention may be used in conjunction with the usual mechanism or devices for stopping the loom upon the breaking of the filling-yarn, and I have represented in Figs. 1, 2, and 7 this mechanism, where G shows the usual feeling-fork, which is connected with the shipper-handle g by the shipping-lever g', the slide-block g^2, and filling-finger g^3, the filling-finger making engagement with the fork g^5 of the lever f^5, before referred to, and the said lever making engagement with the slide f^2, which operates upon its movement the battery-controlling mechanism by its fork g^3. (See Fig. 2.) It will be understood that the said lever operates through the slide g^2 to stop the loom and that it operates through the slide f^2 to set the battery or filling-changing mechanism in motion. In lieu of the connection established by the contact-point E' an electric connection may be established by the yielding rod D, in which event said rod would be in the circuit of the branch e^6 and would make electrical contact with the circuit maker and breaker C when it periodically touches it. (See Fig. 15.) In operation the filling is supplied by the automatic filling-feeding mechanism or battery in any of the usual ways—that is, either by filled shuttles or by filling-carriers—and the shuttle is thrown across the lay in the usual manner.

Where an independent filling-carrier is used with a common shuttle, a metallic contact is established between the filling-carrier and the shuttle as the carrier becomes seated in its holding-jaws. Where the filling-carrier is previously placed in a shuttle, the contact is established by said placing. In other words, there must reside in the shuttle and filling-carrier means whereby this metallic contact may take place between the parts upon the insertion of the filling-carrier into the shuttle. I therefore prefer that the metal holding-jaws of the shuttle should form one of the contacts and that some exposed metal part of the filling-carrier should form the other, and this metal part in the drawings is represented as provided by the ring a^4 at the butt of the filling-carrier. The shuttle preferably at every other pick and near the end of the pick establishes an electric contact for an instant with the device for controlling the time of the operation of the automatic filling-transfer; but the circuit in the shuttle is normally held open by the presence of the yarn on the filling holder or carrier and is not established until there has been such a removal of the yarn from the shuttle in weaving as shall permit the circuit to be closed. When the circuit is closed, an electric current traverses it at the instant the shuttle has made the electrical connection above referred to, and the magnet is then energized and the device set in operation.

It will be seen that there is an interrupted connection in the circuit between that portion which is carried by the shuttle and that

carried by the remainder of the loom due to the traversing of the shuttle and that there is also an interrupted connection between the shuttle and the filling-carrier due to the necessity for the removal and replacing of the filling-carrier.

Among the advantages of the invention I would mention as especially important that which enables the supply of unused yarn upon the filling-carrier to be definitely or accurately fixed in advance. I mean so far as the quantity required for filling the cloth before the bringing into play of the next shuttle or filling-carrier is concerned, so that it becomes impossible to weave thin cloth and impossible also to weave into the cloth the fluxy filling and which also provides for the sure operation of the battery or filling transfer at a predetermined interval, as whenever a contact is established in the shuttle by the removal of the yarn the device must be set in operation. In this connection I would say that the contact ring or piece on the filling-carrier may be so placed as to carry between it and the butt as much or as little yarn as it may be desired to have in reserve at the instant the filling-changing mechanism is started, and I would further say that when the contact-point is uncovered to permit of the closing of the electric circuit the automatic filling-carrier is caused to be operated whatever the position of the shuttle in respect to the box probably may be. I mean that the slight variations of the shuttle in its position at the end of its throw, which must necessarily occur from the fact that the throwing mechanism is not positive, will have no influence upon the operation of the device. This is due not alone to the fact that a positive means is provided in the shuttle for determining the time and place of action because of the closing of the electric circuit, but also because of the sliding or lateral contacts which are afforded by means of the relatively long contacting-plates upon the shuttle-body and by means of the long contact maker and breaker, it mattering not at all where these plates and the contact-maker come into contact with their operating-contacts.

Another advantage which arises from the employment of my invention is that no complicated trains of mechanism are required for making the connection between the arm and the lever which actuates the automatic filling-feeding mechanism, and the wear and other trouble consequent upon the use of the same are avoided, as of course it is well known that an electrical device is not only substantially free from this kind of wear, but is also much simpler.

I would also say that the electric contacts of the filling-carrier may be made with a contact maker and breaker carried directly by the loom and coming into contact therewith at the end of the outward movement of the filling-carrier and which contact-maker shall be controlled by the yarn, thus doing away with the portion of the electric circuit in the shuttle. Such a modification of my invention is illustrated in Figs. 13 and 14.

While I have shown in the principal views of the drawings the circuit as established by the shuttle-bobbin and a contact maker and breaker which makes intermittent or periodical contacts with the yarn, I would say that there may be used a circuit maker and breaker that maintains a constant contact with the yarn until the yarn has been unwound sufficiently to permit it to make connection with the contact point or ring of the filling-holder, and such a contact maker and breaker is represented in Figs. 8 to 12, inclusive, the essential element of the three modifications shown in these figures being that the contact maker and breaker shall have yielding relation to the filling, shall bear constantly against it, shall form a part of the circuit, and shall have its edges rounded and be provided with light tension to not interfere with the tension of the yarn or catch it as it is being unwound and also not interfere with the placing and ejectment of the filling-holder by the automatic mechanism for feeding the filling-holders.

In Figs. 13 and 14 another modification is shown to illustrate the many ways for opening and closing a circuit by the yarn, and in this modification the circuit is established by means of two circuit-makers, one of which is covered by the yarn and both of which eventually come into contact with the contact pieces or rings of the filling-holder. When the yarn so permits, the contact-points are carried upon yielding arms and the yielding arms are given an oscillating or reciprocating movement toward and upon the filling-holder at the end of every other pick of the shuttle and is removed upward from the shuttle by a spring.

Having thus fully described my invention, I claim and desire to secure by Letters Patent of the United States—

1. In a loom having an automatic filling changing or supplying mechanism, the combination of the said automatic filling changing or supplying mechanism and means for controlling the time of its operation, said means comprising an electrically-actuated device having its circuit extending through the shuttle and weft or filling carrier therein and a circuit maker and breaker operated by the filling or yarn of the weft-carrier, the said circuit being also made and broken by the throw of the shuttle.

2. In a loom having an automatic filling changing or supplying mechanism, the combination of the said automatic filling changing or supplying mechanism and means for controlling the time of its operation, said means comprising an electrically-actuated device having a circuit extending through the shuttle and weft-carrier, a circuit maker and breaker in the shuttle controlled by the yarn, separable contact-points forming a part

of the circuit carried by the shuttle and by a part of the loom with which the shuttle is brought into contact at or near the end of its movement, one pair of which contact-points is yielding with respect to the other pair, as and for the purposes described.

3. In a loom having an automatic filling mechanism, as a means of controlling the time of the operation of said automatic filling mechanism, an electrically-actuated device having a circuit extending through the shuttle and bobbin and a circuit maker and breaker carried by the shuttle and controlled by the yarn with contact-plates upon the shuttle forming a part of the circuit, and the box-plate having extending from its face yielding points or projections also forming a part of the electric circuit.

4. In a loom having an automatic filling mechanism, as a means of controlling the time of the operation of said automatic filling mechanism, an electrically-actuated device having a circuit extending through the shuttle and bobbin and a circuit maker and breaker controlled by the yarn or filling of the shuttle and also having two contact-plates forming a part of the circuit with the box-plate, having springs forming a part of the circuit, fastened thereto and points or projections upon the ends of said spring extending through holes in the box-plate and projecting from the surface of said box-plate to make yielding connection with the contact-plates of the shuttle as the shuttle is moved against the same.

5. In a loom having an automatic filling mechanism, as a means of controlling the time of the operation of said automatic filling mechanism, an electrically-actuated device having a circuit extending through the shuttle and weft-carrier, a circuit maker and breaker carried by the shuttle and comprising a spring-plate normally held from the yarn by the spring of the plate and intermittently moved toward the yarn, and a contact point or ring by an extraneous means with which the spring-plate is intermittently brought into contact as the shuttle approaches the end of its movement.

6. The combination with an automatic filling mechanism of a shuttle having a portion of an electric circuit provided with a contact maker and breaker, which circuit is adapted to be brought into connection with the remainder of a circuit including in its line a device for controlling the time of the operation of said automatic filling mechanism during the movement of the shuttle as the shuttle approaches one end of its movement, and a yielding push-rod with which the said contact maker and breaker comes into contact substantially simultaneously with the establishment of the full circuit by the shuttle.

7. In a loom having an automatic filling changing or supplying mechanism, the combination of said automatic filling changing or supplying mechanism, electrically-actuated means for controlling the time of its operation, a shuttle having two branches of an electric circuit the outer ends of which branches are exposed and the inner end of one branch of which is connected with metal jaws for receiving and holding a bobbin or yarn-holder, and the inner end of the other of which branches is connected with a contact maker and breaker, and a bobbin or yarn-holder having two contact rings or plates electrically connected, one of which makes contact with the said metal jaws, and the other of which makes contact with the contact maker and breaker upon the removal of yarn or filling from the bobbin.

8. In a loom having an automatic filling changing or supplying mechanism, the combination of said automatic filling changing or supplying mechanism and means of controlling the time of *its* operation, said means consisting of a magnet connected with said filling changing or supplying mechanism, and an electric circuit extending from the magnet adapted to be opened or closed by the presence or absence of yarn in the shuttle.

9. The combination in a loom, of a magnet, an electric circuit extending into the shuttle opened or broken by the yarn or filling, an armature mounted upon a slide and having a slotted end, a lever to move said slide when the armature makes an engagement therewith, and a second lever connected with the automatic filling mechanism adapted to be moved by said slide, as and for the purposes set forth.

10. In a loom, the combination of the oscillator f^5 having the forked ends f^4, g^5, the slides g^2 and f^2 connected respectively with the loom stop-motion and with the automatic filling-feeding mechanism, a movable yarn-feeding finger making connection between the said end g^5 and the slide g^2, an armature making connection with the fork f^4 and the slide f^2, a magnet and an electric circuit connecting the magnet with the shuttle and controlled by the shuttle yarn or filling.

11. In a loom the combination of a reciprocating shuttle, a section of an electric circuit carried thereby, a spindle or bobbin having also a section of an electric circuit, means for automatically feeding it to the shuttle and for automatically connecting its section of the electric circuit with a section of the circuit carried by the shuttle, and means comprising yarn or filling upon the shuttle for covering the end of the bobbin-holding section of said electric circuit, a device for controlling the time of the operation of the shuttle-feeding mechanism and an electric circuit automatically established between said device and said shuttle and bobbin upon the partial or entire feeding of the yarn or filling from the bobbin.

12. In a loom the combination of a reciprocating bobbin or filling-holder, an electric circuit a portion of which is attached to the bobbin or filling-holder to be reciprocated therewith, means for opening and closing the

circuit comprising a bobbin or filling-holder and the yarn or filling thereon, automatic means for permitting the closing of the circuit by the removal of the yarn or filling from the bobbin or yarn-holder and for automatically opening said circuit and maintaining it open by the automatic substitution of a filled bobbin or yarn-holder for an unfilled one, an electric device upon the loom connected with devices for automatically feeding the said automatic circuit-changing bobbin or yarn-holder and a circuit-maker electrically connected with said controlling devices and arranged to make contact when permitted by the yarn with the part of the circuit carried by the bobbin or yarn-holder.

13. The combination with weft-supply mechanism, comprising mechanism for supplying filled weft-carriers, as required, to the loom, of an electric circuit and mechanism controlling said supply mechanism, said circuit including a generator and having a break which is closed by the entry of the shuttle into the shuttle-box, and each of the shuttles having in it an electric circuit which closes electrically with the exterior circuit when the shuttle is in place in the shuttle-box, said circuit in the shuttle having in it a break which closes automatically when the weft carried by the shuttle is nearly or wholly exhausted, substantially as set forth.

14. A weft-supply mechanism for looms, comprising mechanism for supplying filled bobbins, or weft-carriers, to the shuttle as required, and means for controlling the time of the operation thereof, consisting of an open electric circuit including a magnet, said circuit having in it a break adapted to be closed by the substantial exhaustion of the weft.

MALCOLM G. CHACE.

Witnesses:
F. F. RAYMOND, 2d,
J. M. DOLAN.