(12) INTERNATIONAL APPLICATION PUBLISHED UNDER THE PATENT COOPERATION TREATY (PCT)

(19) World Intellectual Property Organization
International Bureau

(43) International Publication Date
18 December 2003 (18.12.2003)

PCT

(10) International Publication Number
WO 03/104601 A2

(51) International Patent Classification[7]: E21B

(21) International Application Number: PCT/US03/13787

(22) International Filing Date: 5 May 2003 (05.05.2003)

(25) Filing Language: English

(26) Publication Language: English

(30) Priority Data:
60/387,486 10 June 2002 (10.06.2002) US

(71) Applicant *(for all designated States except US)*: **ENVENTURE GLOBAL TECHNOLOGY** [US/US]; 16200 A Park Row, Houston, TX 77084 (US).

(72) Inventor; and
(75) Inventor/Applicant *(for US only)*: **BRISCO, David, Paul** [US/US]; 405 Westridge Drive, Duncan, OK 73533 (US).

(74) Agent: **MATTINGLY, Todd**; Haynes and Boone, LLP, Suite 4300, 1000 Louisiana Street, Houston, TX 77002-5012 (US).

(81) Designated States *(national)*: AE, AG, AL, AM, AT, AU, AZ, BA, BB, BG, BR, BY, BZ, CA, CH, CN, CO, CR, CU, CZ, DE, DK, DM, DZ, EC, EE, ES, FI, GB, GD, GE, GH, GM, HR, HU, ID, IL, IN, IS, JP, KE, KG, KP, KR, KZ, LC, LK, LR, LS, LT, LU, LV, MA, MD, MG, MK, MN, MW, MX, MZ, NO, NZ, OM, PH, PL, PT, RO, RU, SD, SE, SG, SK, SL, TJ, TM, TN, TR, TT, TZ, UA, UG, US, UZ, VN, YU, ZA, ZM, ZW.

(84) Designated States *(regional)*: ARIPO patent (GH, GM, KE, LS, MW, MZ, SD, SL, SZ, TZ, UG, ZM, ZW), Eurasian patent (AM, AZ, BY, KG, KZ, MD, RU, TJ, TM), European patent (AT, BE, BG, CH, CY, CZ, DE, DK, EE, ES, FI, FR, GB, GR, HU, IE, IT, LU, MC, NL, PT, RO, SE, SI, SK, TR), OAPI patent (BF, BJ, CF, CG, CI, CM, GA, GN, GQ, GW, ML, MR, NE, SN, TD, TG).

[Continued on next page]

(54) Title: MONO-DIAMETER WELLBORE CASING

(57) Abstract: A mono diameter wellbore casing.

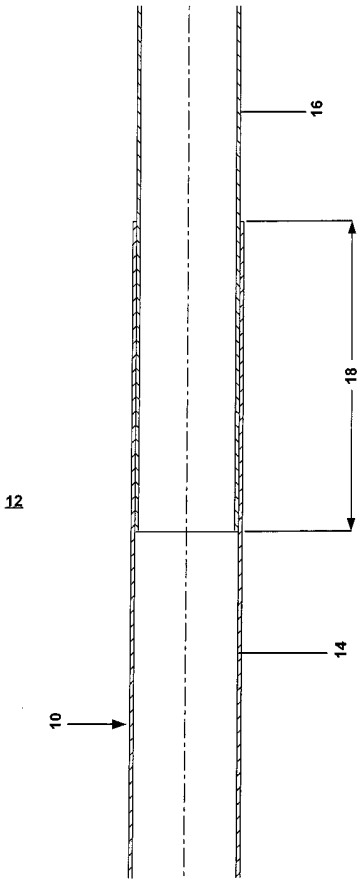

WO 03/104601 A2

Declaration under Rule 4.17:

— *of inventorship (Rule 4.17(iv)) for US only*

Published:

— *without international search report and to be republished upon receipt of that report*

For two-letter codes and other abbreviations, refer to the "Guidance Notes on Codes and Abbreviations" appearing at the beginning of each regular issue of the PCT Gazette.

MONO DIAMETER WELLBORE CASING

Cross Reference To Related Applications

[001] The present application claims the benefit of the filing dates of (1) U.S. provisional patent application serial no. 60/387,486, attorney docket no 25791.107, filed on 6/10/2002, the disclosure of which is incorporated herein by reference.

[002] The present application is related to the following: (1) U.S. patent application serial no. 09/454,139, attorney docket no. 25791.03.02, filed on 12/3/1999, (2) U.S. patent application serial no. 09/510,913, attorney docket no. 25791.7.02, filed on 2/23/2000, (3) U.S. patent application serial no. 09/502,350, attorney docket no. 25791.8.02, filed on 2/10/2000, (4) U.S. patent application serial no. 09/440,338, attorney docket no. 25791.9.02, filed on 11/15/1999, (5) U.S. patent application serial no. 09/523,460, attorney docket no. 25791.11.02, filed on 3/10/2000, (6) U.S. patent application serial no. 09/512,895, attorney docket no. 25791.12.02, filed on 2/24/2000, (7) U.S. patent application serial no. 09/511,941, attorney docket no. 25791.16.02, filed on 2/24/2000, (8) U.S. patent application serial no. 09/588,946, attorney docket no. 25791.17.02, filed on 6/7/2000, (9) U.S. patent application serial no. 09/559,122, attorney docket no. 25791.23.02, filed on 4/26/2000, (10) PCT patent application serial no. PCT/US00/18635, attorney docket no. 25791.25.02, filed on 7/9/2000, (11) U.S. provisional patent application serial no. 60/162,671, attorney docket no. 25791.27, filed on 11/1/1999, (12) U.S. provisional patent application serial no. 60/154,047, attorney docket no. 25791.29, filed on 9/16/1999, (13) U.S. provisional patent application serial no. 60/159,082, attorney docket no. 25791.34, filed on 10/12/1999, (14) U.S. provisional patent application serial no. 60/159,039, attorney docket no. 25791.36, filed on 10/12/1999, (15) U.S. provisional patent application serial no. 60/159,033, attorney docket no. 25791.37, filed on 10/12/1999, (16) U.S. provisional patent application serial no. 60/212,359, attorney docket no. 25791.38, filed on 6/19/2000, (17) U.S. provisional patent application serial no. 60/165,228, attorney docket no. 25791.39, filed on 11/12/1999, (18) U.S. provisional patent application serial no. 60/221,443, attorney docket no. 25791.45, filed on 7/28/2000, (19) U.S. provisional patent application serial no. 60/221,645, attorney docket no. 25791.46, filed on 7/28/2000, (20) U.S. provisional patent application serial no. 60/233,638, attorney docket no. 25791.47, filed on 9/18/2000, (21) U.S. provisional patent application serial no. 60/237,334, attorney docket no. 25791.48, filed on 10/2/2000, (22) U.S. provisional patent application serial no. 60/270,007, attorney docket no. 25791.50, filed on 2/20/2001, (23) U.S. provisional patent application serial no. 60/262,434, attorney docket no. 25791.51, filed on 1/17/2001, (24) U.S, provisional patent application serial no. 60/259,486, attorney docket no. 25791.52, filed on 1/3/2001, (25) U.S. provisional patent application serial no. 60/303,740, attorney docket no. 25791.61, filed on 7/6/2001, (26) U.S. provisional patent application serial no. 60/313,453, attorney docket no. 25791.59, filed on 8/20/2001, (27) U.S. provisional patent application serial no. 60/317,985, attorney docket no. 25791.67, filed on 9/6/2001, (28) U.S. provisional patent application serial no. 60/3318,386, attorney

docket no. 25791.67.02, filed on 9/10/2001, (29) U.S. utility patent application serial no. 09/969,922, attorney docket no. 25791.69, filed on 10/3/2001, (30) U.S. utility patent application serial no. 10/016,467, attorney docket no. 25791.70, filed on 12/10/2001; (31) U.S. provisional patent application serial no. 60/343,674, attorney docket no. 25791.68, filed on 12/27/2001; (32) U.S. provisional patent application serial no. 60/346,309, attorney docket no 25791.92, filed on 1/7/2002; (33) U.S. provisional patent application serial no. 60/372,048, attorney docket no. 25791.93, filed on 4/12/2002; (34) U.S. provisional patent application serial no. 60/372,632, attorney docket no. 25791.101, filed on 4/15/2002; and (35) U.S. provisional patent application serial no. 60/380,147, attorney docket no. 25791.104, filed on 5/6/2002, the disclosures of which are incorporated herein by reference.

Background of the Invention

[003] This invention relates generally to oil and gas exploration, and in particular to forming and repairing wellbore casings to facilitate oil and gas exploration and production.

[004] Conventionally, when a wellbore is created, a number of casings are installed in the borehole to prevent collapse of the borehole wall and to prevent undesired outflow of drilling fluid into the formation or inflow of fluid from the formation into the borehole. The borehole is drilled in intervals whereby a casing which is to be installed in a lower borehole interval is lowered through a previously installed casing of an upper borehole interval. As a consequence of this procedure the casing of the lower interval is of smaller diameter than the casing of the upper interval. Thus, the casings are in a nested arrangement with casing diameters decreasing in downward direction. Cement annuli are provided between the outer surfaces of the casings and the borehole wall to seal the casings from the borehole wall. As a consequence of this nested arrangement a relatively large borehole diameter is required at the upper part of the wellbore. Such a large borehole diameter involves increased costs due to heavy casing handling equipment, large drill bits and increased volumes of drilling fluid and drill cuttings. Moreover, increased drilling rig time is involved due to required cement pumping, cement hardening, required equipment changes due to large variations in hole diameters drilled in the course of the well, and the large volume of cuttings drilled and removed.

[005] The present invention is directed to overcoming one or more of the limitations of the existing processes for forming and repairing wellbore casings.

Summary of the Invention

[006] According to one aspect of the present invention, a method of forming a mono diameter wellbore casing within a borehole that traverses a subterranean formation is provided that includes positioning a first wellbore casing within the borehole, radially expanding and plastically deforming the first wellbore casing within the borehole, positioning a second wellbore casing within the borehole in overlapping relation to the first wellbore casing, radially expanding and plastically deforming the second wellbore casing within the borehole, radially expanding and plastically deforming the overlapping portions of the first and second wellbore casings, and radially expanding and plastically deforming at least a portion of the second wellbore

casing that does not overlap with the first wellbore casing. The inside diameter of the portion of the first wellbore casing that does not overlap with the second wellbore casing is substantially equal to the inside diameter of the radially expanded and plastically deformed portions of the second wellbore casing. an apparatus and method for forming a mono diameter wellbore casing is provided.

[007] According to another aspect of the present invention, an apparatus for forming a mono diameter wellbore casing is provided that includes means for positioning a first wellbore casing within the borehole, means for radially expanding and plastically deforming the first wellbore casing within the borehole, means for positioning a second wellbore casing within the borehole in overlapping relation to the first wellbore casing, means for radially expanding and plastically deforming the second wellbore casing within the borehole, means for radially expanding and plastically deforming the overlapping portions of the first and second wellbore casings, and means for radially expanding and plastically deforming at least a portion of the second wellbore casing that does not overlap with the first wellbore casing, wherein the inside diameter of the portion of the first wellbore casing that does not overlap with the second wellbore casing is substantially equal to the inside diameter of the radially expanded and plastically deformed portions of the second wellbore casing.

[008] According to another aspect of the present invention, an apparatus for radially expanding and plastically deforming a tubular member is provided that includes a tubular adapter defining a longitudinal passage, a tubular outer sleeve coupled to the tubular adapter defining a longitudinal passage, a tubular hydraulic slip body coupled to the tubular outer sleeve defining a plurality of L-shaped bypass ports and a plurality of radial hydraulic slip mounting passages, a plurality of hydraulic slips movably coupled and positioned within corresponding radial hydraulic slip mounting passages for engaging the tubular member, a tubular packer cup mandrel coupled to the tubular hydraulic slip body defining a longitudinal passage, a plurality of packer cups coupled to the tubular packer cup mandrel for sealingly engaging the tubular member, a tubular shoe positioned within and movably coupled to the tubular outer sleeve defining a longitudinal passage, a tubular inner mandrel positioned within and movably coupled to the tubular hydraulic slip body coupled to the tubular shoe defining a longitudinal passage and a plurality of radial bypass ports, a tubular expansion cone mandrel coupled to the tubular inner mandrel defining a longitudinal passage having a throat passage for receiving a ball, an L-shaped bypass port, and a radial pressure port, a tubular expansion cone coupled to the tubular expansion cone including a tapered outer expansion surface for radially expanding and plastically deforming the tubular member, a tubular guide nose coupled to the tubular expansion cone mandrel defining a longitudinal passage, a bypass tube positioned within the tubular inner mandrel coupled to the expansion cone mandrel and the tubular shoe defining a longitudinal passage, and an annular longitudinal bypass passage defined between the tubular inner mandrel and the bypass tube.

[009] According to another aspect of the present invention, an apparatus for radially expanding and plastically deforming a tubular member is provided that includes a tubular support member defining a

longitudinal passage, a tubular outer sleeve coupled to the tubular support member defining a longitudinal passage and a plurality of radial bypass ports, an hydraulic slip coupled to the tubular outer sleeve for controllably engaging the tubular member, one or more packer cups coupled to the tubular outer sleeve for sealingly engaging the tubular member, a tubular inner sleeve positioned within and movably coupled to the tubular outer sleeve defining a longitudinal passage, an annular longitudinal bypass passage, and one or more radial bypass passages, and a tubular expansion cone coupled to the tubular inner sleeve defining a longitudinal passage having a throat passage for receiving a ball, an L-shaped bypass port, and a radial pressure port including an tapered outer expansion surface for radially expanding and plastically deforming the tubular member.

[0010] According to another aspect of the present invention, a method of radially expanding and plastically deforming a wellbore casing positioned within a borehole that traverses a subterranean formation is provided that includes positioning an outer tubular sleeve and an inner tubular sleeve comprising an expansion cone within the borehole, wherein the inner tubular sleeve is movably coupled to and at least partially housed within the outer tubular sleeve, injecting a fluidic material into the inner and outer tubular sleeves, coupling the outer tubular sleeve to the wellbore casing, and extending the inner tubular sleeve out of the outer tubular sleeve into the wellbore casing to radially expand and plastically deform a portion of the wellbore casing using the expansion cone.

[0011] According to another aspect of the present invention, an apparatus for radially expanding and plastically deforming a wellbore casing positioned within a borehole that traverses a subterranean formation is provided that includes means for positioning an outer tubular sleeve and an inner tubular sleeve comprising an expansion cone within the borehole, wherein the inner tubular sleeve is movably coupled to and at least partially housed within the outer tubular sleeve, means for injecting a fluidic material into the inner and outer tubular sleeves, means for coupling the outer tubular sleeve to the wellbore casing, and means for extending the inner tubular sleeve out of the outer tubular sleeve into the wellbore casing to radially expand and plastically deform a portion of the wellbore casing using the expansion cone.

Brief Description of the Drawings

[0012] Fig. 1 is a fragmentary cross-sectional illustration of a borehole that traverses a subterranean formation that includes first and second overlapping and radially expanded and plastically deformed wellbore casings.

[0013] Figs. 2a-2c are fragmentary cross-sectional illustrations of the apparatus of Fig. 1 after positioning an apparatus for forming a mono diameter wellbore casing within the borehole proximate the overlapping portions of the first and second wellbore casings.

[0014] Fig. 2d is a fragmentary cross-sectional illustration of one of the hydraulic slips of the apparatus of Figs. 2a-2c.

[0015] Figs. 3a-3c are fragmentary cross-sectional illustrations of the apparatus of Figs. 2a-2c after activating the apparatus for forming a mono diameter wellbore casing to thereby radially expand the overlapping portions of the first and second wellbore casings.

[0016] Figs. 4a-4c are fragmentary cross-sectional illustrations of the apparatus of Figs. 3a-3c after deactivating and repositioning the apparatus for forming a mono diameter wellbore casing proximate another portion of the overlapping portion of the first and second wellbore casings.

[0017] Fig. 5a-5c are fragmentary cross sectional illustrations of the apparatus of Figs. 4a-4c after reactivating the apparatus for forming a mono diameter wellbore casing to thereby radially expand the other overlapping portions of the first and second wellbore casings and a non overlapping portion of the second wellbore casing.

[0018] Fig. 6 is a fragmentary cross-sectional illustration of the apparatus of Figs. 5a-5c after forming a mono diameter wellbore casing that includes the first and second wellbore casings.

Detailed Description of the Illustrative Embodiments

[0019] In an exemplary embodiment, as illustrated in Fig. 1, a borehole 10 that traverses a subterranean formation 12 includes a first wellbore casing 14 and a second wellbore casing 16. The borehole 10 may be positioned in any orientation, for example, from vertical to horizontal. The subterranean formation 12 may include, for example, a source of hydrocarbons and/or geothermal energy. In an exemplary embodiment, the first wellbore casing 14 is positioned within the borehole 10 and radially expanded and plastically deformed. The second wellbore casing 16 is then positioned within the borehole 10 in an overlapping relation to the first wellbore casing 14 and is then radially expanded and plastically deformed. As a result, the upper end of the second wellbore casing 16 is coupled to and positioned within the lower end of the first wellbore casing 14. The overlapping portions 18 of the first and second wellbore casings, 14 and 16, are thereby coupled to one another within the borehole 10.

[0020] In several exemplary embodiments, the first and second wellbore casings, 14 and 16, are radially expanded and plastically deformed in an overlapping relationship using one or more of the methods and apparatus disclosed in one or more of the following: (1) U.S. patent application serial no. 09/454,139, attorney docket no. 25791.03.02, filed on 12/3/1999, (2) U.S. patent application serial no. 09/510,913, attorney docket no. 25791.7.02, filed on 2/23/2000, (3) U.S. patent application serial no. 09/502,350, attorney docket no. 25791.8.02, filed on 2/10/2000, (4) U.S. patent application serial no. 09/440,338, attorney docket no. 25791.9.02, filed on 11/15/1999, (5) U.S. patent application serial no. 09/523,460, attorney docket no. 25791.11.02, filed on 3/10/2000, (6) U.S. patent application serial no. 09/512,895, attorney docket no. 25791.12.02, filed on 2/24/2000, (7) U.S. patent application serial no. 09/511,941, attorney docket no. 25791.16.02, filed on 2/24/2000, (8) U.S. patent application serial no. 09/588,946, attorney docket no. 25791.17.02, filed on 6/7/2000, (9) U.S. patent application serial no. 09/559,122, attorney docket no. 25791.23.02, filed on 4/26/2000, (10) PCT patent application serial

no. PCT/US00/18635, attorney docket no. 25791.25.02, filed on 7/9/2000, (11) U.S. provisional patent application serial no. 60/162,671, attorney docket no. 25791.27, filed on 11/1/1999, (12) U.S. provisional patent application serial no. 60/154,047, attorney docket no. 25791.29, filed on 9/16/1999, (13) U.S. provisional patent application serial no. 60/159,082, attorney docket no. 25791.34, filed on 10/12/1999, (14) U.S. provisional patent application serial no. 60/159,039, attorney docket no. 25791.36, filed on 10/12/1999, (15) U.S. provisional patent application serial no. 60/159,033, attorney docket no. 25791.37, filed on 10/12/1999, (16) U.S. provisional patent application serial no. 60/212,359, attorney docket no. 25791.38, filed on 6/19/2000, (17) U.S. provisional patent application serial no. 60/165,228, attorney docket no. 25791.39, filed on 11/12/1999, (18) U.S. provisional patent application serial no. 60/221,443, attorney docket no. 25791.45, filed on 7/28/2000, (19) U.S. provisional patent application serial no. 60/221,645, attorney docket no. 25791.46, filed on 7/28/2000, (20) U.S. provisional patent application serial no. 60/233,638, attorney docket no. 25791.47, filed on 9/18/2000, (21) U.S. provisional patent application serial no. 60/237,334, attorney docket no. 25791.48, filed on 10/2/2000, (22) U.S. provisional patent application serial no. 60/270,007, attorney docket no. 25791.50, filed on 2/20/2001, (23) U.S. provisional patent application serial no. 60/262,434, attorney docket no. 25791.51, filed on 1/17/2001, (24) U.S, provisional patent application serial no. 60/259,486, attorney docket no. 25791.52, filed on 1/3/2001, (25) U.S. provisional patent application serial no. 60/303,740, attorney docket no. 25791.61, filed on 7/6/2001, (26) U.S. provisional patent application serial no. 60/313,453, attorney docket no. 25791.59, filed on 8/20/2001, (27) U.S. provisional patent application serial no. 60/317,985, attorney docket no. 25791.67, filed on 9/6/2001, (28) U.S. provisional patent application serial no. 60/3318,386, attorney docket no. 25791.67.02, filed on 9/10/2001, (29) U.S. utility patent application serial no. 09/969,922, attorney docket no. 25791.69, filed on 10/3/2001, (30) U.S. utility patent application serial no. 10/016,467, attorney docket no. 25791.70, filed on 12/10/2001; (31) U.S. provisional patent application serial no. 60/343,674, attorney docket no. 25791.68, filed on 12/27/2001; (32) U.S. provisional patent application serial no. 60/346,309, attorney docket no 25791.92, filed on 1/7/2002; (33) U.S. provisional patent application serial no. 60/372,048, attorney docket no. 25791.93, filed on 4/12/2002; (34) U.S. provisional patent application serial no. 60/372,632, attorney docket no. 25791.101, filed on 4/15/2002; and (35) U.S. provisional patent application serial no. 60/380,147, attorney docket no. 25791.104, filed on 5/6/2002, the disclosures of which are incorporated herein by reference.

[0021] As illustrated in Figs. 2a-2d, in an exemplary embodiment, an apparatus 100 for forming a mono diameter wellbore casing is then positioned within the borehole 10 proximate the overlapping portions 18 of the first and second wellbore casing, 14 and 16, that includes a tubular support member 102 that defines a longitudinal passage 102a. An end 104a of a tubular adaptor 104 that defines a longitudinal passage 104b is threadably coupled to an end 102b of the tubular support member 102 that includes an external flange 104c having an externally recessed portion 104d at another end 104e that

includes an externally tapered end face 104f. In an exemplary embodiment, the tubular support member 102 is a drill pipe.

[0022] An end 106a of a tubular outer sleeve 106 that defines a longitudinal passage 106b and a plurality of radial bypass ports 106c at another end 106d is threadably coupled to the recessed portion 104d of the external flange 104c of the end 104e of the tubular adaptor 104. An end 108a of a tubular hydraulic slip body 108 that defines a longitudinal passage 108b, a plurality of L-shaped bypass passages 108c, and a plurality of radial slip mounting passages 108d includes a recessed portion 108e that is threadably coupled to the 106d of the tubular outer sleeve 106 and a plurality of circumferentially spaced apart lugs 108f that are interleaved with the L-shaped bypass passages. Another end 108g of the tubular hydraulic slip body 108 includes an internally recessed portion 108h that is threadably coupled to an end 110a of a tubular packer cup mandrel 110 that defines a longitudinal passage 110b and includes a flange 110c at another end 110d that defines a recessed portion 110e and a plurality of radial passages 110f, and one or more lugs 110g.

[0023] As illustrated in Fig. 2d, a plurality of radially movable hydraulic slips 112 are movably coupled to and positioned within corresponding radial slip mounting passages 108d of the tubular hydraulic slip body 108 that each include slip base members 112a, spring members 112b, and slip engaging elements 112c. In an exemplary embodiment, the hydraulic slips 112 are round hydraulic slips that are hydraulically actuated when the internal pressure within the hydraulic slip body 108 pushes the hydraulic slips radially outwardly until the hydraulic slips are forced into engagement the internal diameters of the first and/or second wellbore casings, 14 and 16, thereby holding the hydraulic slips and all of the components rigidly attached to the hydraulic slips in place against external loads and pressure. In an exemplary embodiment, when the internal pressure within the hydraulic slip body 108 is reduced, the spring members 112b pull the slip engaging elements 112c away from the inside diameters of the first and/or second wellbore casings, 14 and 16. In an exemplary embodiment, the lugs 108f of the tubular hydraulic slip body 108 may engage the lugs 112f on the shoe 114 to allow transmission of torque when apparatus 100 is in extended position. In an exemplary embodiment, the tubular hydraulic slip body 108 also includes internal sealing members 108i that provide a fluidic seal between the tubular hydraulic slip body 108 and the inner mandrel 116.

[0024] A tubular shoe 114 that defines a longitudinal passage 114a and a recessed portion 114b at one end 114c is received within and mates with the longitudinal passage 106b of the tubular outer sleeve 106 that includes an internally tapered end face 114d at another end 114e and a plurality of circumferentially spaced apart lugs 114f at the one end. In an exemplary embodiment, the shoe 114 further includes one or more sealing members 114g for fluidicly sealing the interface between the shoe and the tubular outer sleeve 106. An end 116a of an inner tubular mandrel 116 that defines a longitudinal passage 116b and a plurality of radial bypass ports 116c is threadably coupled to the recessed portion 114b at the one end 114c of the tubular shoe 114 and mates with the longitudinal

passage 108b of the tubular hydraulic slip body 108. Another end 116d of the inner tubular mandrel 116 is threadably coupled to a recessed portion 118a of an end 118b of an expansion cone mandrel 118 that defines a longitudinal passage 118c having a throat passage 118d, an L-shaped bypass port 118e, and a radial pressure port 118f, and includes an external flange 118g, another recessed portion 118h, and lugs 118j.

[0025] A tubular expansion cone 120 that defines a longitudinal passage 120a mates with and is coupled to another end 118i of the expansion cone mandrel 118 proximate the external flange 118g that includes an outer expansion surface 120b for radially expanding and plastically deforming the first and second wellbore casings, 14 and 16. In an exemplary embodiment, the maximum outside diameter of the outer expansion surface 120b of the tubular expansion cone 120 is substantially equal to the inside diameter of the first wellbore casing 14. A recessed portion 122a of an end 122b of a tubular guide nose 122 that defines a longitudinal passage 122c is threadably coupled to the end 118i of the expansion cone mandrel 118 that includes a tapered end face 122d at another end 122e. In an exemplary embodiment, the tubular guide nose 122 helps to guide the apparatus 100 into the first and/or second wellbore casings, 14 and 16.

[0026] An end 124a of a tubular bypass tube 124 that defines a longitudinal passage 124b is received within and coupled to the recessed portion 118h of the expansion cone mandrel 118 and another end 124c of the tubular bypass tube is received within and coupled to a recess 114g in the end 114c of the tubular shoe 114. A tubular spacer 126, a first packer cup 128, a second spacer 130, a third spacer 132, and a second packer cup 134 are sequentially mounted on the tubular packer cup mandrel 110 between the end 108g of the tubular hydraulic slip body 108 and the end 110d of the tubular packer cup mandrel 110. In an exemplary embodiment, the first and second packer cups, 128 and 134, resiliently engage and fluidicly seal the interface with the interior surface of the first wellbore casing 14. In an exemplary embodiment, the packer cups, 128 and 134, provide a fluidic seal between the apparatus 100 and the first and/or second wellbore casings, 14 and 16. In this manner, an annular chamber above the expansion cone 120 within the first and/or second wellbore casings, 14 and 16, may be pressurized for reasons to be described. In an exemplary embodiment, the lugs 110g on the end 110d of the packer cup mandrel 110 may engage the lugs 118j on the end face of the flange 118g of the expansion cone mandrel 118 to allow the transmission of torque loads when the apparatus is in a collapsed position.

[0027] During the placement of the apparatus 100 within the borehole 10 proximate the overlapping portions 18 of the first and second wellbore casings, 14 and 16, fluidic materials 200 within the borehole are conveyed through the longitudinal passages 122c, 118c, 124b, 104b, and 102a of the apparatus 100. In this manner, surge pressures within the borehole 10 are minimized during the insertion and placement of the apparatus 100 within the borehole.

[0028] As illustrated in Figs. 2b and 2c, in an exemplary embodiment, the apparatus 100 is positioned

proximate the overlapping portions 18 of the first and second wellbore casings, 14 and 16, with the leading edge of the outer expansion surface 120b of the tubular expansion cone 120 positioned within the interior of the upper end of the second wellbore casing 16 and with the guide nose 122 mating with and extending into the interior of the upper end of the second wellbore casing. In this manner, the apparatus 100 is located and supported at least in part by the upper end of the second wellbore casing 16. Furthermore, in this manner, the apparatus 100 is centrally positioned within the first and second wellbore casings, 14 and 16.

[0029] In an exemplary embodiment, as illustrated in Figs. 3a-3c, a ball 202 is then positioned within the throat passage 118d of the longitudinal passage 118c of the expansion cone mandrel 118 by injecting a fluidic material 204 into the apparatus 100 through the longitudinal passages 102a, 104b, 106b, 114a, 124b, and 118c. The injected fluidic material 204 is also conveyed through the radial pressure ports 118f of the expansion cone mandrel 118 into an annular chamber 206 above the external flange 118g of the expansion cone mandrel and then into the longitudinal passages 110b and 108b of the packer cup mandrel 110 and hydraulic slip body 108, respectively, and into the radial slip mounting passages 108d of the hydraulic slip body. Continued injection of the fluidic material 204 into the apparatus 100 through the longitudinal passages 102a, 104b, 106b, 114a, 124b, and 118c pressurizes the annular chamber 206 and the radial slip mounting passages 108d thereby displacing the expansion cone mandrel 118, the expansion cone 120, and the guide nose 122 downwardly in the longitudinal direction and displacing the hydraulic slips 112 outwardly in the radial direction.

[0030] In particular, the outward radial displacement of the hydraulic slips 112 causes the hydraulic slips to engage in the interior surface of the first wellbore casing 14 thereby fixing the position of the tubular support member 102, the tubular adaptor 104, the hydraulic slip body 108, the packer cup mandrel 110, the spacer 126, the packer cup 128, the spacer 130, the spacer 132, and the packer cup 134 relative to the first wellbore casing. As a result, the shoe 114, the inner mandrel 116, the expansion cone mandrel 118, the expansion cone 120, the guide nose 122, and the bypass tube 124 are then displaced downwardly relative to the tubular support member 102, the tubular adaptor 104, the hydraulic slip body 108, the packer cup mandrel 110, the spacer 126, the packer cup 128, the spacer 130, the spacer 132, and the packer cup 134 by the pressurization of the annular chamber 206.

[0031] The downward longitudinal displacement of the expansion cone 120 radially expands and plastically deforms the overlapping portions 18 of the first and second wellbore casings, 14 and 16. As a result of the radial expansion and plastic deformation, the inside diameter of the portion of the second wellbore casing 16 that overlaps with the first wellbore casing 14 is then substantially equal to the inside diameter of the portion of the first wellbore casing that does not overlap with the second wellbore casing.

[0032] During the downward longitudinal displacement of the expansion cone mandrel 118, the expansion cone 120, and the guide nose 122, fluidic materials 208 within the second wellbore casing

16 that are displaced by the downward longitudinal displacement of the expansion cone mandrel, the expansion cone, and the guide nose are conveyed through the bypass port 118e of the expansion cone mandrel, the annular bypass passage 210 defined between the inner mandrel 116 and the bypass tube 124, the bypass ports 116c of the inner mandrel, the bypass ports 108c of the hydraulic slip body 108, and the bypass ports 106c of the outer sleeve 106 out of the apparatus 100.

[0033] In an exemplary embodiment, during the pressurization of the annular chamber 206, the packer cups 128 and 134 provide a fluidic seal between the apparatus 100 and the first and second wellbore casings, 14 and 16. Furthermore, during the pressurization of the annular chamber 206, the interface between the tubular expansion cone 120 and the first and/or second wellbore casings, 14 and 16, is not fluid tight. In this manner, lubricants that may be provided in the injected fluidic materials 204 may be conveyed to the leading edge of the interface between the expansion surface 120b and the first and/or second wellbore casing, 14 and 16, in order to minimize frictional forces and thereby enhance the operation efficiency of the operation.

[0034] In an exemplary embodiment, as illustrated in Fig. 3a, the shoe 114, the inner mandrel 116, the expansion cone mandrel 118, the expansion cone 120, the guide nose 122, and the bypass tube 124 are then displaced downwardly relative to the tubular support member 102, the tubular adaptor 104, the hydraulic slip body 108, the packer cup mandrel 110, the spacer 126, the packer cup 128, the spacer 130, the spacer 132, and the packer cup 134 by the pressurization of the annular chamber 206 until the lugs 114f of the shoe impact the hydraulic slip body 108. At this point, in an exemplary embodiment, the operating pressure within the annular chamber 206 will increase suddenly thereby indicating that the expansion cone 120 has reached the end of the expansion stroke.

[0035] In an exemplary embodiment, as illustrated in Figs. 4a-4c, once the expansion cone 120 has reached the end of the expansion stroke, the operating pressures of the annular chamber 206 and the radial slip mounting passages 108d are reduced by stopping the injection of the fluidic material 204 into the apparatus 100 and/or by activating one or more pressure relief valves 210 at a surface location to relieve the operating pressures in the annular chamber and radial slip mounting passages to atmospheric. As a result of the pressure relief of the operating pressures of the annular chamber 206 and the radial slip mounting passages 108d, the hydraulic slips 112 may be displaced inwardly in the radial direction thereby disengaging the hydraulic slip body 108 from the first wellbore casing 14. Furthermore, as a result of the pressure relief of the operating pressures of the annular chamber 206 and the radial slip mounting passages 108d, the support member 102, the adapter 104, the outer sleeve 106, the hydraulic slip body 108, the packer cup mandrel 110, the hydraulic slips 112, the spacer 126, the first packer cup 128, the spacer 130, the spacer 132, and the second packer cup 134 may then be displaced downwardly in the longitudinal direction relative to the shoe 114, the inner mandrel 116, the expansion cone mandrel 118, the expansion cone 120, the guide nose 122, and the bypass tube 124 until the internally tapered end face 114d of the shoe 114 impacts the of the external tapered end face

104f of the adapter 104. In this manner, the apparatus 100 is placed in a collapsed position.

[0036] In an exemplary embodiment, as illustrated in Figs. 5a-5c, the fluidic material 204 is once again injected into the apparatus 100 through the longitudinal passages 102a, 104b, 106b, 114a, 124b, and 118c. The injected fluidic material 204 is also conveyed through the radial pressure ports 118f of the expansion cone mandrel 118 into an annular chamber 206 above the external flange 118g of the expansion cone mandrel and then into the longitudinal passages 110b and 108b of the packer cup mandrel 110 and hydraulic slip body 108, respectively, and into the radial slip mounting passages 108d of the hydraulic slip body. Continued injection of the fluidic material 204 into the apparatus 100 through the longitudinal passages 102a, 104b, 106b, 114a, 124b, and 118c pressurizes the annular chamber 206 and the radial slip mounting passages 108d thereby displacing the expansion cone mandrel 118, the expansion cone 120, and the guide nose 122 downwardly in the longitudinal direction and displacing the hydraulic slips 112 outwardly in the radial direction.

[0037] In particular, the outward radial displacement of the hydraulic slips 112 causes the hydraulic slips to engage in the interior surface of the first wellbore casing 14 thereby fixing the position of the tubular support member 102, the tubular adaptor 104, the hydraulic slip body 108, the packer cup mandrel 110, the spacer 126, the packer cup 128, the spacer 130, the spacer 132, and the packer cup 134 relative to the first wellbore casing. As a result, the shoe 114, the inner mandrel 116, the expansion cone mandrel 118, the expansion cone 120, the guide nose 122, and the bypass tube 124 are then displaced downwardly relative to the tubular support member 102, the tubular adaptor 104, the hydraulic slip body 108, the packer cup mandrel 110, the spacer 126, the packer cup 128, the spacer 130, the spacer 132, and the packer cup 134 by the pressurization of the annular chamber 206.

[0038] The downward longitudinal displacement of the expansion cone 120 radially expands and plastically deforms the remaining portion of the overlapping portions 18 of the first and second wellbore casings, 14 and 16, and a non-overlapping portion of the second wellbore casing 16. As a result of the radial expansion and plastic deformation, the inside diameter of the portion of the second wellbore casing 16 that overlaps with the first wellbore casing 14 is then substantially equal to the inside diameter of the portion of the first wellbore casing that does not overlap with the second wellbore casing. Furthermore, as a result of the radial expansion and plastic deformation, the inside diameter of at least a portion of the second wellbore casing 16 that does not overlap with the first wellbore casing 14 is substantially equal to the inside diameter of the portion of the first wellbore casing that does not overlap with the second wellbore casing.

[0039] During the downward longitudinal displacement of the expansion cone mandrel 118, the expansion cone 120, and the guide nose 122, fluidic materials 208 within the second wellbore casing 16 that are displaced by the downward longitudinal displacement of the expansion cone mandrel, the expansion cone, and the guide nose are conveyed through the bypass port 118e of the expansion cone mandrel, the annular passage 210 defined between the inner mandrel 116 and the bypass tube 124, the

bypass ports 116c of the inner mandrel, the bypass ports 108c of the hydraulic slip body 108, and the bypass ports 106c of the outer sleeve 106 out of the apparatus 100.

[0040] In an exemplary embodiment, during the pressurization of the annular chamber 206, the packer cups 128 and 134 provide a fluidic seal between the apparatus 100 and the first and second wellbore casings, 14 and 16. Furthermore, during the pressurization of the annular chamber 206, the interface between the tubular expansion cone 120 and the first and/or second wellbore casings, 14 and 16, is not fluid tight. In this manner, lubricants that may be provided in the injected fluidic materials 204 may be conveyed to the leading edge of the interface between the expansion surface 120b and the first and/or second wellbore casing, 14 and 16, in order to minimize frictional forces and thereby enhance the operation efficiency of the operation.

[0041] In an exemplary embodiment, as illustrated in Fig. 5b, the shoe 114, the inner mandrel 116, the expansion cone mandrel 118, the expansion cone 120, the guide nose 122, and the bypass tube 124 are then displaced downwardly relative to the tubular support member 102, the tubular adaptor 104, the hydraulic slip body 108, the packer cup mandrel 110, the spacer 126, the packer cup 128, the spacer 130, the spacer 132, and the packer cup 134 by the pressurization of the annular chamber 206 until the lugs 114f of the shoe impact the hydraulic slip body 108. At this point, in an exemplary embodiment, the operating pressure within the annular chamber 206 will increase suddenly thereby indicating that the expansion cone 120 has reached the end of the expansion stroke.

[0042] As illustrated in Fig. 6, in an exemplary embodiment, the operations of Figs. 3a-3c, 4a-4c, and 5a-5c, may then be repeated to thereby radially expand and plastically deform the remaining portions of the second wellbore casing 16 that do not overlap with the first wellbore casing 14. As a result, a mono diameter wellbore casing is constructed that includes the first and second wellbore casings, 14 and 16. The inside diameter of the first wellbore casing ID_{14} is substantially equal to the inside diameter of the second wellbore casing ID_{16}.

[0043] The illustrative embodiments provide the advantage of expanding the casing without applying pressure to the entire casing string and allowing easy retrieval of the expansion apparatus 100 if expansion problems develop.

[0044] In several alternative embodiments, the expansion cone 120 may be an expandable adjustable expansion cone.

[0045] In several alternative embodiments, other sealing methods and apparatus between the apparatus 100 and the inside diameters of the first and/or second wellbore casings, 14 and 16, may be used. For example, hydraulically and/or mechanically actuated packer elements and/or mechanical slips with drag blocks and J-slots may be used in place of the hydraulic slips 112 to hold the tubular hydraulic slip body 108 in a stationary position during the radial expansion process.

[0046] In several alternative embodiments, the apparatus 100 can also be used for single stage top-down expansion of cased and open hole liners and as a liner hanger. In an exemplary embodiment, the

expansion cone 120, the packer cups, 128 and 134, and the hydraulic slips 112 are run in an expansion cone launcher as disclosed in one or more of the following: (1) U.S. patent application serial no. 09/454,139, attorney docket no. 25791.03.02, filed on 12/3/1999, (2) U.S. patent application serial no. 09/510,913, attorney docket no. 25791.7.02, filed on 2/23/2000, (3) U.S. patent application serial no. 09/502,350, attorney docket no. 25791.8.02, filed on 2/10/2000, (4) U.S. patent application serial no. 09/440,338, attorney docket no. 25791.9.02, filed on 11/15/1999, (5) U.S. patent application serial no. 09/523,460, attorney docket no. 25791.11.02, filed on 3/10/2000, (6) U.S. patent application serial no. 09/512,895, attorney docket no. 25791.12.02, filed on 2/24/2000, (7) U.S. patent application serial no. 09/511,941, attorney docket no. 25791.16.02, filed on 2/24/2000, (8) U.S. patent application serial no. 09/588,946, attorney docket no. 25791.17.02, filed on 6/7/2000, (9) U.S. patent application serial no. 09/559,122, attorney docket no. 25791.23.02, filed on 4/26/2000, (10) PCT patent application serial no. PCT/US00/18635, attorney docket no. 25791.25.02, filed on 7/9/2000, (11) U.S. provisional patent application serial no. 60/162,671, attorney docket no. 25791.27, filed on 11/1/1999, (12) U.S. provisional patent application serial no. 60/154,047, attorney docket no. 25791.29, filed on 9/16/1999, (13) U.S. provisional patent application serial no. 60/159,082, attorney docket no. 25791.34, filed on 10/12/1999, (14) U.S. provisional patent application serial no. 60/159,039, attorney docket no. 25791.36, filed on 10/12/1999, (15) U.S. provisional patent application serial no. 60/159,033, attorney docket no. 25791.37, filed on 10/12/1999, (16) U.S. provisional patent application serial no. 60/212,359, attorney docket no. 25791.38, filed on 6/19/2000, (17) U.S. provisional patent application serial no. 60/165,228, attorney docket no. 25791.39, filed on 11/12/1999, (18) U.S. provisional patent application serial no. 60/221,443, attorney docket no. 25791.45, filed on 7/28/2000, (19) U.S. provisional patent application serial no. 60/221,645, attorney docket no. 25791.46, filed on 7/28/2000, (20) U.S. provisional patent application serial no. 60/233,638, attorney docket no. 25791.47, filed on 9/18/2000, (21) U.S. provisional patent application serial no. 60/237,334, attorney docket no. 25791.48, filed on 10/2/2000, (22) U.S. provisional patent application serial no. 60/270,007, attorney docket no. 25791.50, filed on 2/20/2001, (23) U.S. provisional patent application serial no. 60/262,434, attorney docket no. 25791.51, filed on 1/17/2001, (24) U.S, provisional patent application serial no. 60/259,486, attorney docket no. 25791.52, filed on 1/3/2001, (25) U.S. provisional patent application serial no. 60/303,740, attorney docket no. 25791.61, filed on 7/6/2001, (26) U.S. provisional patent application serial no. 60/313,453, attorney docket no. 25791.59, filed on 8/20/2001, (27) U.S. provisional patent application serial no. 60/317,985, attorney docket no. 25791.67, filed on 9/6/2001, (28) U.S. provisional patent application serial no. 60/3318,386, attorney docket no. 25791.67.02, filed on 9/10/2001, (29) U.S. utility patent application serial no. 09/969,922, attorney docket no. 25791.69, filed on 10/3/2001, (30) U.S. utility patent application serial no. 10/016,467, attorney docket no. 25791.70, filed on 12/10/2001; (31) U.S. provisional patent application serial no. 60/343,674, attorney docket no. 25791.68, filed on 12/27/2001; (32) U.S. provisional patent

application serial no. 60/346,309, attorney docket no 25791.92, filed on 1/7/2002; (33) U.S. provisional patent application serial no. 60/372,048, attorney docket no. 25791.93, filed on 4/12/2002; (34) U.S. provisional patent application serial no. 60/372,632, attorney docket no. 25791.101, filed on 4/15/2002; and (35) U.S. provisional patent application serial no. 60/380,147, attorney docket no. 25791.104, filed on 5/6/2002, the disclosures of which are incorporated herein by reference.

[0047] The first stroke of the expansion cone 120 expands the expandable casing out to contact the well casing with enough force to hold the weight of the expandable casing string or liner. Pressure is then released and the expansion assy is moved down to the collapsed position and the expansion process repeated.

[0048] A method of forming a mono diameter wellbore casing within a borehole that traverses a subterranean formation has been described that includes positioning a first wellbore casing within the borehole, radially expanding and plastically deforming the first wellbore casing within the borehole, positioning a second wellbore casing within the borehole in overlapping relation to the first wellbore casing, radially expanding and plastically deforming the second wellbore casing within the borehole, radially expanding and plastically deforming the overlapping portions of the first and second wellbore casings, and radially expanding and plastically deforming at least a portion of the second wellbore casing that does not overlap with the first wellbore casing. The inside diameter of the portion of the first wellbore casing that does not overlap with the second wellbore casing is substantially equal to the inside diameter of the radially expanded and plastically deformed portions of the second wellbore casing. In an exemplary embodiment, the radially expanding and plastically deforming the overlapping portions of the first and second wellbore casings includes positioning a telescoping radial expansion device comprising an outer sleeve and an inner sleeve positioned within and movably coupled to the outer sleeve comprising a tubular expansion cone proximate the end of the second wellbore casing, and injecting a fluidic material into the telescoping radial expansion device to cause the outer sleeve to engage the first wellbore casing and cause the inner sleeve to extend out of the outer sleeve into the overlapping portions of the first and second wellbore casings to cause the tubular expansion cone to radially expand and plastically deform the overlapping portions of the first and second wellbore casings. In an exemplary embodiment, the method further includes conveying fluidic materials within the borehole that are displaced by the extension of the inner sleeve to a location within the borehole above the tubular expansion cone. In an exemplary embodiment, radially expanding and plastically deforming at least a portion of the second wellbore casing that does not overlap with the first wellbore casing includes reducing the operating pressure within the telescoping radial expansion device, moving the outer sleeve onto the inner sleeve of the telescoping radial expansion device, and injecting a fluidic material into the telescoping radial expansion device to cause the outer sleeve to engage at least one of the first and second wellbore casings and cause the inner sleeve to extend out of the outer sleeve into the second wellbore casing to cause the tubular expansion cone to radially expand and plastically

deform at least a portion of the second wellbore casing. In an exemplary embodiment, the method further includes conveying fluidic materials within the borehole that are displaced by the extension of the inner sleeve to a location within the borehole above the tubular expansion cone.

[0049] An apparatus for forming a mono diameter wellbore casing has been described that includes means for positioning a first wellbore casing within the borehole, means for radially expanding and plastically deforming the first wellbore casing within the borehole, means for positioning a second wellbore casing within the borehole in overlapping relation to the first wellbore casing, means for radially expanding and plastically deforming the second wellbore casing within the borehole, means for radially expanding and plastically deforming the overlapping portions of the first and second wellbore casings, and means for radially expanding and plastically deforming at least a portion of the second wellbore casing that does not overlap with the first wellbore casing. The inside diameter of the portion of the first wellbore casing that does not overlap with the second wellbore casing is substantially equal to the inside diameter of the radially expanded and plastically deformed portions of the second wellbore casing. In an exemplary embodiment, the means for radially expanding and plastically deforming the overlapping portions of the first and second wellbore casings includes means for positioning a telescoping radial expansion device comprising an outer sleeve and an inner sleeve positioned within and movably coupled to the outer sleeve comprising a tubular expansion cone proximate the end of the second wellbore casing, and means for injecting a fluidic material into the telescoping radial expansion device to cause the outer sleeve to engage the first wellbore casing and cause the inner sleeve to extend out of the outer sleeve into the overlapping portions of the first and second wellbore casings to cause the tubular expansion cone to radially expand and plastically deform the overlapping portions of the first and second wellbore casings. In an exemplary embodiment, the method further includes conveying fluidic materials within the borehole that are displaced by the extension of the inner sleeve to a location within the borehole above the tubular expansion cone. In an exemplary embodiment, the means for radially expanding and plastically deforming at least a portion of the second wellbore casing that does not overlap with the first wellbore casing includes means for reducing the operating pressure within the telescoping radial expansion device, means for moving the outer sleeve onto the inner sleeve of the telescoping radial expansion device, and means for injecting a fluidic material into the telescoping radial expansion device to cause the outer sleeve to engage at least one of the first and second wellbore casings and cause the inner sleeve to extend out of the outer sleeve into the second wellbore casing to cause the tubular expansion cone to radially expand and plastically deform at least a portion of the second wellbore casing. In an exemplary embodiment, the method further includes conveying fluidic materials within the borehole that are displaced by the extension of the inner sleeve to a location within the borehole above the tubular expansion cone.

[0050] An apparatus for radially expanding and plastically deforming a tubular member has been described that includes a tubular adapter defining a longitudinal passage, a tubular outer sleeve coupled

to the tubular adapter defining a longitudinal passage, a tubular hydraulic slip body coupled to the tubular outer sleeve defining a plurality of L-shaped bypass ports and a plurality of radial hydraulic slip mounting passages, a plurality of hydraulic slips movably coupled and positioned within corresponding radial hydraulic slip mounting passages for engaging the tubular member, a tubular packer cup mandrel coupled to the tubular hydraulic slip body defining a longitudinal passage, a plurality of packer cups coupled to the tubular packer cup mandrel for sealingly engaging the tubular member, a tubular shoe positioned within and movably coupled to the tubular outer sleeve defining a longitudinal passage, a tubular inner mandrel positioned within and movably coupled to the tubular hydraulic slip body coupled to the tubular shoe defining a longitudinal passage and a plurality of radial bypass ports, a tubular expansion cone mandrel coupled to the tubular inner mandrel defining a longitudinal passage having a throat passage for receiving a ball, an L-shaped bypass port, and a radial pressure port, a tubular expansion cone coupled to the tubular expansion cone including a tapered outer expansion surface for radially expanding and plastically deforming the tubular member, a tubular guide nose coupled to the tubular expansion cone mandrel defining a longitudinal passage, a bypass tube positioned within the tubular inner mandrel coupled to the expansion cone mandrel and the tubular shoe defining a longitudinal passage, and an annular longitudinal bypass passage defined between the tubular inner mandrel and the bypass tube. In an exemplary embodiment, the longitudinal passages of the tubular adapter, bypass tube, and tubular expansion cone mandrel are fluidicly coupled. In an exemplary embodiment, the longitudinal passage of the tubular expansion cone mandrel is fluidicly coupled to the radial pressure port of the tubular expansion cone mandrel. In an exemplary embodiment, the L-shaped bypass port of the tubular expansion cone mandrel is fluidicly coupled to the annular longitudinal bypass passage, the radial bypass passages of the tubular inner mandrel, the L-shaped bypass ports of the tubular hydraulic slip body, and the radial bypass ports of the tubular outer sleeve.

[0051] An apparatus for radially expanding and plastically deforming a tubular member has been described that includes a tubular support member defining a longitudinal passage, a tubular outer sleeve coupled to the tubular support member defining a longitudinal passage and a plurality of radial bypass ports, an hydraulic slip coupled to the tubular outer sleeve for controllably engaging the tubular member, one or more packer cups coupled to the tubular outer sleeve for sealingly engaging the tubular member, a tubular inner sleeve positioned within and movably coupled to the tubular outer sleeve defining a longitudinal passage, an annular longitudinal bypass passage, and one or more radial bypass passages, and a tubular expansion cone coupled to the tubular inner sleeve defining a longitudinal passage having a throat passage for receiving a ball, an L-shaped bypass port, and a radial pressure port including an tapered outer expansion surface for radially expanding and plastically deforming the tubular member. In an exemplary embodiment, the longitudinal passages of the tubular outer sleeve and the tubular expansion cone are fluidicly coupled. In an exemplary embodiment, the longitudinal

passage of the tubular expansion cone is fluidicly coupled to the radial pressure port of the tubular expansion cone. In an exemplary embodiment, the L-shaped bypass port of the tubular expansion cone is fluidicly coupled to the annular longitudinal bypass passage and the radial bypass passages of the tubular inner sleeve, and the L-shaped bypass ports and the radial bypass ports of the tubular outer sleeve.

[0052] A method of radially expanding and plastically deforming a wellbore casing positioned within a borehole that traverses a subterranean formation has been described that includes positioning an outer tubular sleeve and an inner tubular sleeve comprising an expansion cone within the borehole, wherein the inner tubular sleeve is movably coupled to and at least partially housed within the outer tubular sleeve, injecting a fluidic material into the inner and outer tubular sleeves, coupling the outer tubular sleeve to the wellbore casing, and extending the inner tubular sleeve out of the outer tubular sleeve into the wellbore casing to radially expand and plastically deform a portion of the wellbore casing using the expansion cone. In an exemplary embodiment, injecting a fluidic material into the inner and outer tubular sleeves includes injecting the fluidic material into an annular chamber above the expansion cone. In an exemplary embodiment, the method further includes conveying fluidic materials within the borehole displaced by the extension of the inner tubular sleeve to a location above the expansion cone. In an exemplary embodiment, conveying fluidic materials within the borehole displaced by the extension of the inner tubular sleeve above the expansion cone includes conveying fluidic materials within the borehole displaced by the extension of the inner tubular sleeve through an annular passage and one or more radial passages to the location above the expansion cone. In an exemplary embodiment, the method further includes depressuring the inner and outer tubular sleeves, decoupling the outer tubular sleeve and the wellbore casing, and collapsing the outer tubular sleeve onto the inner tubular sleeve. In an exemplary embodiment, the method further includes injecting a fluidic material into the inner and outer tubular sleeves, coupling the outer tubular sleeve to the wellbore casing, and extending the inner tubular sleeve out of the outer tubular sleeve into the wellbore casing to radially expand and plastically deform another portion of the wellbore casing. In an exemplary embodiment, injecting a fluidic material into the inner and outer tubular sleeves includes injecting the fluidic material into an annular chamber above the expansion cone. In an exemplary embodiment, the method further includes conveying fluidic materials within the borehole displaced by the extension of the inner tubular sleeve to a location above the expansion cone. In an exemplary embodiment, conveying fluidic materials within the borehole displaced by the extension of the inner tubular sleeve above the expansion cone includes conveying fluidic materials within the borehole displaced by the extension of the inner tubular sleeve through an annular passage and one or more radial passages to the location above the expansion cone.

[0053] An apparatus for radially expanding and plastically deforming a wellbore casing positioned within a borehole that traverses a subterranean formation has been described that includes means for

positioning an outer tubular sleeve and an inner tubular sleeve comprising an expansion cone within the borehole, wherein the inner tubular sleeve is movably coupled to and at least partially housed within the outer tubular sleeve, means for injecting a fluidic material into the inner and outer tubular sleeves, means for coupling the outer tubular sleeve to the wellbore casing, and means for extending the inner tubular sleeve out of the outer tubular sleeve into the wellbore casing to radially expand and plastically deform a portion of the wellbore casing using the expansion cone. In an exemplary embodiment, the means for injecting a fluidic material into the inner and outer tubular sleeves includes means for injecting the fluidic material into an annular chamber above the expansion cone. In an exemplary embodiment, the apparatus further includes means for conveying fluidic materials within the borehole displaced by the extension of the inner tubular sleeve to a location above the expansion cone. In an exemplary embodiment, the means for conveying fluidic materials within the borehole displaced by the extension of the inner tubular sleeve above the expansion cone includes means for conveying fluidic materials within the borehole displaced by the extension of the inner tubular sleeve through an annular passage and one or more radial passages to the location above the expansion cone. In an exemplary embodiment, the apparatus further includes means for depressuring the inner and outer tubular sleeves, means for decoupling the outer tubular sleeve and the wellbore casing, and means for collapsing the outer tubular sleeve onto the inner tubular sleeve. In an exemplary embodiment, the apparatus further includes means for injecting a fluidic material into the inner and outer tubular sleeves, means for coupling the outer tubular sleeve to the wellbore casing, means for extending the inner tubular sleeve out of the outer tubular sleeve into the wellbore casing to radially expand and plastically deform another portion of the wellbore casing. In an exemplary embodiment, the means for injecting a fluidic material into the inner and outer tubular sleeves includes means for injecting the fluidic material into an annular chamber above the expansion cone. In an exemplary embodiment, the apparatus further includes means for conveying fluidic materials within the borehole displaced by the extension of the inner tubular sleeve to a location above the expansion cone. In an exemplary embodiment, the means for conveying fluidic materials within the borehole displaced by the extension of the inner tubular sleeve above the expansion cone includes means for conveying fluidic materials within the borehole displaced by the extension of the inner tubular sleeve through an annular passage and one or more radial passages to the location above the expansion cone.

[0054] It is understood that variations may be made in the foregoing without departing from the scope of the invention. For example, the teachings of the present illustrative embodiments may be used to provide a wellbore casing, a pipeline, or a structural support. Furthermore, the elements and teachings of the various illustrative embodiments may be combined in whole or in part in some or all of the illustrative embodiments.

[0055] Although illustrative embodiments of the invention have been shown and described, a wide range of modification, changes and substitution is contemplated in the foregoing disclosure. In some

instances, some features of the present invention may be employed without a corresponding use of the other features. Accordingly, it is appropriate that the appended claims be construed broadly and in a manner consistent with the scope of the invention.

Claims

What is claimed is:

1. A method of forming a mono diameter wellbore casing within a borehole that traverses a subterranean formation, comprising:

positioning a first wellbore casing within the borehole;

radially expanding and plastically deforming the first wellbore casing within the borehole;

positioning a second wellbore casing within the borehole in overlapping relation to the first wellbore casing;

radially expanding and plastically deforming the second wellbore casing within the borehole;

radially expanding and plastically deforming the overlapping portions of the first and second wellbore casings; and

radially expanding and plastically deforming at least a portion of the second wellbore casing that does not overlap with the first wellbore casing;

wherein the inside diameter of the portion of the first wellbore casing that does not overlap with the second wellbore casing is substantially equal to the inside diameter of the radially expanded and plastically deformed portions of the second wellbore casing.

2. The method of claim 1, wherein radially expanding and plastically deforming the overlapping portions of the first and second wellbore casings comprises:

positioning a telescoping radial expansion device comprising an outer sleeve and an inner sleeve positioned within and movably coupled to the outer sleeve comprising a tubular expansion cone proximate the end of the second wellbore casing; and

injecting a fluidic material into the telescoping radial expansion device to cause the outer sleeve to engage the first wellbore casing and cause the inner sleeve to extend out of the outer sleeve into the overlapping portions of the first and second wellbore casings to cause the tubular expansion cone to radially expand and plastically deform the overlapping portions of the first and second wellbore casings.

3. The method of claim 2, further comprising:

conveying fluidic materials within the borehole that are displaced by the extension of the inner sleeve to a location within the borehole above the tubular expansion cone.

4. The method of claim 2, wherein radially expanding and plastically deforming at least a portion of the second wellbore casing that does not overlap with the first wellbore casing comprises:

reducing the operating pressure within the telescoping radial expansion device;

moving the outer sleeve onto the inner sleeve of the telescoping radial expansion device; and

injecting a fluidic material into the telescoping radial expansion device to cause the outer sleeve to engage at least one of the first and second wellbore casings and cause the

inner sleeve to extend out of the outer sleeve into the second wellbore casing to cause the tubular expansion cone to radially expand and plastically deform at least a portion of the second wellbore casing.

5. The method of claim 4, further comprising:

conveying fluidic materials within the borehole that are displaced by the extension of the inner sleeve to a location within the borehole above the tubular expansion cone.

6. An apparatus for forming a mono diameter wellbore casing, comprising:

means for positioning a first wellbore casing within the borehole;

means for radially expanding and plastically deforming the first wellbore casing within the borehole;

means for positioning a second wellbore casing within the borehole in overlapping relation to the first wellbore casing;

means for radially expanding and plastically deforming the second wellbore casing within the borehole;

means for radially expanding and plastically deforming the overlapping portions of the first and second wellbore casings; and

means for radially expanding and plastically deforming at least a portion of the second wellbore casing that does not overlap with the first wellbore casing;

wherein the inside diameter of the portion of the first wellbore casing that does not overlap with the second wellbore casing is substantially equal to the inside diameter of the radially expanded and plastically deformed portions of the second wellbore casing.

7. The apparatus of claim 6, wherein means for radially expanding and plastically deforming the overlapping portions of the first and second wellbore casings comprises:

means for positioning a telescoping radial expansion device comprising an outer sleeve and an inner sleeve positioned within and movably coupled to the outer sleeve comprising a tubular expansion cone proximate the end of the second wellbore casing; and

means for injecting a fluidic material into the telescoping radial expansion device to cause the outer sleeve to engage the first wellbore casing and cause the inner sleeve to extend out of the outer sleeve into the overlapping portions of the first and second wellbore casings to cause the tubular expansion cone to radially expand and plastically deform the overlapping portions of the first and second wellbore casings.

8. The method of claim 7, further comprising:

conveying fluidic materials within the borehole that are displaced by the extension of the inner sleeve to a location within the borehole above the tubular expansion cone.

9. The apparatus of claim 7, wherein means for radially expanding and plastically deforming at least a portion of the second wellbore casing that does not overlap with the first wellbore casing

comprises:

means for reducing the operating pressure within the telescoping radial expansion device;

means for moving the outer sleeve onto the inner sleeve of the telescoping radial expansion device; and

means for injecting a fluidic material into the telescoping radial expansion device to cause the outer sleeve to engage at least one of the first and second wellbore casings and cause the inner sleeve to extend out of the outer sleeve into the second wellbore casing to cause the tubular expansion cone to radially expand and plastically deform at least a portion of the second wellbore casing.

10. The method of claim 9, further comprising:

conveying fluidic materials within the borehole that are displaced by the extension of the inner sleeve to a location within the borehole above the tubular expansion cone.

11. An apparatus for radially expanding and plastically deforming a tubular member, comprising:

a tubular adapter defining a longitudinal passage;

a tubular outer sleeve coupled to the tubular adapter defining a longitudinal passage;

a tubular hydraulic slip body coupled to the tubular outer sleeve defining a plurality of L-shaped bypass ports and a plurality of radial hydraulic slip mounting passages;

a plurality of hydraulic slips movably coupled and positioned within corresponding radial hydraulic slip mounting passages for engaging the tubular member;

a tubular packer cup mandrel coupled to the tubular hydraulic slip body defining a longitudinal passage;

a plurality of packer cups coupled to the tubular packer cup mandrel for sealingly engaging the tubular member;

a tubular shoe positioned within and movably coupled to the tubular outer sleeve defining a longitudinal passage;

a tubular inner mandrel positioned within and movably coupled to the tubular hydraulic slip body coupled to the tubular shoe defining a longitudinal passage and a plurality of radial bypass ports;

a tubular expansion cone mandrel coupled to the tubular inner mandrel defining a longitudinal passage having a throat passage for receiving a ball, an L-shaped bypass port, and a radial pressure port;

a tubular expansion cone coupled to the tubular expansion cone including a tapered outer expansion surface for radially expanding and plastically deforming the tubular member;

a tubular guide nose coupled to the tubular expansion cone mandrel defining a longitudinal passage;

a bypass tube positioned within the tubular inner mandrel coupled to the expansion cone mandrel and the tubular shoe defining a longitudinal passage; and

an annular longitudinal bypass passage defined between the tubular inner mandrel and the bypass tube.

12. The apparatus of claim 11, wherein the longitudinal passages of the tubular adapter, bypass tube, and tubular expansion cone mandrel are fluidicly coupled.

13. The apparatus of claim 11, wherein the longitudinal passage of the tubular expansion cone mandrel is fluidicly coupled to the radial pressure port of the tubular expansion cone mandrel.

14. The apparatus of claim 11, wherein the L-shaped bypass port of the tubular expansion cone mandrel is fluidicly coupled to the annular longitudinal bypass passage, the radial bypass passages of the tubular inner mandrel, the L-shaped bypass ports of the tubular hydraulic slip body, and the radial bypass ports of the tubular outer sleeve.

15. An apparatus for radially expanding and plastically deforming a tubular member, comprising:

a tubular support member defining a longitudinal passage;

a tubular outer sleeve coupled to the tubular support member defining a longitudinal passage and a plurality of radial bypass ports;

an hydraulic slip coupled to the tubular outer sleeve for controllably engaging the tubular member;

one or more packer cups coupled to the tubular outer sleeve for sealingly engaging the tubular member;

a tubular inner sleeve positioned within and movably coupled to the tubular outer sleeve defining a longitudinal passage, an annular longitudinal bypass passage, and one or more radial bypass passages; and

a tubular expansion cone coupled to the tubular inner sleeve defining a longitudinal passage having a throat passage for receiving a ball, an L-shaped bypass port, and a radial pressure port including an tapered outer expansion surface for radially expanding and plastically deforming the tubular member.

16. The apparatus of claim 15, wherein the longitudinal passages of the tubular outer sleeve and the tubular expansion cone are fluidicly coupled.

17. The apparatus of claim 15, wherein the longitudinal passage of the tubular expansion cone is fluidicly coupled to the radial pressure port of the tubular expansion cone.

18. The apparatus of claim 15, wherein the L-shaped bypass port of the tubular expansion cone is fluidicly coupled to the annular longitudinal bypass passage and the radial bypass passages of the tubular inner sleeve, and the L-shaped bypass ports and the radial bypass ports of the tubular outer sleeve.

19. A method of radially expanding and plastically deforming a wellbore casing positioned within

a borehole that traverses a subterranean formation, comprising:

positioning an outer tubular sleeve and an inner tubular sleeve comprising an expansion cone within the borehole, wherein the inner tubular sleeve is movably coupled to and at least partially housed within the outer tubular sleeve;

injecting a fluidic material into the inner and outer tubular sleeves;

coupling the outer tubular sleeve to the wellbore casing; and

extending the inner tubular sleeve out of the outer tubular sleeve into the wellbore casing to radially expand and plastically deform a portion of the wellbore casing using the expansion cone.

20. The method of claim 19, wherein injecting a fluidic material into the inner and outer tubular sleeves comprises:

injecting the fluidic material into an annular chamber above the expansion cone.

21. The method of claim 19, further comprising:

conveying fluidic materials within the borehole displaced by the extension of the inner tubular sleeve to a location above the expansion cone.

22. The method of claim 21, wherein conveying fluidic materials within the borehole displaced by the extension of the inner tubular sleeve above the expansion cone comprises:

conveying fluidic materials within the borehole displaced by the extension of the inner tubular sleeve through an annular passage and one or more radial passages to the location above the expansion cone.

23. The method of claim 19, further comprising:

depressuring the inner and outer tubular sleeves;

decoupling the outer tubular sleeve and the wellbore casing; and

collapsing the outer tubular sleeve onto the inner tubular sleeve.

24. The method of claim 23, further comprising:

injecting a fluidic material into the inner and outer tubular sleeves;

coupling the outer tubular sleeve to the wellbore casing;

extending the inner tubular sleeve out of the outer tubular sleeve into the wellbore casing to radially expand and plastically deform another portion of the wellbore casing.

25. The method of claim 24, wherein injecting a fluidic material into the inner and outer tubular sleeves comprises:

injecting the fluidic material into an annular chamber above the expansion cone.

26. The method of claim 24, further comprising:

conveying fluidic materials within the borehole displaced by the extension of the inner tubular sleeve to a location above the expansion cone.

27. The method of claim 26, wherein conveying fluidic materials within the borehole displaced by

the extension of the inner tubular sleeve above the expansion cone comprises:

conveying fluidic materials within the borehole displaced by the extension of the inner tubular sleeve through an annular passage and one or more radial passages to the location above the expansion cone.

28. An apparatus for radially expanding and plastically deforming a wellbore casing positioned within a borehole that traverses a subterranean formation, comprising:

means for positioning an outer tubular sleeve and an inner tubular sleeve comprising an expansion cone within the borehole, wherein the inner tubular sleeve is movably coupled to and at least partially housed within the outer tubular sleeve;

means for injecting a fluidic material into the inner and outer tubular sleeves;

means for coupling the outer tubular sleeve to the wellbore casing; and

means for extending the inner tubular sleeve out of the outer tubular sleeve into the wellbore casing to radially expand and plastically deform a portion of the wellbore casing using the expansion cone.

29. The apparatus of claim 28, wherein means for injecting a fluidic material into the inner and outer tubular sleeves comprises:

means for injecting the fluidic material into an annular chamber above the expansion cone.

30. The apparatus of claim 28, further comprising:

means for conveying fluidic materials within the borehole displaced by the extension of the inner tubular sleeve to a location above the expansion cone.

31. The apparatus of claim 30, wherein means for conveying fluidic materials within the borehole displaced by the extension of the inner tubular sleeve above the expansion cone comprises:

means for conveying fluidic materials within the borehole displaced by the extension of the inner tubular sleeve through an annular passage and one or more radial passages to the location above the expansion cone.

32. The apparatus of claim 28, further comprising:

means for depressuring the inner and outer tubular sleeves;

means for decoupling the outer tubular sleeve and the wellbore casing; and

means for collapsing the outer tubular sleeve onto the inner tubular sleeve.

33. The apparatus of claim 32, further comprising:

means for injecting a fluidic material into the inner and outer tubular sleeves;

means for coupling the outer tubular sleeve to the wellbore casing;

means for extending the inner tubular sleeve out of the outer tubular sleeve into the wellbore casing to radially expand and plastically deform another portion of the wellbore casing.

34. The apparatus of claim 33, wherein means for injecting a fluidic material into the inner and

outer tubular sleeves comprises:

means for injecting the fluidic material into an annular chamber above the expansion cone.

35. The apparatus of claim 33, further comprising:

means for conveying fluidic materials within the borehole displaced by the extension of the inner tubular sleeve to a location above the expansion cone.

36. The apparatus of claim 35, wherein means for conveying fluidic materials within the borehole displaced by the extension of the inner tubular sleeve above the expansion cone comprises:

means for conveying fluidic materials within the borehole displaced by the extension of the inner tubular sleeve through an annular passage and one or more radial passages to the location above the expansion cone.

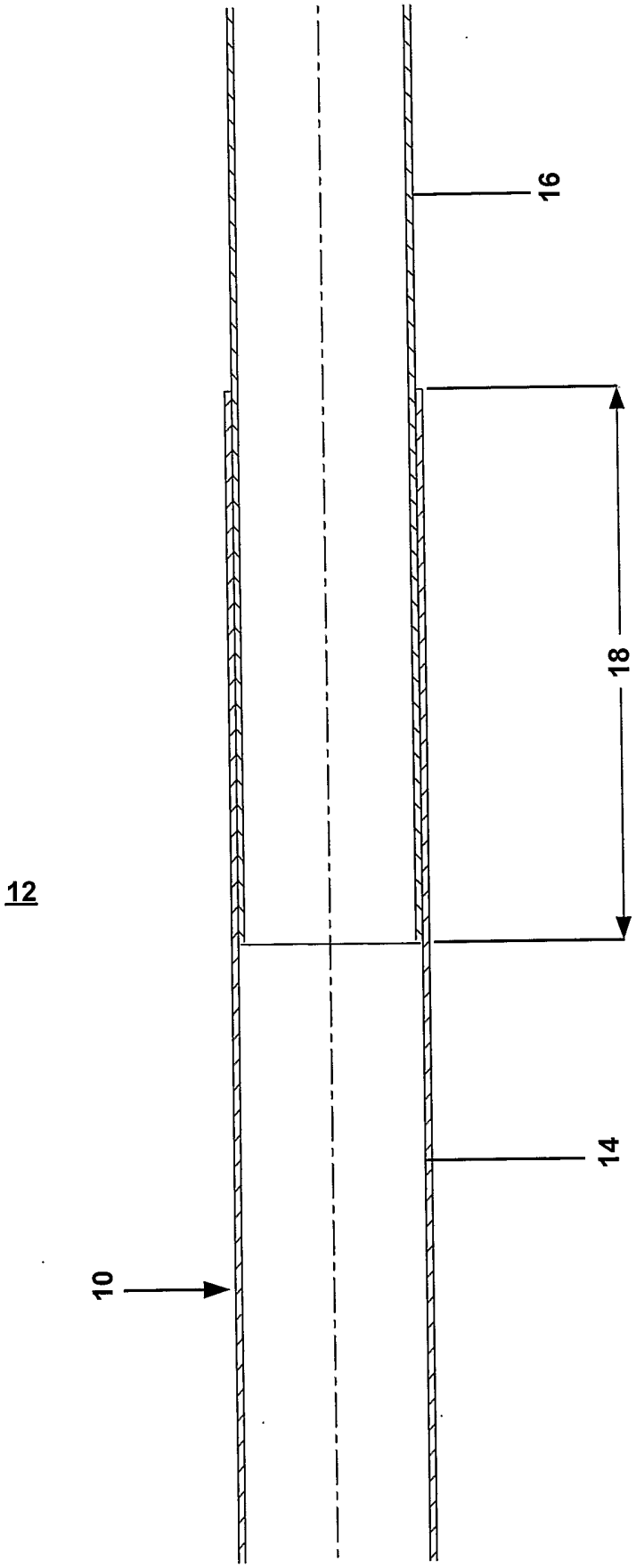

FIG. 1

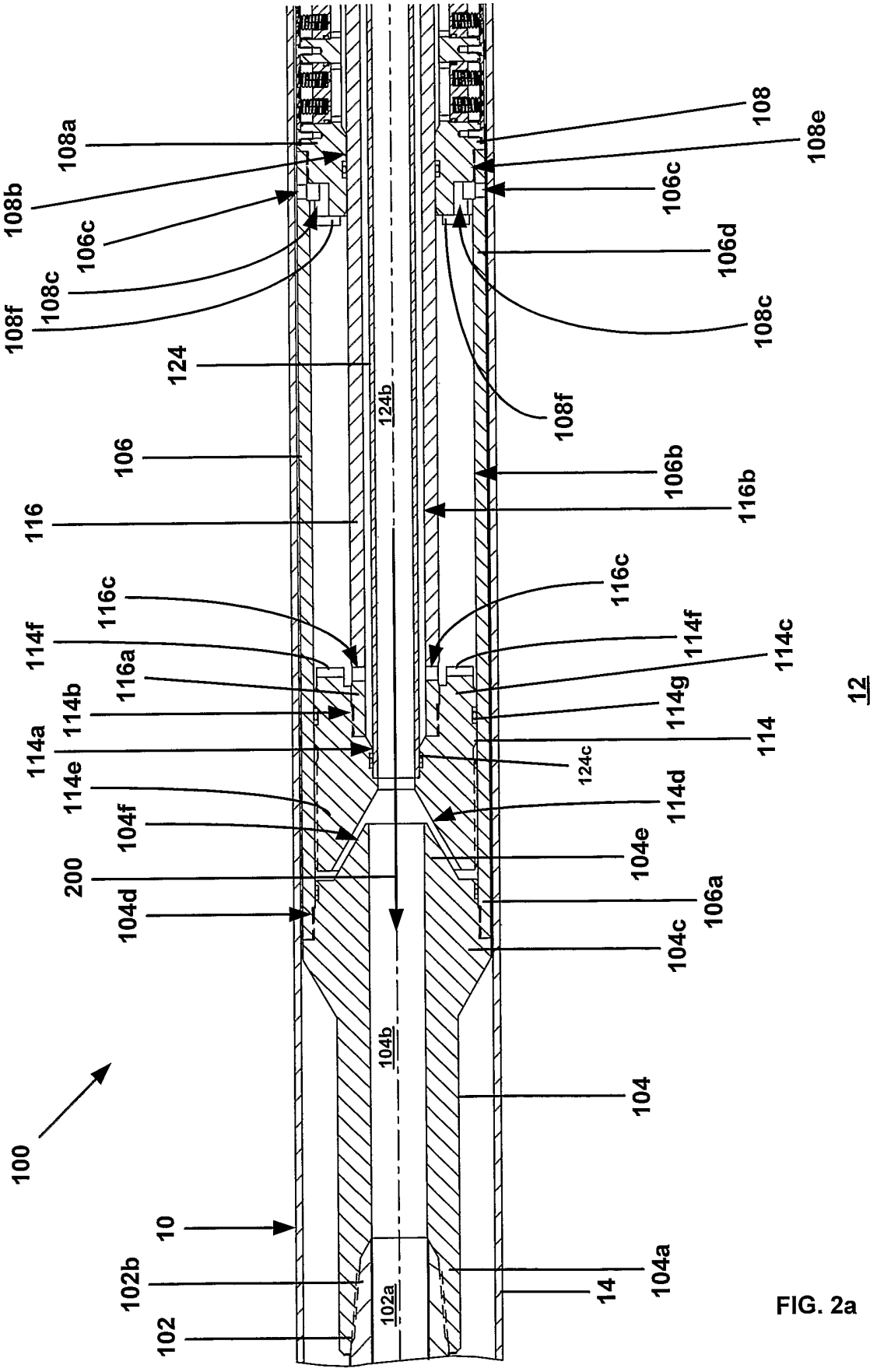
108a
108b
106c
108c
108f
124
106
116
116c
114f
116a
114b
114a
114e
104f
200
104d
100
10
102b
102
102a
104b
124b
108
108e
106c
106d
108c
108f
106b
116b
116c
114f
114c
114g
114
124c
114d
104e
106a
104c
104
104a
14
12

FIG. 2a

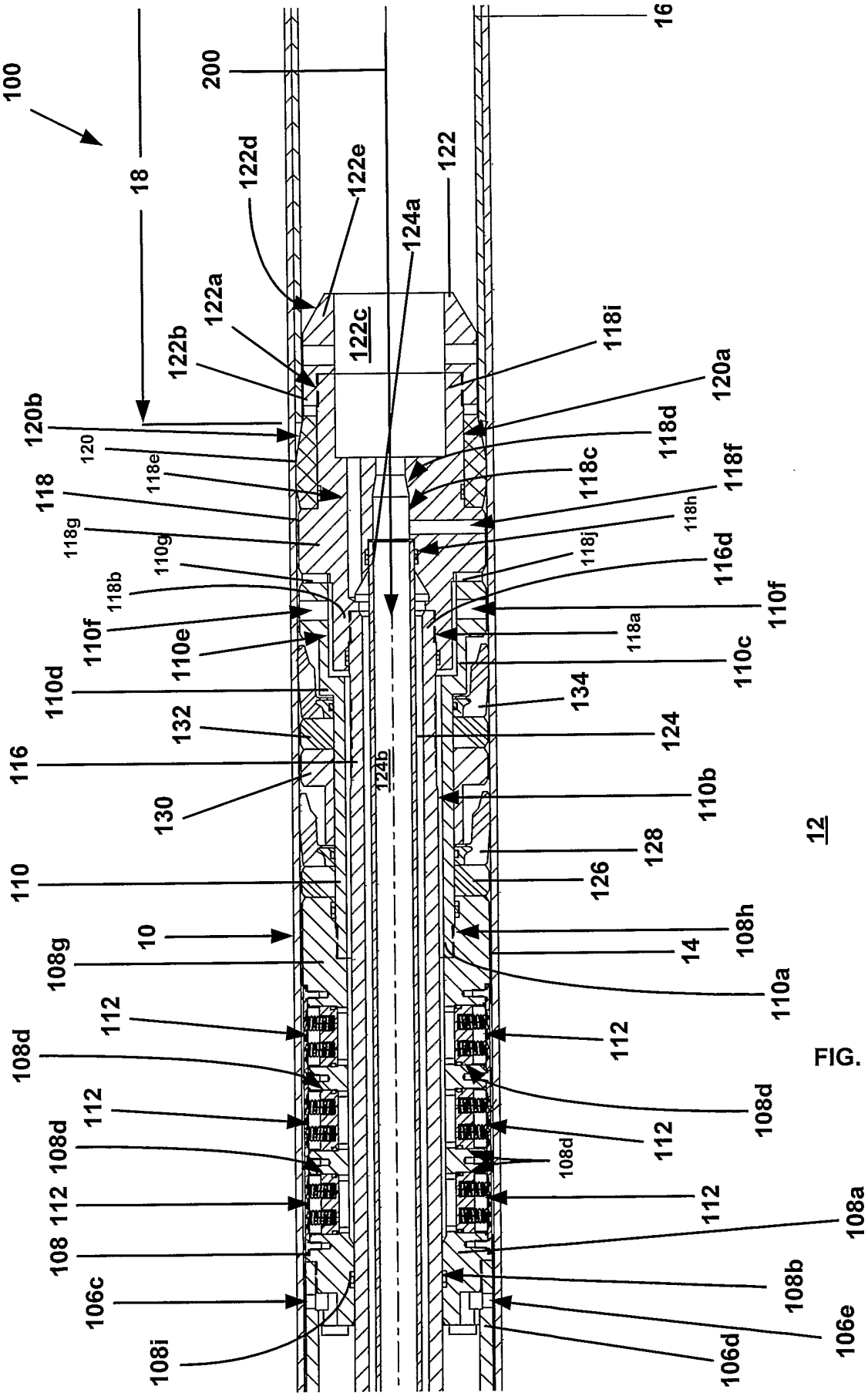
100
18
200
16
122d
122e
122
124a
122a
122c
122b
118i
120b
120a
120
118d
118e
118c
118
118f
118g
118h
110g
118j
116d
118b
110f
110f
110e
118a
110c
110d
134
132
124
116
124b
110b
130
128
12
110
126
10
108h
108g
14
110a
112
112
108d
108d
112
112
108d
108d
112
112
108a
108 112
108
108b
106c
106e
108i
106d

FIG. 2b

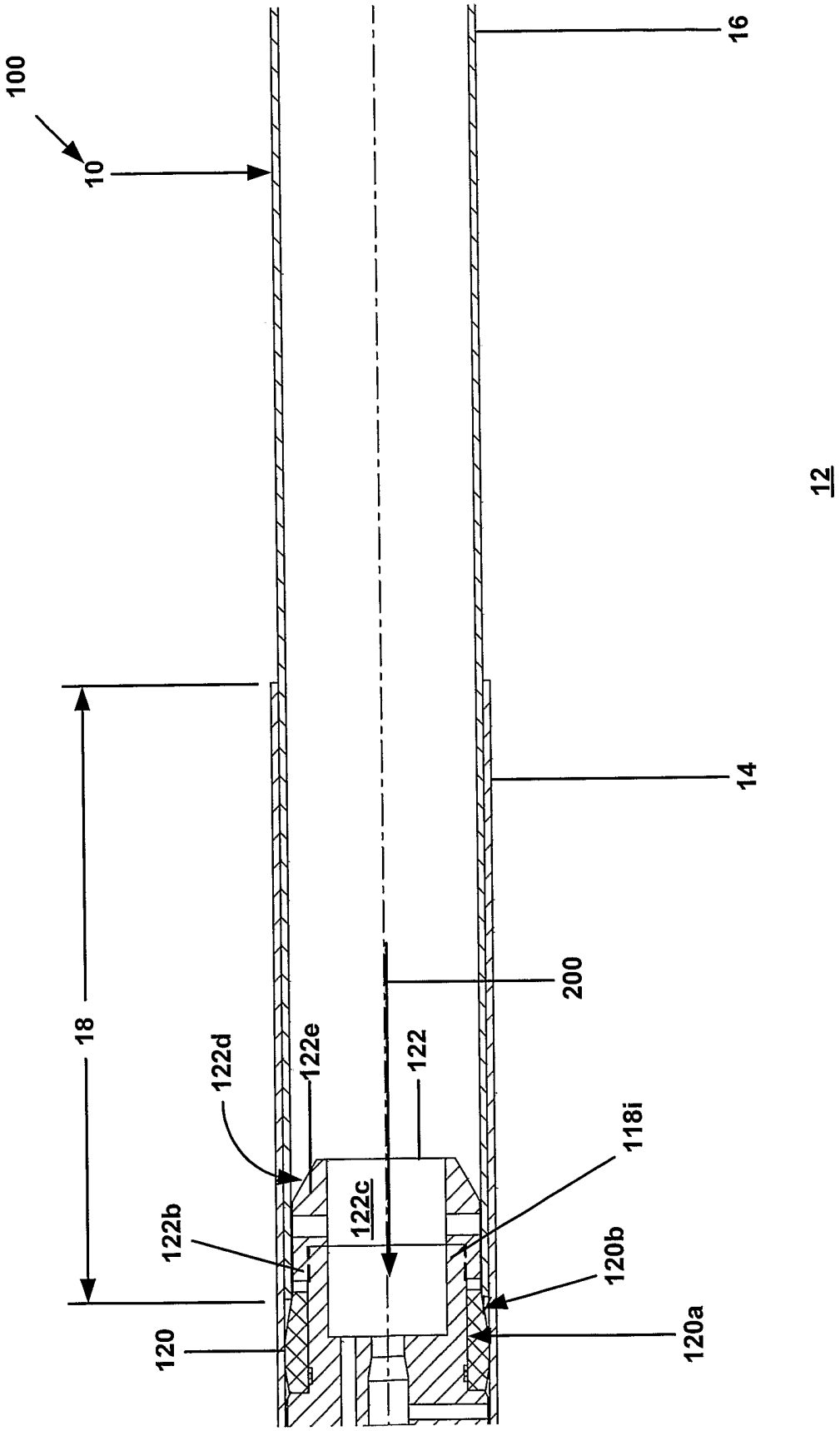
100
10
16
12
14
18
200
122d
122e
122
122c
118i
122b
120b
120
120a

FIG. 2c

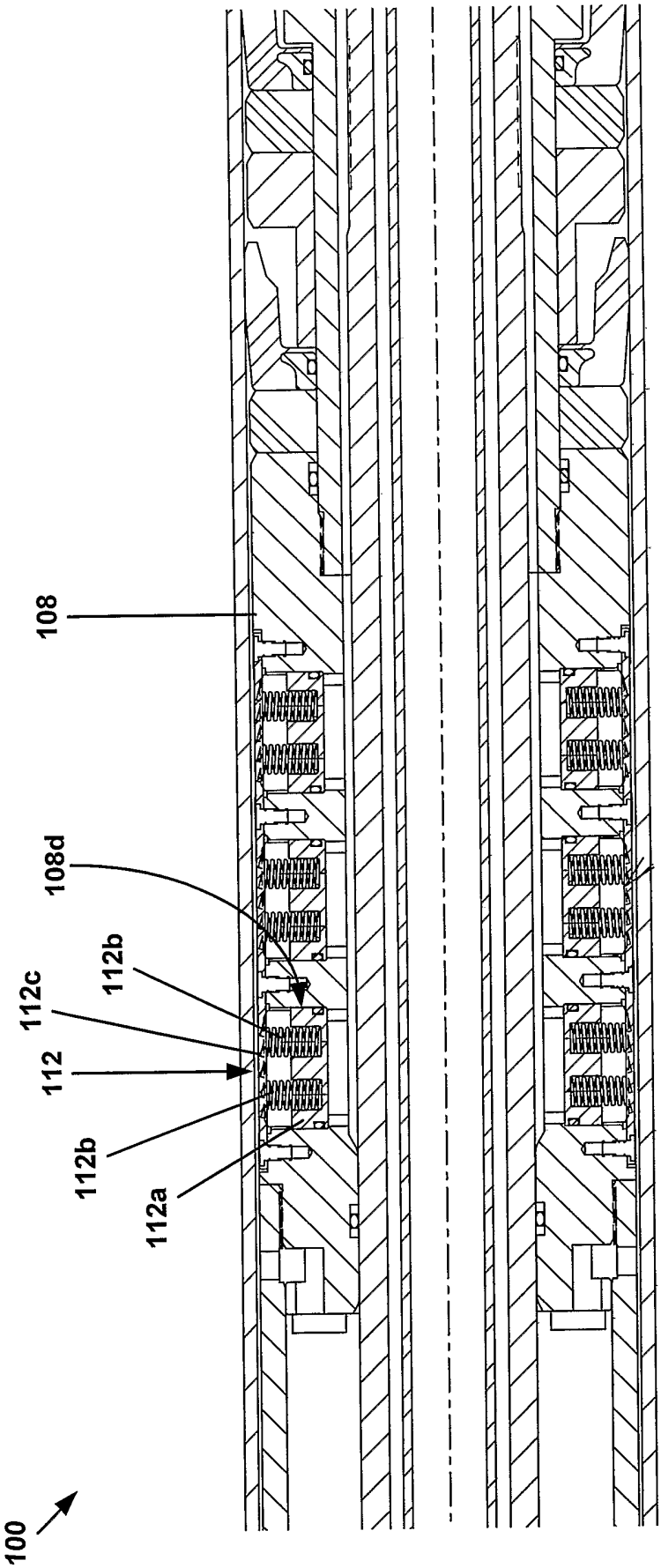

FIG. 2d

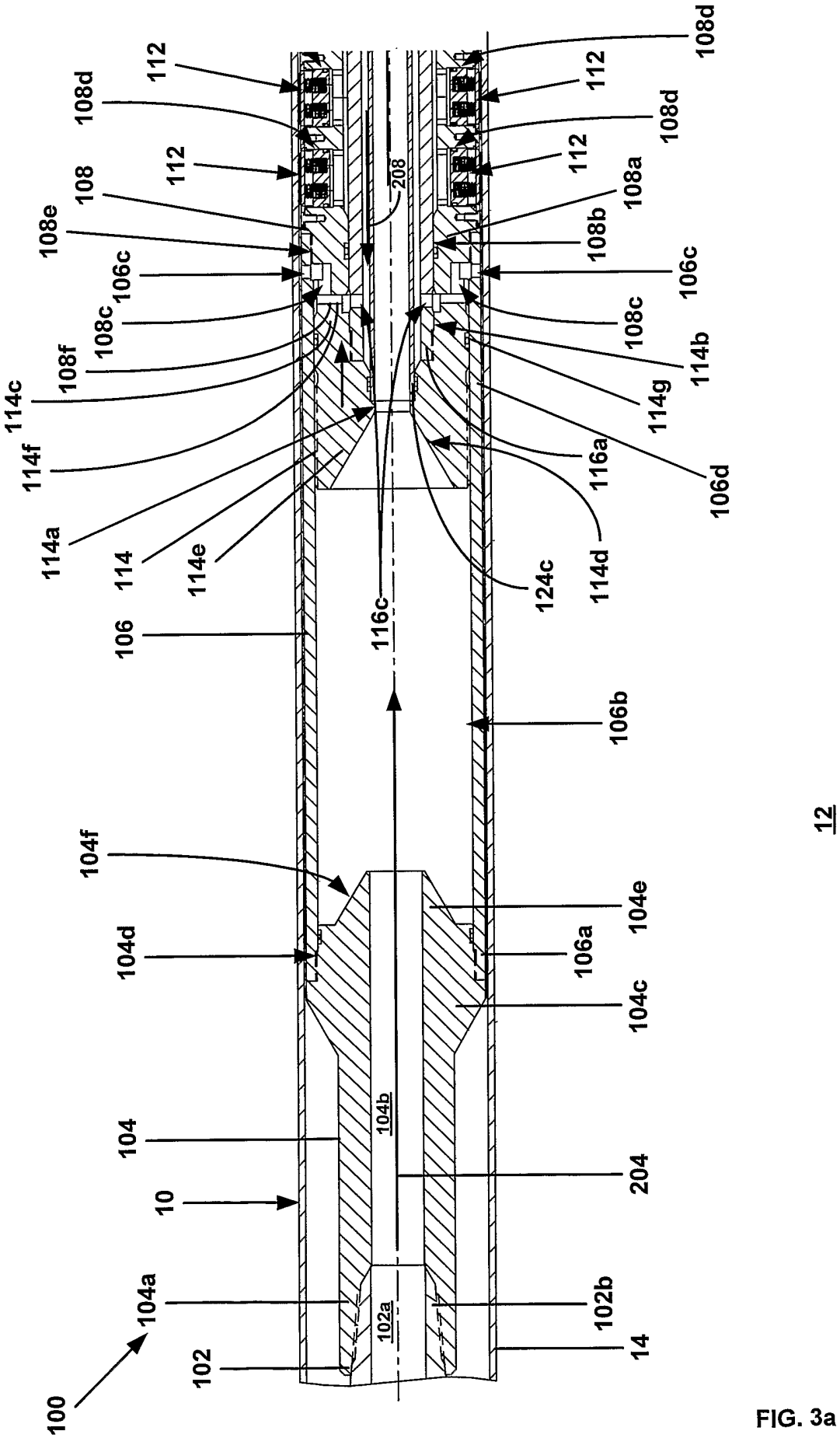
100
102
104a
10
104
104b
102a
104d
104f
106
114
114a
114e
114f
114c
108f
108c
106c
108e
108
112
108d
112
108d
112
208
116c
124c
114d
116a
106d
114g
114b
108c
106c
108b
108a
112
108d
112
106b
104e
106a
104c
204
102b
14
12

FIG. 3a

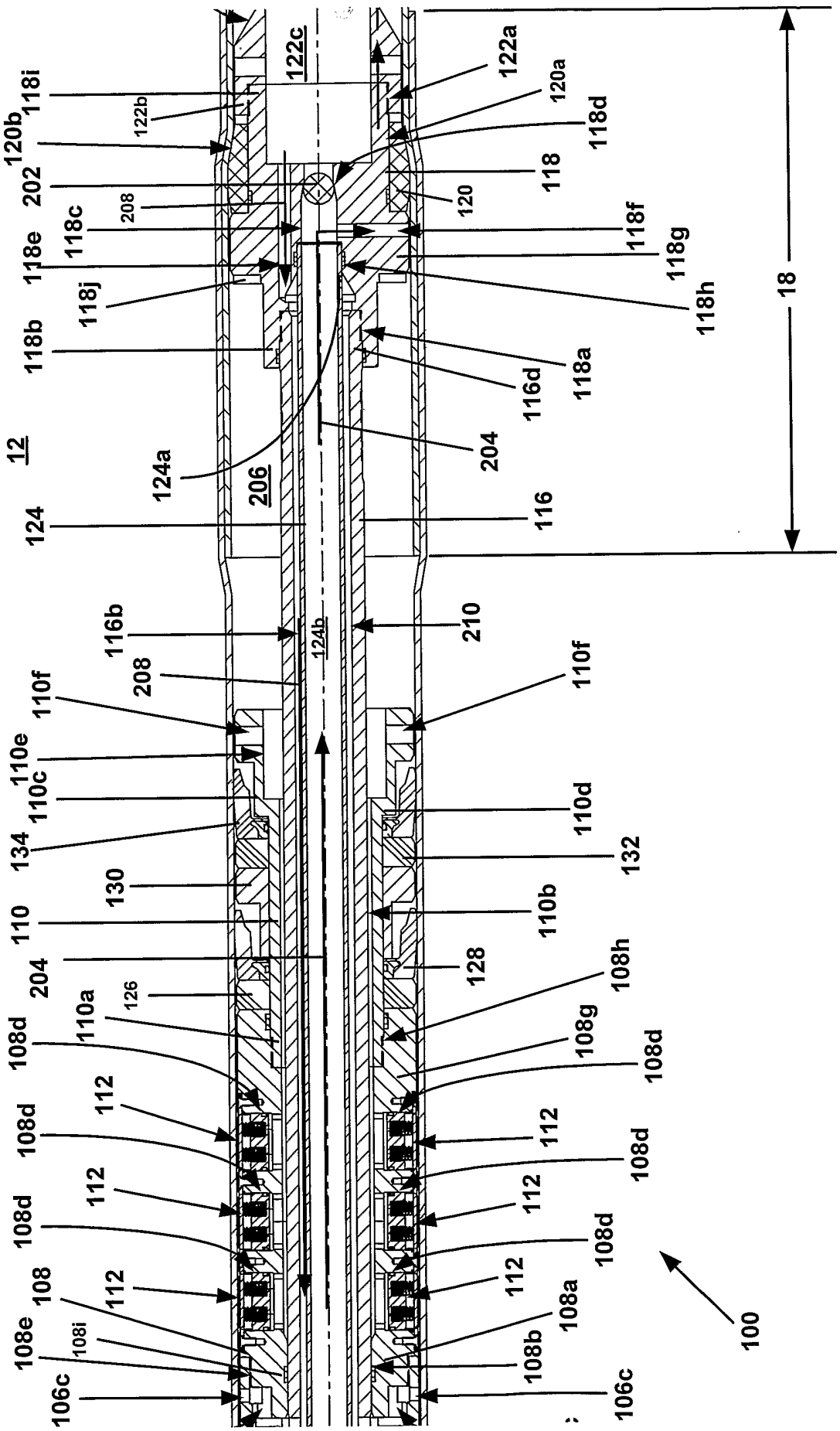
12
124
124a
206
202
204
208
118i
120b
122b
122c
122a
120a
118d
118
120
118f
118g
118h
118a
116d
116
18
118b
118e
118c
118j
116b
124b
210
110f
110e
110c
134
130
110
110d
132
110b
128
108h
108g
108d
108
108e
108i
106c
112
126
110a
108a
108b
100

FIG. 3b

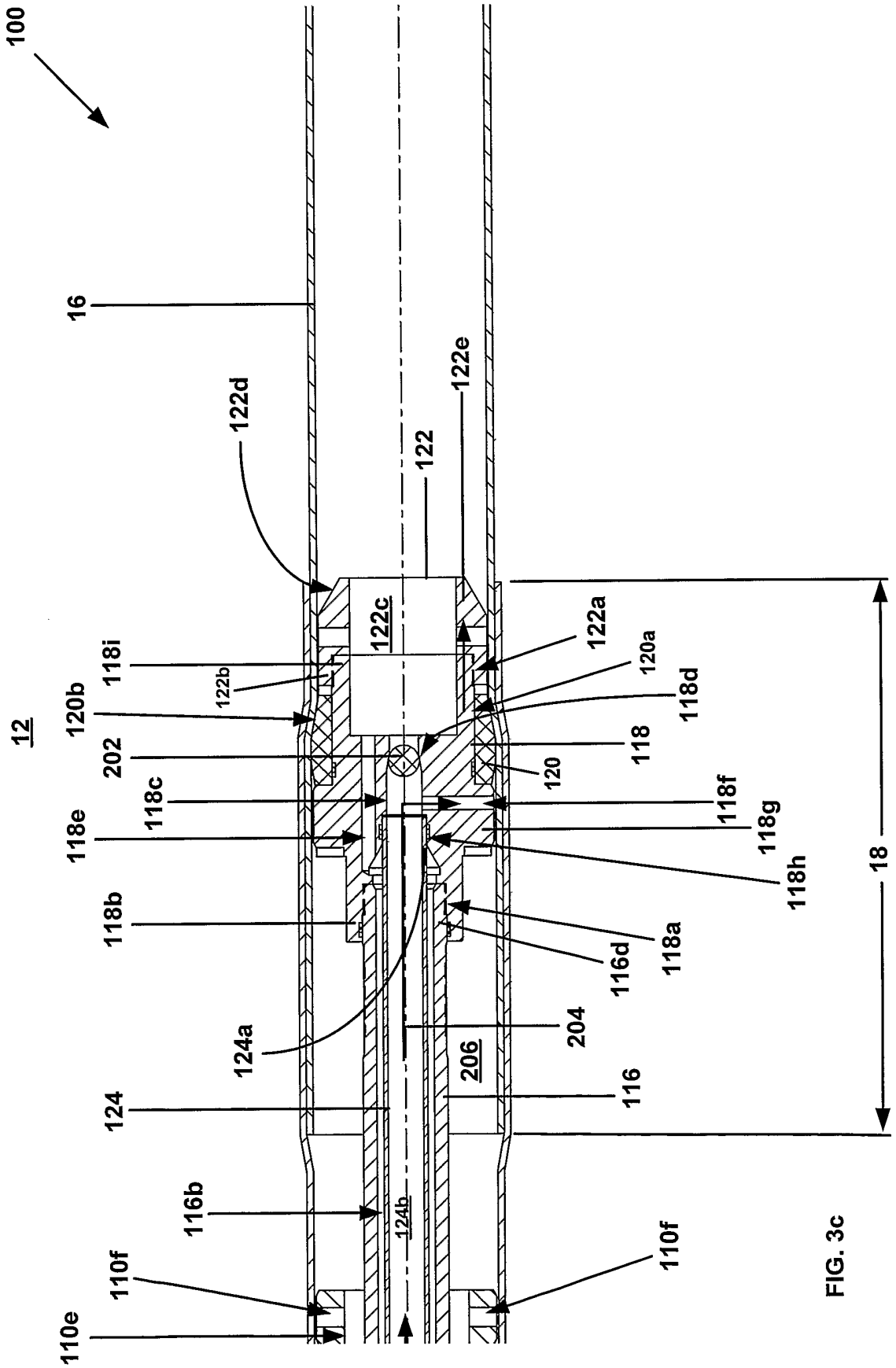
100
12
16
122d
122e
122
122c
122a
120a
118d
118
120
118f
118g
118h
118a
116d
204
206
116
18
124a
124
124b
116b
110f
110e
118i
122b
120b
202
118c
118e
118b

FIG. 3c

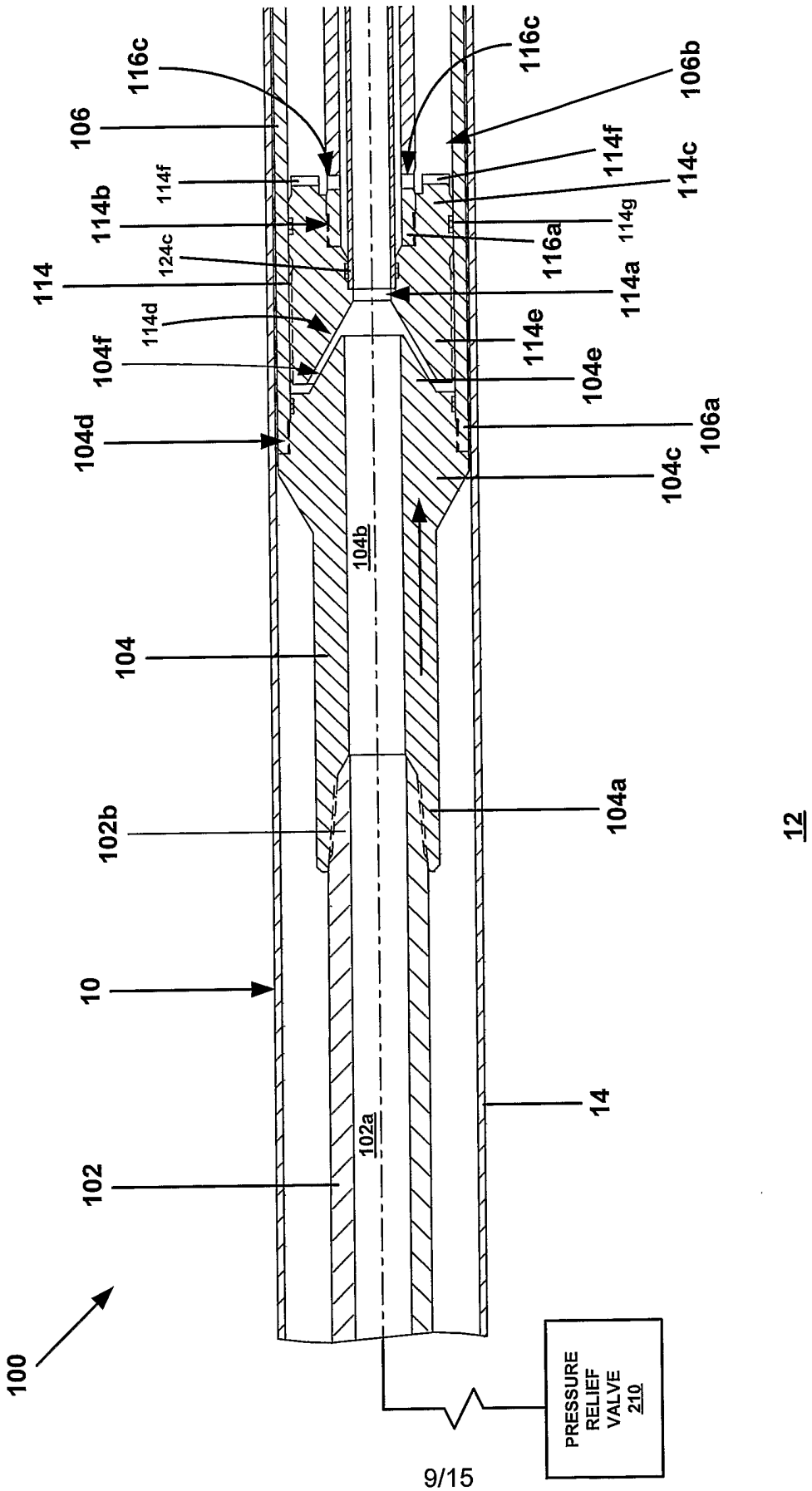
100
102
102a
10
102b
104
104b
104d
104f
114
114d
124c
114b
114f
106
116c
116c
106b
114f
114c
114g
116a
114a
114e
104e
106a
104c
104a
14
12
PRESSURE RELIEF VALVE 210

FIG. 4a

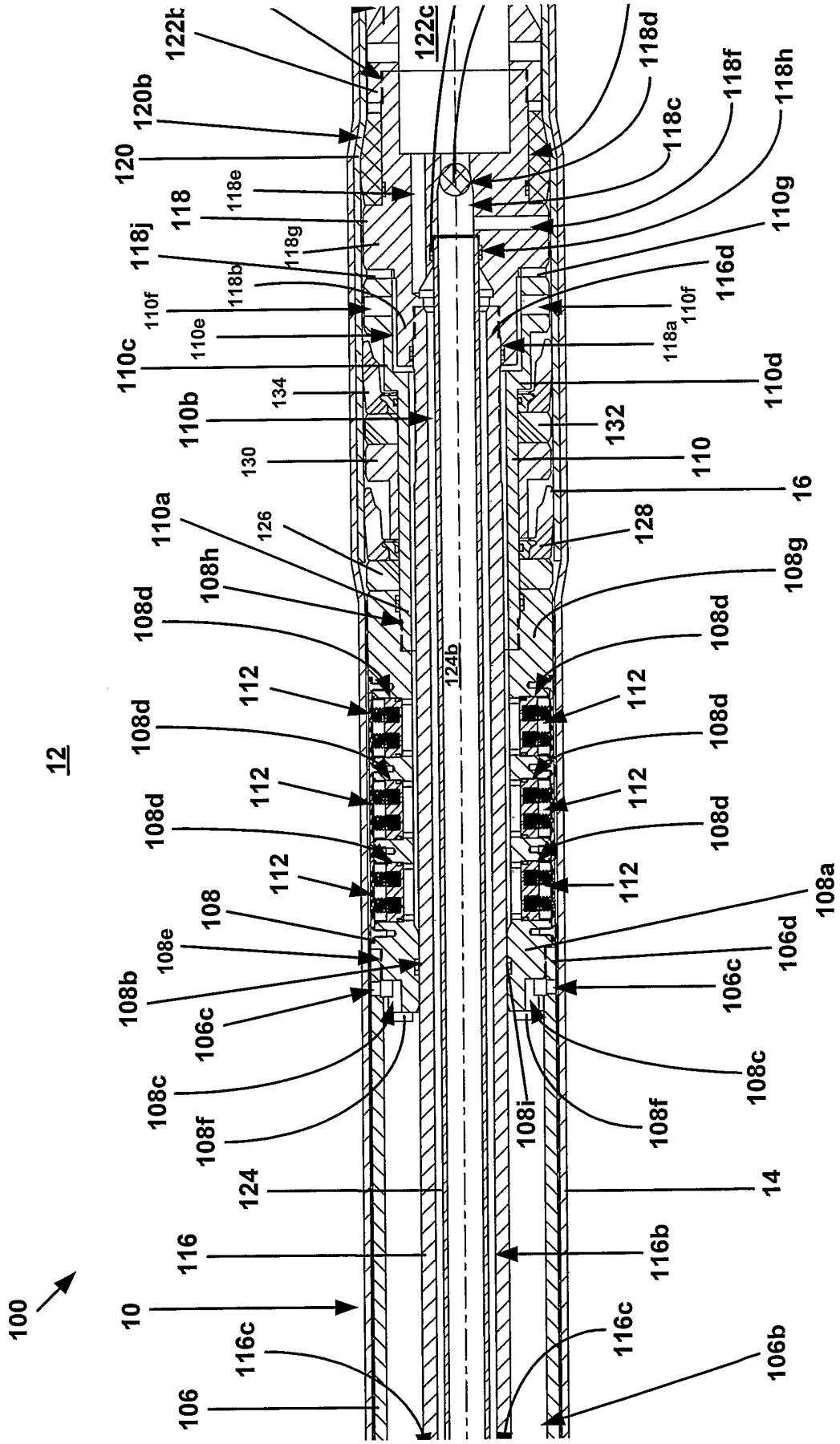
100
12
10
106
116c
116
124
108f
108c
106c
108b
108e
108
112
108d
110a
108h
126
110b
130
134
110c
110e
110f
118j
118b
118g
118
118e
120
120b
122b
122c
124b
118d
118c
118f
118h
110g
116d
118a
110d
132
110
16
128
108g
108a
106d
106c
108c
108f
108i
14
116b
106b

Fig. 4b

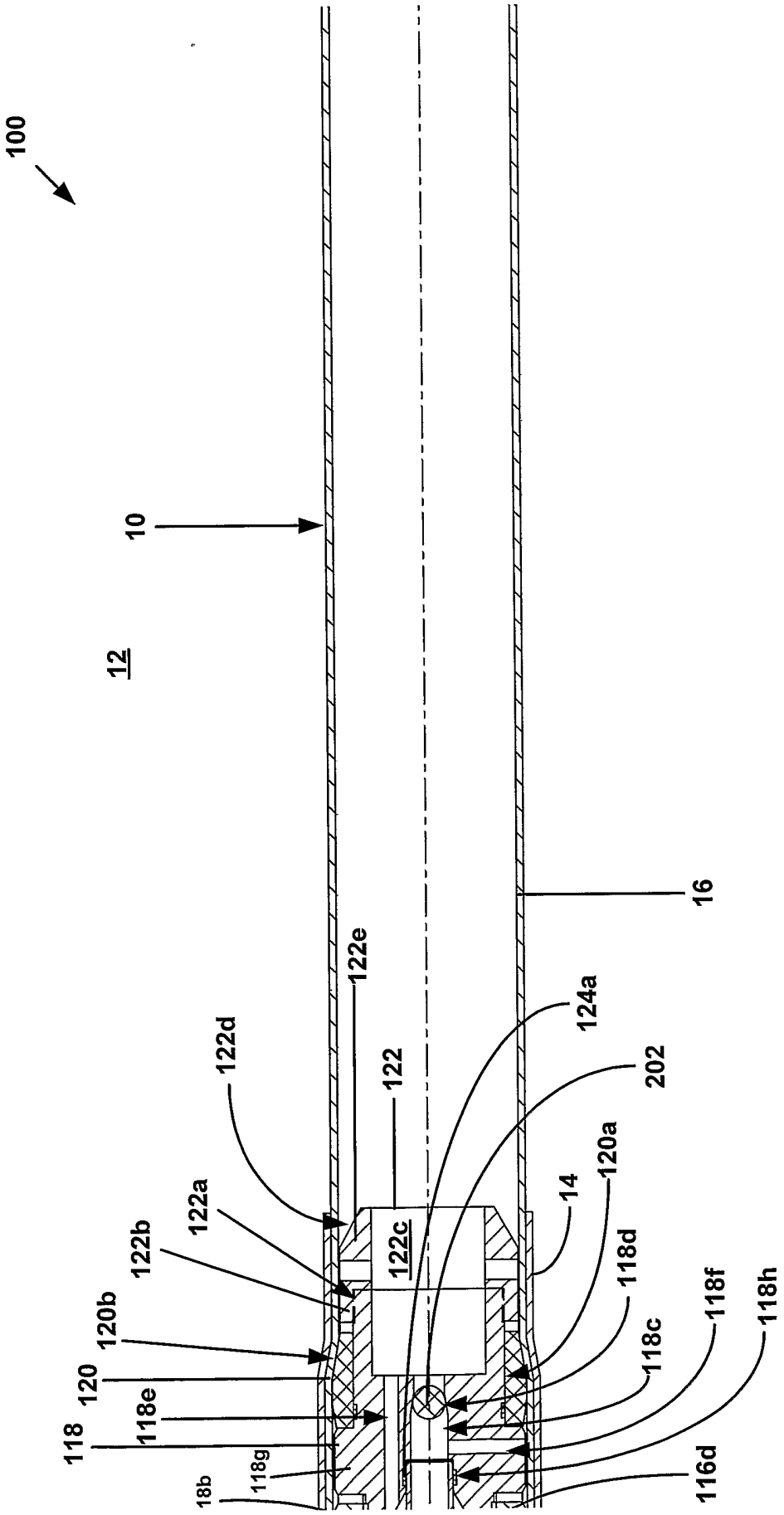
100
10
12
16
122e
122d
122
124a
202
122a
122c
14
120a
122b
118d
120b
118f
118h
118c
120
118e
118
118g
18b
116d

Fig. 4c

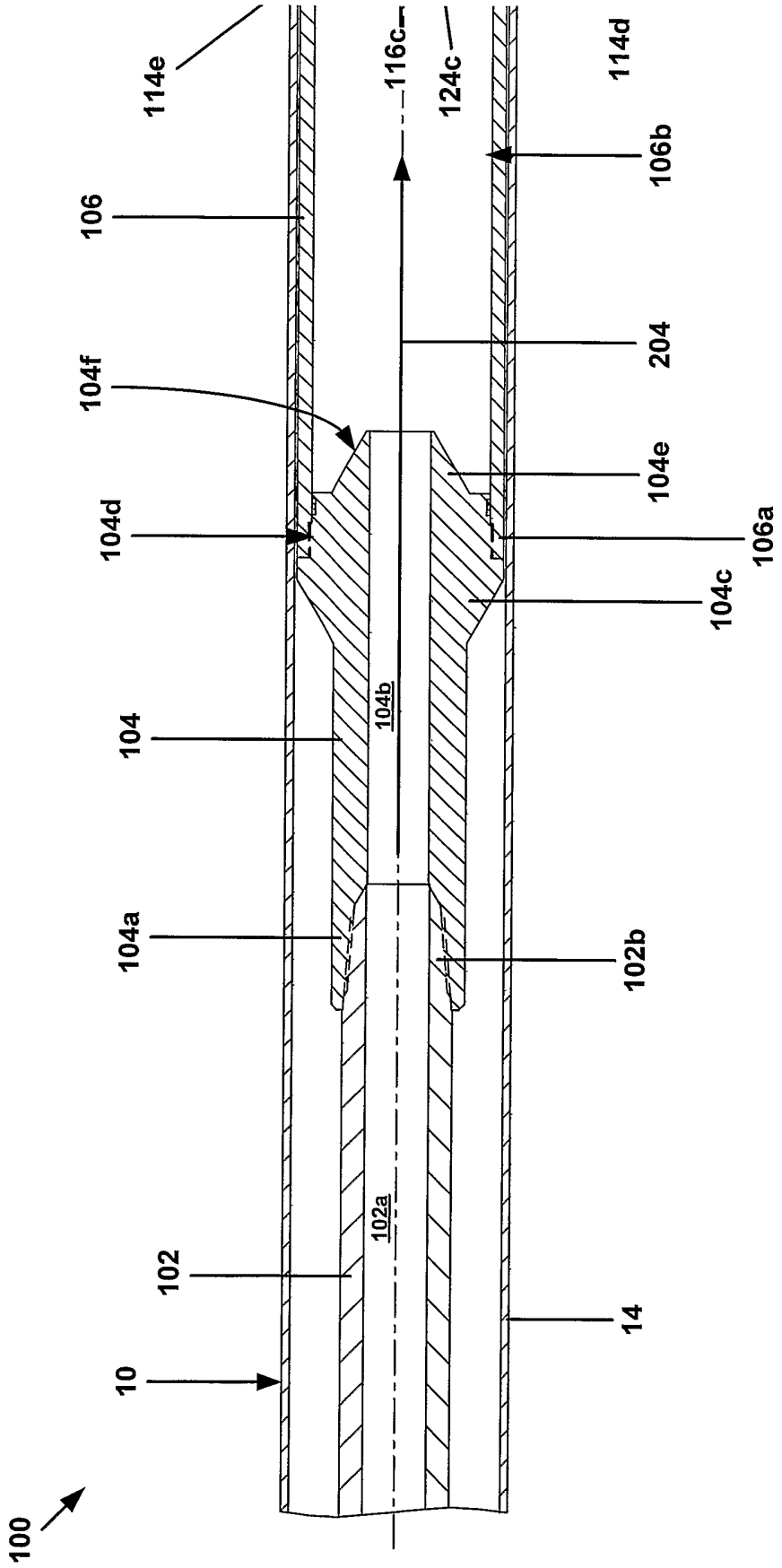
100
10
102
104a
104
104d
104f
106
114e
102a
104b
116c
124c
102b
14
104c
106a
104e
204
106b
114d

FIG. 5a

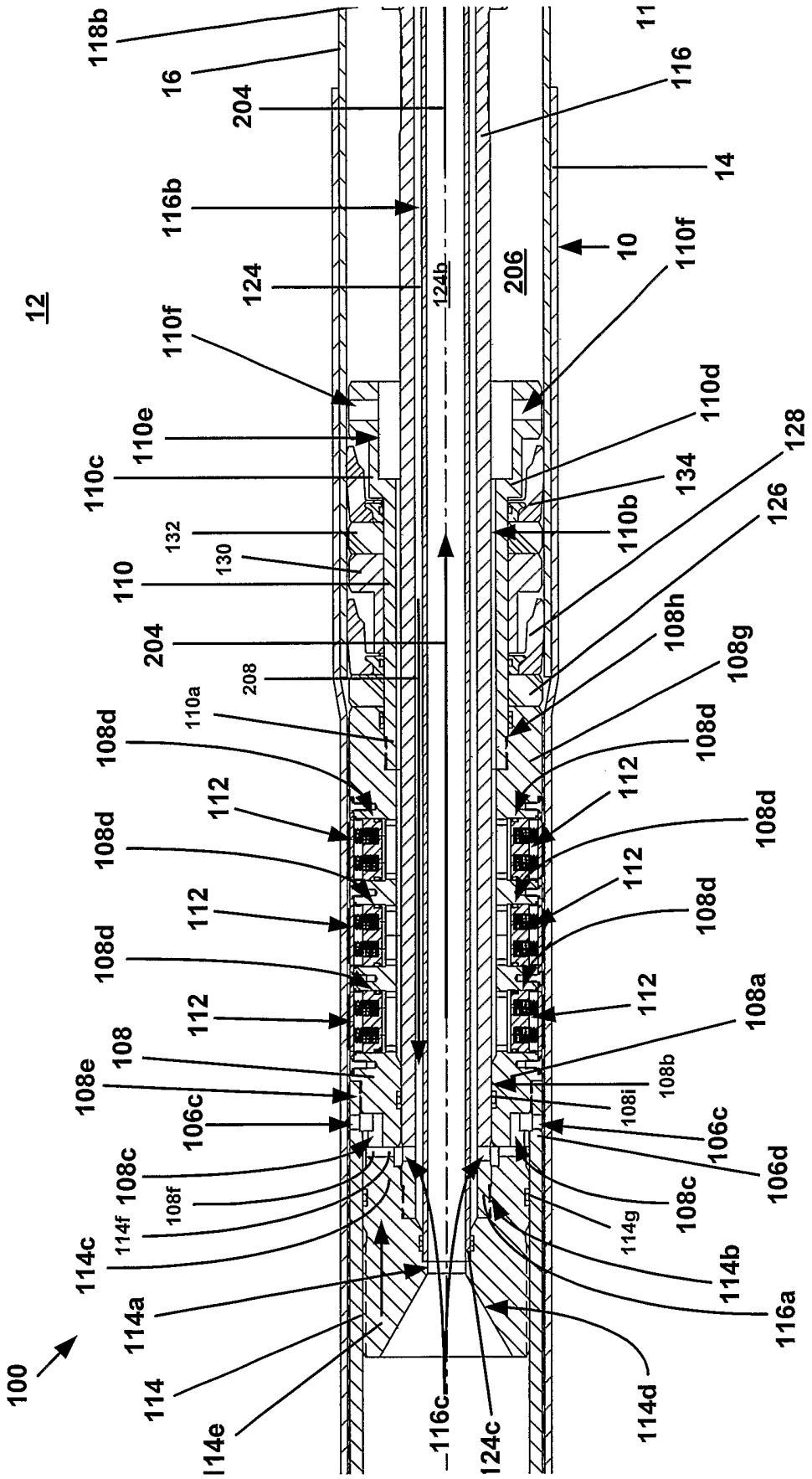
12
118b
16
204
116b
124
110f
110e
110c
132
130
110
204
208
110a
108d
112
108d
112
108d
112
108
108e
106c
108c
108f
114f
114c
114a
114
114e
100
116c
124c
124b
206
11
116
14
10
110f
110d
128
134
126
110b
108h
108g
108d
112
108d
112
108d
112
108a
108b
108i
106c
106d
108c
114g
114b
116a
114d

Fig. 5b

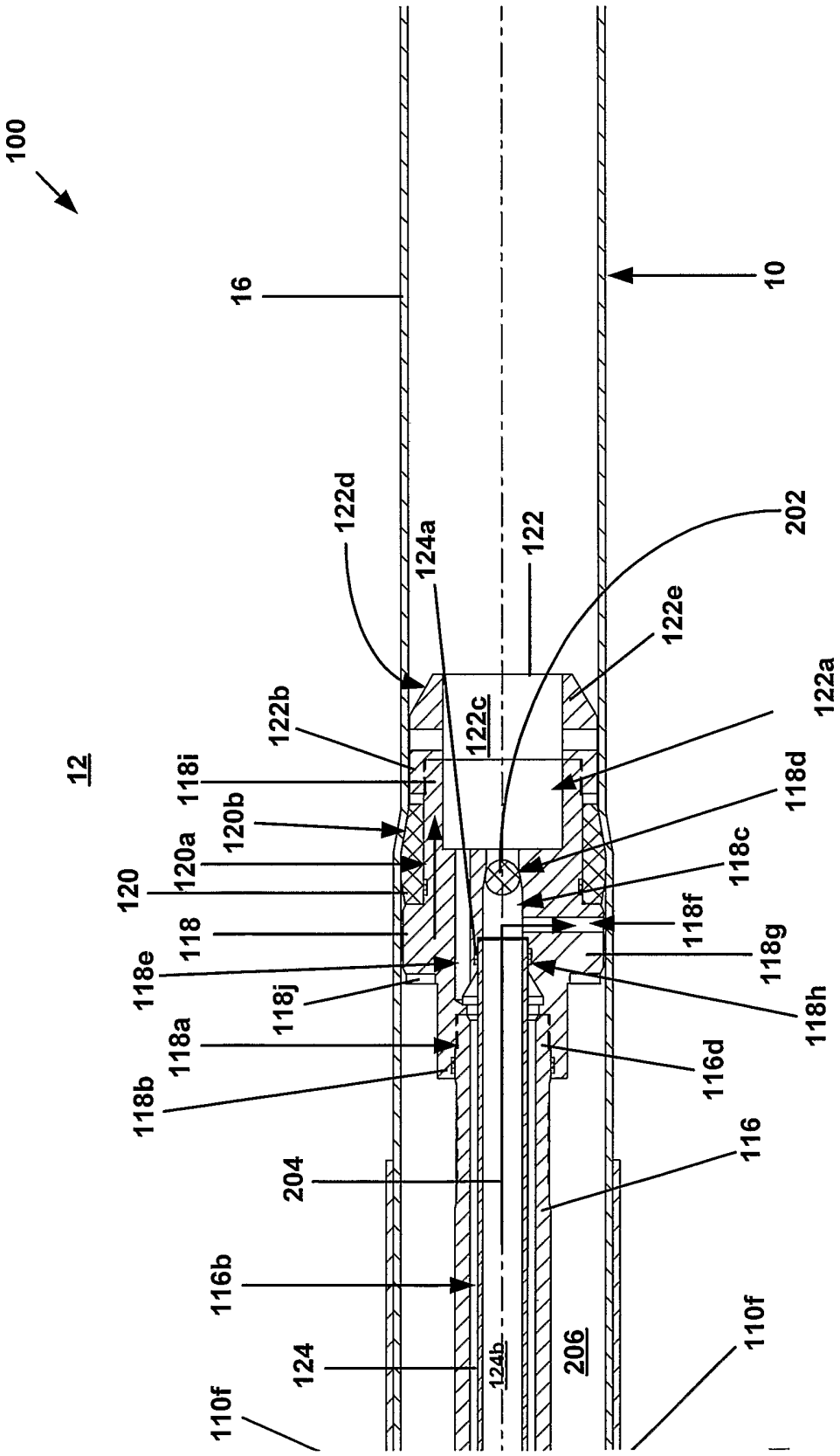
100
12
16
10
122d
124a
122
202
122e
122b
122c
122a
118i
118d
120b
120a
118c
120
118f
118
118g
118e
118j
118h
118a
116d
118b
116
204
116b
110f
124
124b
206
110f

Fig. 5c

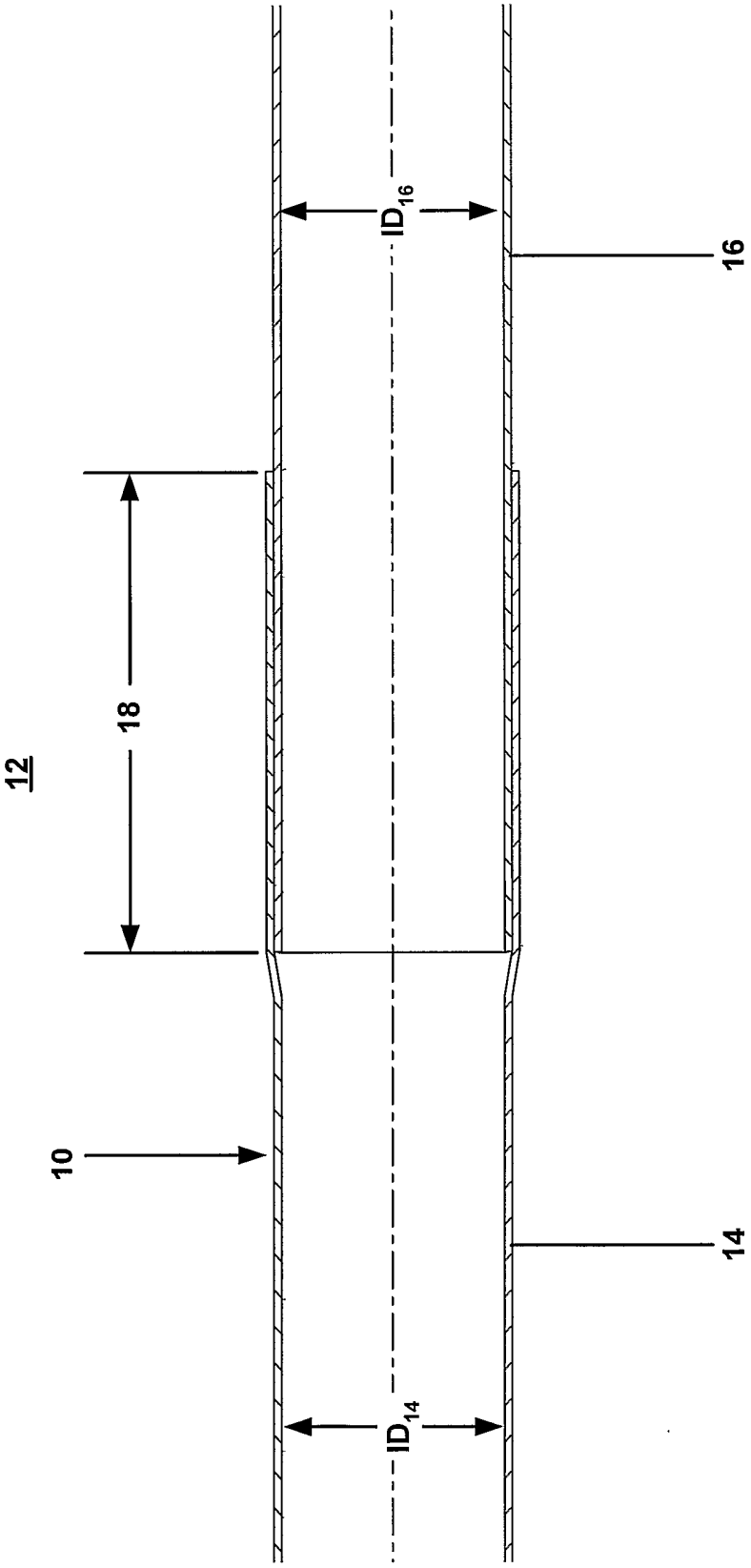

FIG. 6