Nov. 16, 1937. I. E. BUTLER 2,099,195

ELECTRICAL SAFETY SYSTEM

Filed Nov. 30, 1934 3 Sheets-Sheet 1

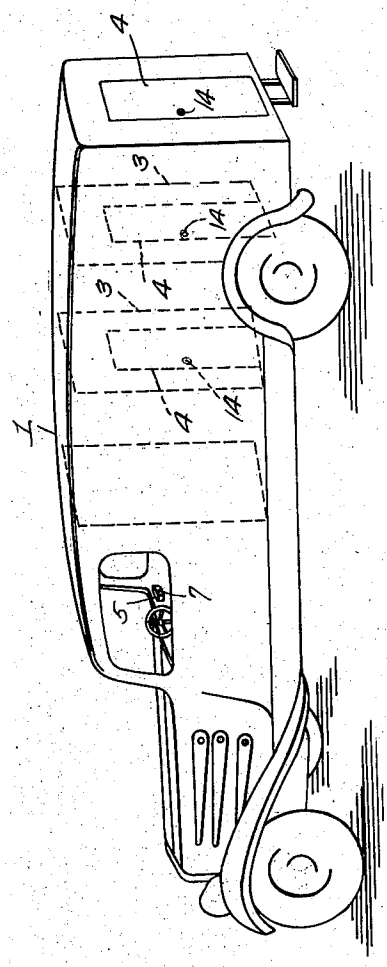


Fig. 1.

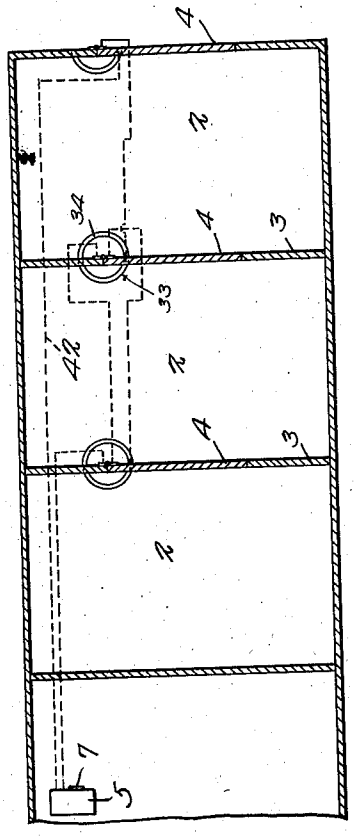


Fig. 2.

Inventor

Irven E. Butler

By J. J. Dowling

Attorney

Nov. 16, 1937. I. E. BUTLER 2,099,195

ELECTRICAL SAFETY SYSTEM

Filed Nov. 30, 1934 3 Sheets-Sheet 2

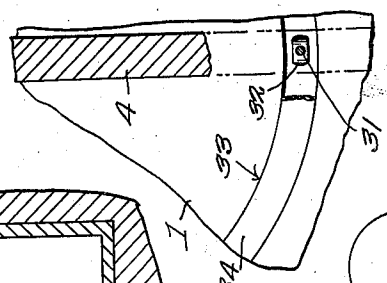

Fig. 6.

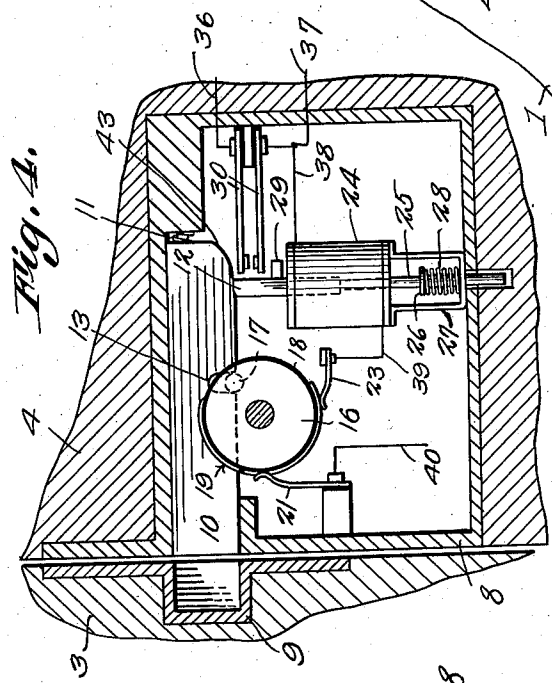

Fig. 4.

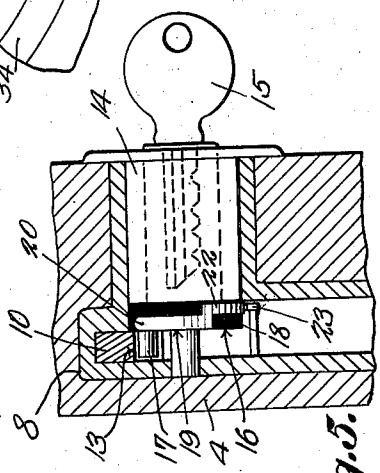

Fig. 5.

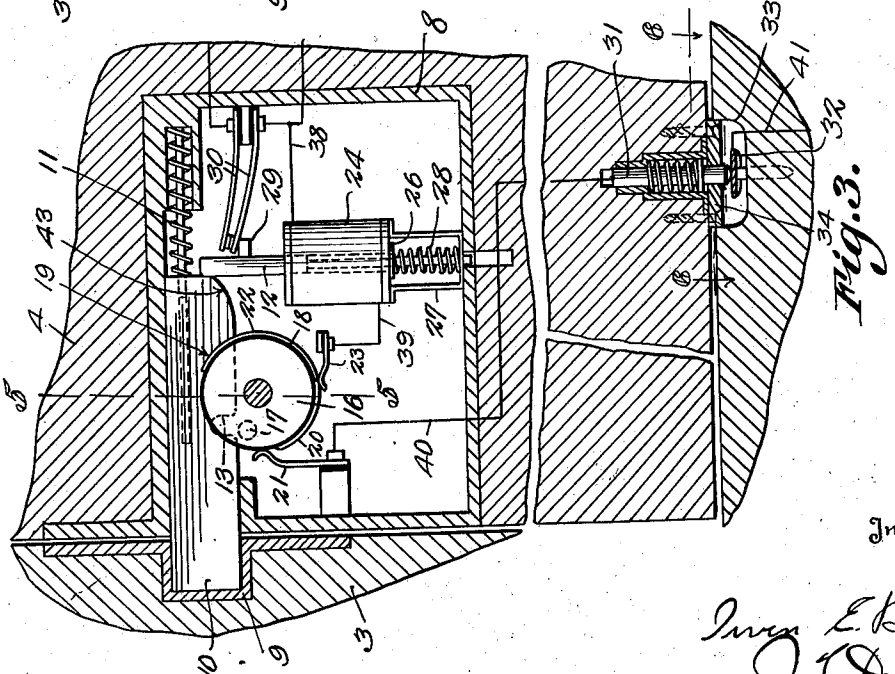

Fig. 3.

Inventor

Irvin E. Butler

By J. J. Dowling

Attorneys

Nov. 16, 1937. I. E. BUTLER 2,099,195

ELECTRICAL SAFETY SYSTEM

Filed Nov. 30, 1934 3 Sheets-Sheet 3

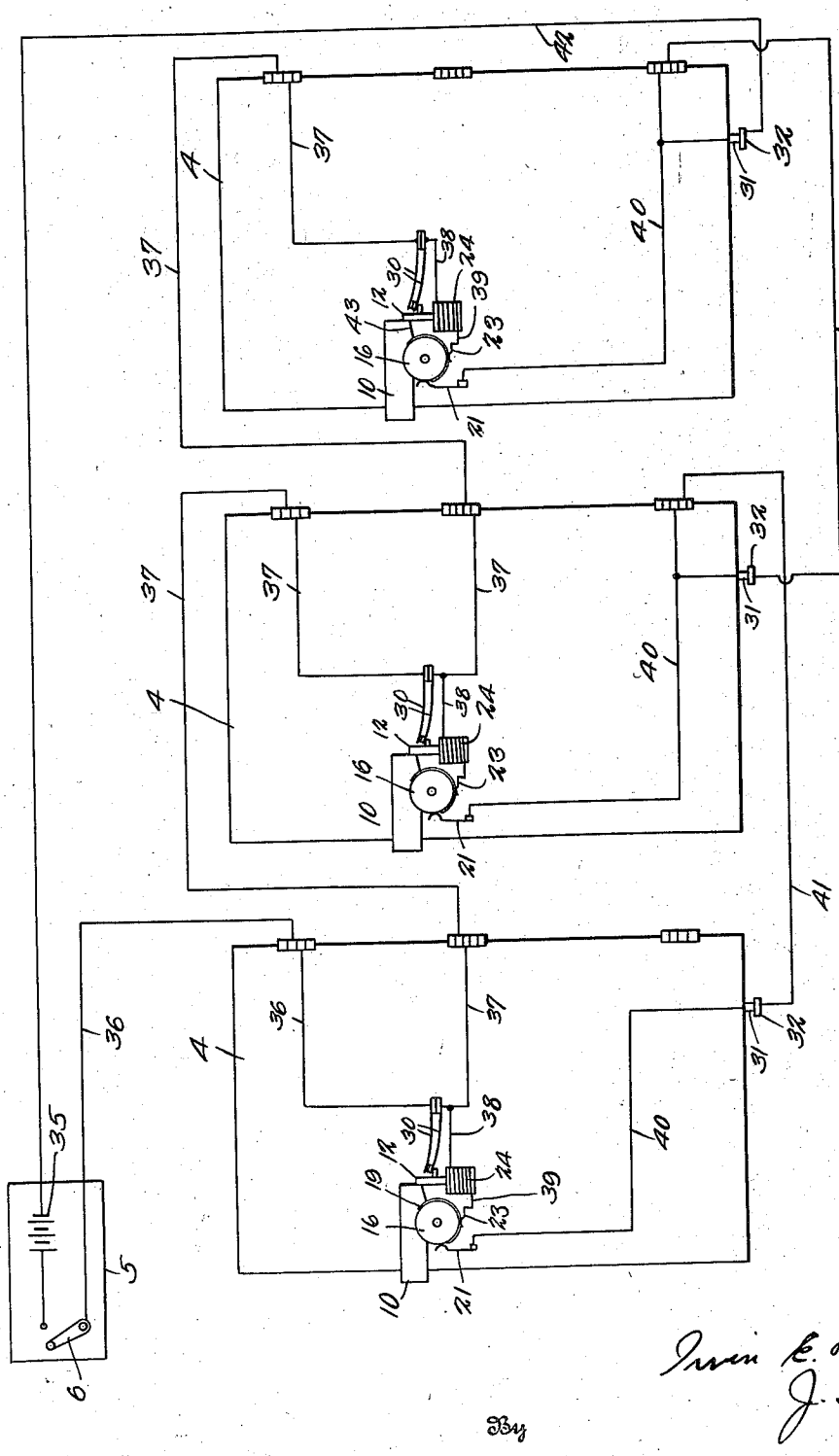


Fig. 7.

Inventor

Irvin E. Butler

By J. T. Dockery

Attorney

Patented Nov. 16, 1937

2,099,195

# UNITED STATES PATENT OFFICE

2,099,195

## ELECTRICAL SAFETY SYSTEM

Irvin E. Butler, Baltimore, Md., assignor of one-half to John C. Fowler, Baltimore, Md.

Application November 30, 1934, Serial No. 755,303

2 Claims. (Cl. 70—265)

This invention relates to certain new and useful improvements in electric safety systems and has for its particular object the provision of a system capable of being easily and quickly installed in any door or lock therefor, on such structures as armored cars, ships, storerooms, safes, vaults, or other places wherein valuables are or may be stored.

A further object of the invention is the provision of a safety system electrically operated and is more particularly adapted for structures such as safes, vaults or the like, that are divided into compartments, the entrance to the compartments being made through doors, each door having a lock, and the door and lock therefor being equipped with a cooperating electric safety system, the operation of said system being such as to render it impossible to open any of the doors unless so desired by a given operator, and further, only one door can be opened selectively and this said door must be closed and locked before any second door can be opened.

Another important feature of the present invention is to provide a series of compartments, each provided with a door, each door equipped with an electrically controlled lock in circuit with an electrically controlled plate and pin carried by the doors and frames therefor, so that no door can be opened at any time if the circuit is open, and further, the invention contains such structure so as to render it possible to open only one door at a time when the circuit is closed, the structure and circuit being such as to render it impossible to open any other door after the first one is opened until the first said door is fully closed and locked.

A further object of the invention is the provision of an electrical safety system embodying a circuit having remote controls for energizing or deenergizing the doors and locks in said circuit, solenoids and contacts in said circuit, whereby said doors and locks are individually and selectively controlled.

With these and other objects in view, the invention consists in certain novel features, combination and arrangement of parts as will be hereinafter more fully described, illustrated in the accompanying drawings, and claimed.

In the drawings,

Figure 1 is a persective view of my improved electrical safety system as constructed in accordance with my invention;

Figure 2 is a sectional plan view, through Figure 1;

Figure 3 is a sectional view taken through a portion of a door and door jamb, depicting one of the locking devices and associated parts in elevation, the same being shown in locked position;

Figure 4 is a view similar to Figure 3, the parts being illustrated in unlocked position;

Figure 5 is a transverse sectional view, on the line 5—5 of Figure 3;

Figure 6 is a plan sectional view, on the line 6—6 of Figure 3; and,

Figure 7 is a diagrammatical showing of the electrical circuit used in this electrical safety device.

Referring to the drawings, the numeral 1 indicates a safety deposit structure, in the present instance illustrated as an armored truck, it being understood, however, that any other structure embodying a safety deposit construction may be used so long as the same embodies a plurality of compartments, each provided with an entrance opening. The entrance opening of each compartment 2 is formed by partitions 3, having doors 4 for entrance to the various rooms or compartments.

To these doors of the compartments I provide an electrical locking system whereby control of all of the locks is located at a point distant from the doors and unless properly operated prevents the opening of any one of the doors. Further, after the master control has been set to permit the unlocking of the doors one door only may be operated at a time. In other words after one door has been opened before any other door may be opened, the first door must be closed and locked, this being clearly illustrated in the several figures of the drawings.

It is to be further understood that the remote or master control can be placed in various remote positions from the safety deposit constructions as a whole, this being done for safety sake, so that the device as a whole can either be put in operation or it can be so set in order that all of the doors may be closed and locked.

As shown in the drawings, the master or remote control 5 is here shown located on the dash of the vehicle and embodies a switch 6, which might be under the control of a lock 7, if so desired.

Since the locking devices of all the doors are identical it is thought that the description of one will suffice for all, and the following is the description.

A casing 8 is provided and is mortised into the door in the usual and well known manner. A bolt keeper 9 is placed in the door jamb, as shown, and is adapted to receive a bolt 10 when the door is in closed position, as illustrated in Figure 3 of the drawings.

A spring 11 normally urges the bolt towards locking position at all times and a dog 12 engages the inner end of the bolt to hold the same in said locked position. The bolt 10 has a transverse notch 13 formed therein, the purpose of which will be hereinafter more fully described.

A tumbler lock 14 under the control of a key

15 is mounted for operation in the lock case. A disc 16 secured to the lock barrel 14 carries a pin 17 thereon, which, upon rotation of the lock barrel, moves into the notch 13 to withdraw the bolt from its keeper 9, as will be clearly apparent from inspection of Figure 4 of the drawings. The periphery of the disc 16 carries a band of insulation 18 attached to which is a segmental contact plate 19, and this plate 19 is offset, as shown in Figure 5 of the drawings, providing a surface 20 for a brush 21 to wipe over, and another surface 22 for a second brush 23 to engage.

Secured within the casing 8 is a solenoid 24 and the core of this solenoid constitutes the dog 12. A rod 25 carries a fixed collar 26, between which and the solenoid 27 there is interposed a spring 28 for lifting the dog 12 to operative, active position.

A projection 29 secured to the dog 12 is adapted to move in a path of a pair of spring contact arms 30 to make contact in a circuit and for the purpose to be hereinafter more fully described when the dog is in locking position, as shown in Figure 3.

Each door carries in its lower edge a spring actuated contact plunger 31, and a contact plate 32 is secured in a circular groove 33 formed in the floor of the compartment and is positioned immediately under the door when in closed position, the plate being less extensive than the thickness of the door so that when the door is opened contact between the pin 31 and the plate 32 will be broken before the door has been opened to any appreciable degree. The circular plate 34 is secured to the door, as indicated in Figure 3, and rides in the groove 33 at all times, so as to prevent tampering with the contacts 31 and 32, either when the door is opened or closed.

Reference will now be had to Figure 7, in which the electrical circuit and its source will be described.

A source of electrical energy, which may be taken from the car battery or any other electrical output unit, is indicated at 35, one side of which is connected to one terminal of the switch 6, a conductor 36 leads from the other side of the switch to the upper spring arm 30 of the first door. For convenience, as shown in the diagram, connections are led from the fixed parts of the structure to the movable parts, or doors, through the hinged members and it is to be understood that other means might be used to accomplish the same results.

The other or lower spring arm 30 is connected to the upper arm of the next pair of spring arms through a connection 37, a branch 38 leads to the coil 24 and another lead 39 from the other end of the coil connects the other end of the coil with the brush 23.

A connector 40 leads from the brush 21 to the contact pin 31, and a conductor 41 leads from the plate 32 to the conductor 40 on the next door, thus leading to the pin 31 on that door.

The same arrangement of connections just described can be carried throughout any number of doors and compartments to the last one of the group where the circuit will be completed by means of a connector 42 leading from the plate 32 at the last door, back to the source of energy 35.

In operation, let it be assumed that the parts are in the position shown in the diagram Figure 7 and in Figure 3. It is evident that operation of the bolt 10 is impossible because of the dog 12. When it is desired to permit operation of the locks, an operator closes the switch 6, which may be located at any given point. It is noted at this point that the circuit is still open by reason of the break in the circuit between the brush 21 and the contact 20. Rotation of the lock barrel 14 and the disc 16 carried thereby, by insertion of a key at any one of the doors will cause the contact 20 to move into engagement with the brush 21 and establish a circuit by way of the conductor 36, arms 30, branches 38 and 39, brush 23, contact 19, brush 21, conductor 40, pin 31, plate 32, conductors 41 and 42, back to the battery 35 and switch 6, thus energizing the solenoid 24 and disengaging the dog 12 from the bolt 10. It will be seen in Figure 3, that the pin 17 is so located with respect to the slot 13 that the hereinbefore described rotation of the disc 16 may be made to close the circuit before the pin engages the slot in the bolt.

As the dog 12 moves downwardly towards its lowermost position the circuit will be broken at the spring arms 30, as shown in Figure 4, but not before a cam shaped surface 43 on the bolt 10 has arrived over the end of the dog, thus further depressing the dog and positively preventing a reclosing of the circuit at this point until the bolt is again permitted to return to its locked position.

With the parts in the position just described, and as shown in Figure 4, the door may be swung open. As this occurs the circuit is again broken by action of the pin 31 leaving the contact plate 32, and any attempt to reestablish a circuit by permitting the bolt 10 to move to its forward position will thereby be frustrated.

It will be evident that with any one of the doors in unlocked or opened position, no other door in the entire system can be opened, and a positive measure of safety is assured due to the fact that the doors must be opened and closed selectively before any other door can be operated, or the system is such that the master switch may be opened and the entire system is inoperative.

Having thus described my invention, what I claim as new is:

1. An electrical safety system for a structure, including a series of compartments, doors for each of said compartments, locks for said doors, contacts and contact plates carried by the doors and the frames therefor of said compartments, an electrical circuit associated with the locks, contacts and plates therefor, remote control for said circuit, means to manually operate said locks of an individual door when said circuit is energized, and further means to deenergize said circuit until said given door is closed and relocked.

2. An electrical safety system including a series of compartments, individual doors for each of said compartments, key operated locks for said doors, contacts and contact plates associated with the doors and frames thereof, an electrical circuit associated with the locks, contacts and plates therefor, remote control for said circuit, means to manually operate said key operated locks of an individual door when said circuit is energized, and further means to deenergize said circuit until said given door is closed and relocked.

IRVIN E. BUTLER.