United States Patent

Hayashi et al.

[15] **3,651,438**

[45] **Mar. 21, 1972**

[54] PULSE GENERATOR

[72] Inventors: **Masayuki Hayashi; Mitsunori Yamane,** Fukuyama, Japan

[73] Assignee: **Mitsubishi Denki Kabushiki Kaisha,** Tokyo, Japan

[22] Filed: **Dec. 24, 1969**

[21] Appl. No.: **887,943**

[30] **Foreign Application Priority Data**

Jan. 6, 1969 Japan.....44/1915

[52] **U.S. Cl.**.....**335/207**

[51] **Int. Cl.**.....**H01h 51/28**

[58] **Field of Search**.....335/205, 206, 207, 139, 140; 307/106; 340/340

[56] **References Cited**

UNITED STATES PATENTS

2,929,896	3/1960	Ronning	335/205
3,233,060	2/1966	Wintriss	335/207 X
3,451,053	6/1969	Xenis et al.	335/205

Primary Examiner—Bernard A. Gilheany
Assistant Examiner—R. N. Envall, Jr.
Attorney—Robert E. Burns and Emmanuel J. Lobato

[57] **ABSTRACT**

The pulse generator disclosed comprises five magnetic reed switches disposed above a rotary magnetic disc and at equal angular intervals on a circle concentric with the disc and four permanent magnet pairs disposed on the disc to selectively face the switches during rotation of the disc such that selected two of the switches are put in their closed position for each of incremental rotations of the disc. In this way 10 different coded outputs are provided.

8 Claims, 7 Drawing Figures

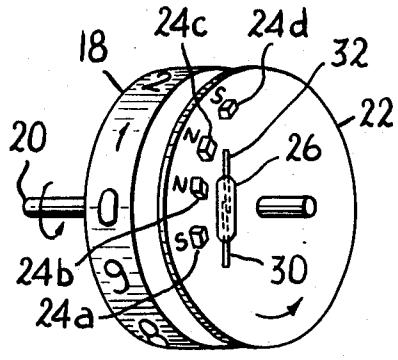

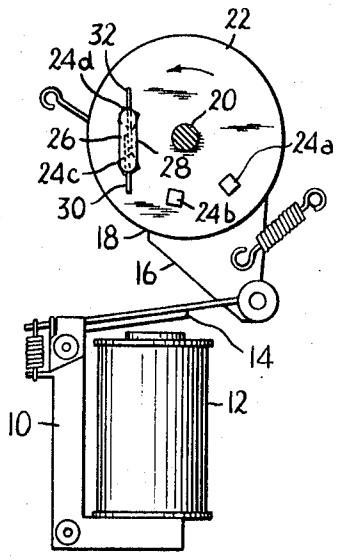

FIG. 1

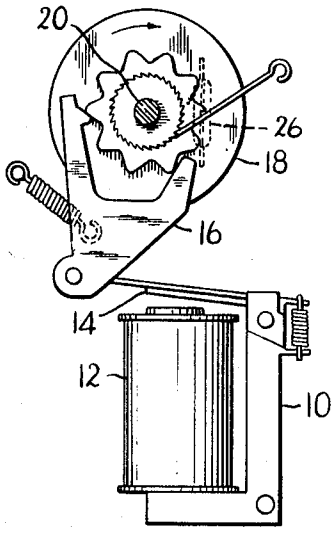

FIG. 2

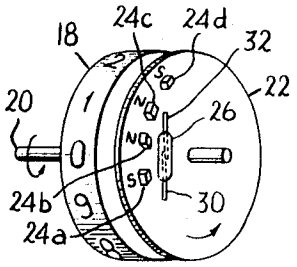

FIG. 3

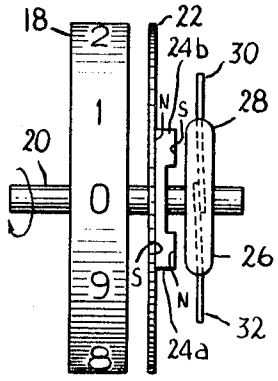

FIG. 4

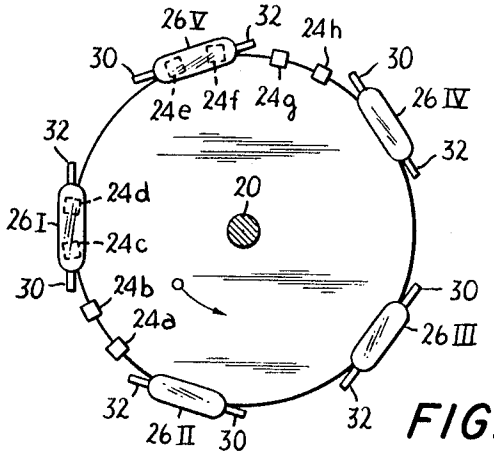

FIG. 5

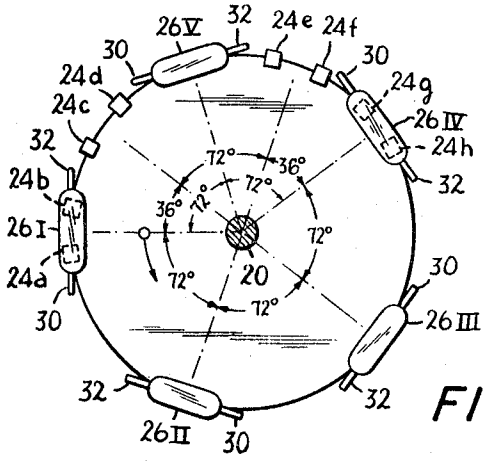

FIG. 6

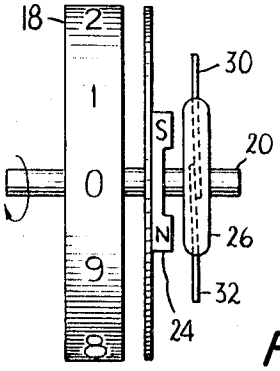

FIG. 7

PULSE GENERATOR

BACKGROUND OF THE INVENTION

This invention relates to improvements in pulse generators suitable for use in readout counters.

If the conventional type of pulse generators using magnetic reed switches is incorporated into readout counters adapted to step for example, 10 times per each complete revolution for the purpose of providing 10 coded outputs then it has been previously required to dispose five magnetic reed switches on a rotary disc at different radial distances from its center and to provide four pairs of permanent magnets for each of the reed switches. That is, the rotary disc has been necessary to have disposed thereon five circular arrays different in diameter from one another and each including four pairs of permanent magnets to successively oppose the associated reed switch during incremental rotational movements of the rotary disc. Thus the magnets total 20 pairs. Each time the rotary disc steps, selected two of the five reed switches are operated and therefore after the disc has stepped 10 times to complete one complete revolution the reed switches each have been operated four times to provide the total of 10 different outputs.

The conventional pulse generators as above outlined have been disadvantageous in that the rotary disc has been necessarily provided with the permanent magnets as many as 20 to increase the weight of the resulting rotator structure leading to a slow response. Further a spacing between each pair of adjacent circular magnet arrays has been required to be wide in order to prevent the permanent magnets in each array from magnetically interferring with those in the adjacent array. Therefore it has been difficult to render the resulting pulse generator small-sized.

SUMMARY OF THE INVENTION

Accordingly it is an object of the invention to provide a new and improved pulse generation device decreased in weight and fast in response by having a plurality of magnetic reed switches disposed in a single circular array and having a minimum number of permanent magnets disposed in a single circular array on a rotary disc to be successively opposed to the reed switches during the rotational movement of the rotary disc.

It is another object of the invention to reduce the magnetic interference between permanent magnets involved.

It is a more special object of the invention to provide a new and improved pulse generation device for use in a readout counter capable of providing 10 different coded outputs with a simple structure using five magnetic reed switches and four permanent magnet pairs.

The invention accomplishes the above cited objects by the provision of a pulse generation device comprising a rotary disc-shaped support responsive to a measured quantity to effect an incremental rotation, and plural pairs of permanent magnets disposed in a circularly arcuate array on the disc-shaped support and substantially equidistant from the center of the disc-shaped support, each of the magnet pairs including the N and S pole faces, characterized by a plurality of magnetic reed switches disposed above the disc-shaped support and in opposite relationship with respect to a path along which the permanent magnets are rotated with the rotational movement of the support.

Preferably, the disc-shaped support may be of a magnetic material and each pair of the permanent magnets may include a pair of permanent magnets having the respective pole faces of opposite polarity fixedly secured to the support and the exposed pole faces capable of facing the reed switches during the rotational movement of the support.

In a preferred embodiment of the invention by which 10 different coded outputs are provided for each complete revolution of the disc-shape support, five magnetic reed switches may be spaced away from each other by angles of substantially 72° above the periphery of the support and four pairs of permanent magnets disposed on the periphery of the support by having the respective pole faces of opposite polarity of each pair fixedly secured to the support and the respective exposed pole faces thereof capable of facing the reed switches, the pairs of permanent magnets being disposed at central angular intervals substantially equal to an angle of 36° except for two inner pairs thereof being disposed at a central angular interval substantially equal to an angle of 72°.

BRIEF DESCRIPTION OF THE DRAWINGS

The invention will become more readily apparent from the following detailed description taken in conjunction with the accompanying drawings in which:

FIG. 1 is a schematic view of a pulse generation device constructed in accordance with the principles of the invention and a driving unit therefor as viewed on the front side;

FIG. 2 is a view similar to FIG. 1 but illustrating the rear side thereof;

FIG. 3 is a perspective view of the pulse generation device shown in FIGS. 1 and 2;

FIG. 4 is a side elevational view of the device as shown in FIG. 3;

FIG. 5 is a plan view of a special form of the invention;

FIG. 6 is a plan view useful in explaining the operation of the device shown in FIG. 5; and

FIG. 7 is a side elevational view of a modification of the invention.

DESCRIPTION OF THE PREFERRED EMBODIMENTS

Referring now to the drawing and FIGS. 1 and 2 in particular, it is seen that an arrangement disclosed herein comprises an electromagnet generally designated by the reference numeral 10 including an electromagnetic coil 12 and a movable iron piece or armature 14. The coil 12 is adapted to be intermittently energized with input pulses dependent upon an electric quantity measured for example by a wattmeter (not shown). The armature 14 is operatively connected to a spring loaded feed claw 16 which is, in turn, operatively coupled to a digit dial 18 in the conventional manner. The digit dial 18 can have disposed on the outer periphery the digit of 0, 1, 2, ... 9 at substantially equal angular intervals in the named order (see FIG. 3). Each time the coil 12 is energized the armature 14 is attracted by the electromagnet 10 to step the digit dial 18 in the direction of the arrow shown in FIG. 1 through the feed claw 16.

The digit dial 18 has fixedly extending through the center thereof a rotary shaft 20 which is, in turn, provided on that portion thereof remote from the feed claw with a disc-shaped support 22 of any suitable magnetic material such as iron for rotation with the digit dial 18. The support 22 is provided on the exposed surface with a plurality of permanent magnets 24 disposed at substantially predetermined angular intervals on a circle having the center lying on the axis of rotation of the same with one pole of each magnet fixedly secured to the exposed support surface. Only for purpose of illustration FIGS. 1 and 3 show four of the permanent magnets 24*a*, *b*, *c* and *d*. As best shown in FIG. 4 the permanent magnet 24*a* has the N pole fixedly secured to the support 28 and the S pole exposed while the magnet 24*b* has the S pole fixedly secured to the support 22 and the N pole exposed whereby both the permanent magnets 24*a* and *b* form one portion of a closed magnetic path through the support 22 as will be described hereinafter. This is true the case of the permanent magnets 24*c* and *d*.

As shown in FIGS. 1, 3 and 4, magnetic reed switches generally designated by the reference numeral 26 are suitably disposed above the exposed surface of the disc-shaped support 22 at substantially equal level and in slightly spaced relationship with respect to the permanent magnets 24 at their positions where they oppose to a path along which the exposed or free pole face of each magnet is moved during the rotational movement of the support 18. As best shown in FIG. 4, the switch 26 includes an enclosed elongated envelope 28 having

a length sufficient to bridge any pair of adjacent permanent magnets **24**, a pair of reed-shaped contact strips **30** and **32** of any suitable resilient, magnetic material such as iron sealed through the opposite ends of the envelope **28** with the inner end portions the strips within the envelope overlapping each other to form a narrow gap therebetween. The contact strips may have preferably their surfaces plated with any suitable conductive material. The contact strips **30** and **32** have the outer ends disposed outside the envelope **28** and adapted to be electrically connected to any suitable external circuit (not shown).

While the single reed switch **26** is illustrated it is to be understood that any desired number of the switches **26** may be used to operatively associated with any desired number of the permanent magnet pairs for the particular application.

As an example, the invention will now be described in conjunction with an arrangement using four pair of permanent magnets and five magnetic reed switches to provide 10 different output corresponding to values of 0, 1, 2, ..., 9 respectively during one complete revolution of the disc-shaped support.

Such an arrangement is illustrated in FIG. **5** and **6** wherein like reference numerals designate the components identical to those shown in FIGS. **1**, **3** and **4**. As shown in FIGS. **5** and **6**, five magnetic reed switches **26**–I, II, III, IV, V are disposed at substantially equal angular intervals, in this case, equal to the angles of 72° on the periphery of the disc-shaped magnetic support **22**, in spaced relationship with respect to the support **22** at the substantially same level and have preferably their centers substantially aligned with the centers of the alternate digits labeled on the peripheral surface of the digit dial **18** as will be ready understood from FIG. **3**. For example, if the reed switch **26**–I center is substantially aligned with the center of the digit "0" the reed switch **26**–V has its center substantially aligned with the center of the digit "2" and so on.

Also four pairs of permanent magnets **24***a*, *b*, *c*, *d*, ..., *h* are fixedly secured at predetermined angular intervals on the disc-shaped support **22** and in predetermined positional relationship with respect to the reed switches **26**. More specifically, as best shown in FIG. **6**, the two pairs of permanent magnets **24***a*, *b* and *c*, *d* are disposed at a central angular interval substantially equal to an angular of 36° on the periphery of the support **22** such that the exposed or free pole faces of the two adjacent magnets can selectively face the reed swiches with the center between those pole faces substantially aligned with the center of that reed switch overlapping them. Further two pairs of permanent magnets **24***e*, *f* and *g*, *h* are similarly disposed at a central angular interval substantially equal to an angle of 36° on the periphery of the support **22** in the same manner as above described. However inner pair of magnets **24***c* and *d* are spaced away from the inner pair of magnets **24***e* and *f* by a central angular interval substantially equal to an angle of 72°. This is, the pairs of permanent magnets are disposed at a central angular intervals substantially equal to angles of 36° except for the two inner pairs of permanent magnets being disposed at a central angular interval substantially equal to an angle of 72°. Thus it will be appreciated that four pairs of permanent magnets **24***a*, *b*, ..., *h*, are secured on the disc-shaped support **22** and on the same circle as the reed switches **26**.

It is, however to be understood that the invention is not restricted to or by the arrangement of FIG. **5**.

The arrangement as above described is operated as follows: It is assumed that during the rotational movement of the support **22** in the direction of the arrow shown in FIGS. **5** and **6** the permanent magnets **24***a* and *b* of opposite polarity have faced the reed-shaped contact strips **30** and **32** of the reed switch **26**–I respectively as shown in FIG. **6**. Under the assumed condition, there is formed a closed magnet path traced from the permanent magnet **24***a* through the S pole face of the magnet **24***a*, the contact strips **30** and **32** of the switch **26**–I, the N and S pole faces of the permanent magnet **24***b* and the support **22** and thence back to the permanent magnet **24***a* through the S pole face thereof. Therefore the inner end portions of the strip are magnetically attracted by each other. That is, the reed switch **26** is put in its closed position.

As the same time the reed switch **26**–IV is put above the magnet pair **16***g* – *h* as shown in FIG. **6** and therefore similarly in its closed position. From FIG. **6** it is seen that none of the remaining reed switches is located above any permanent magnet pair and maintained in their open position. This can be caused to correspond to the digit "0" for example.

A further rotation of the support **22** will cause the permanent magnets **24***b* and *c* of the same polarity to be put directly below the reed switch **26**–I. At that time the N pole faces of the magnets **24***b* and *c* face the contact reeds **30** and **32** of the reed switch **26**–I to exert a magnetic repulsion upon both strips thereby to forcedly separate them from each other even though the remanence due to the previous contacting thereof still retains. Thus the reed switch **26**–I is put in its open position. Also the reed switch **26**–IV is put in its open position because it is magnetically coupled to the magnet **26***h* alone.

After the support **22** has been rotated from its position as shown in FIG. **6** through an angle of 36°, the permanent magnets reach their positions relative to the reed switches as illustrated in FIG. **5**. In FIG. the reed switches **26**–I and **26**–V are located above the respective magnet pairs **26***c* – *d e* – *f* and put in their closed position as will be readily understood from the description made in terms of the magnet pair **26***a* – *b*. However the remaining reed switches are in their open position. This corresponds to the next succeeding digit, in this case, the digit "2."

Each time the support **22** has been rotated through an angle of 36° the process as above described is repeated to put selected two of the five reed switches in their closed position while the remaining switches are maintained in their open position. Thus the succeeding digits are coded by the particular selected two of the five position. As the number of combination of "5" in "2" is of ${}_5C_2$ or 10 the digits 0, 1, ..., 9 can be definitely expressed by selected two of the five reed switches put in their closed position.

From the foregoing description and the illustration of FIGS. **5** and **6** it will be appreciated that each rotation through an angle of 36° of the digit wheel **18** or disc-shaped support **22** causes only the particular two of the five reed switches to be selectively put in their closed position in accordance with the following chart while the remaining switches are maintained in their open position. In the chart, the heading on each column means the particular digit to be indicated, and the reference numerals in the leftmost column designate the reed switches shown at by the same reference numerals in FIGS. **5** and **6**. The particular reed switches put in their closed position as the case may be are labeled "ON." For example, the reed switches **26**–I and **26**–III are put in their closed position for the digit "4."

	0	1	2	3	4	5	6	7	8	9
26–I	ON	ON		ON	ON					
26–II			ON	ON		ON	ON			
26–III					ON	ON		ON	ON	
26–IV	ON						ON	ON		ON
26–V		ON	ON						ON	ON

The above chart is shown only for purpose of illustration and it is to be understood that the invention be not restricted thereto or thereby and that the digits to be indicated may be coded in various manners different from the encoding manner as above described.

If desired, each pair of adjacent permanent magnets including the free pole faces of opposite polarity may be replaced by a single permanent magnet **26** disposed circumferentially of the support **22** as shown in FIG. **7** wherein like reference numerals designate the components corresponding to those shown in FIG. **4**. In that event the support **22** is not required to be formed of a magnetic material.

Also it is to be noted that the invention is equally applicable to various devices other than the readout counters.

What we claimed is:

1. A pulse generating device comprising a rotatable disc-shaped support having opposite end faces, a plurality of pairs of permanent magnets disposed in a circle of selected radius on one said end face of said support, each said pair of magnets having magnetic poles of opposite polarity facing axially away from said support with pole faces disposed in a plane perpendicular to the axis of said support, a plurality of magnetic reed switches, means supporting said reed switches in a single circular array having a radius equal to the radius of said circle of said magnets, said reed switches being disposed in a plane parallel to and slightly spaced axially with respect to the plane of said pole faces in position to be juxtaposed to and actuatable by said magnets, each said reed switch having a length sufficient to bridge the distance between the magnets of a pair, and means for incrementally rotating said disc-shaped support to bring selected magnet pairs opposite selected reed switches and thereby selectively actuate said switches.

2. A pulse generation device as claimed in claim 1 wherein said support is of a magnetic material and each of said permanent magnets include one pole face fixedly secured to said support and the other pole face selectively facing said magnetic reed switches during the rotational movement of said support.

3. A pulse generation device as claimed in claim 1 wherein said each pair of permanent magnets is formed of a single permanent magnet including the N and S pole faces capable of selectively facing said magnetic reed switches.

4. A pulse generating device according to claim 1, wherein the two magnets of each said pair of magnets are equidistant from the axis of said support and said reed switches are elongated and disposed with their lengths tangential to said circle in which said reed switches are arranged.

5. A pulse generating device according to claim 1, wherein each said reed switch comprises an enclosed elongated envelope and a pair of reed-shaped contact strips of resilient magnetic material sealed through opposite ends of said envelope and overlapping within said envelope to form a narrow gap therebetween.

6. A pulse generating device according to claim 5, wherein said contact strips are coated with conductive material.

7. A pulse generating device according to claim 1, wherein five said magnetic reed switches are disposed at approximately equal angular intervals of 72° and four pairs of said permanent magnets are disposed at angular intervals which are approximately integral multiples of 36° whereby two selected magnetic switches are actuated for each of the increments of rotation of said support to provide less different coded outputs for each complete revolution of said support.

8. A pulse generating device according to claim 7, wherein the angular interval between first and second and between third and fourth pairs of said permanent magnets is approximately 36° and the angular interval between said second and third pairs is approximately 72°.

* * * * *