PCT WORLD INTELLECTUAL PROPERTY ORGANIZATION
International Bureau

INTERNATIONAL APPLICATION PUBLISHED UNDER THE PATENT COOPERATION TREATY (PCT)

(51) International Patent Classification 5 :		(11) International Publication Number:
D21C 9/10	A1	WO 94/15018
		(43) International Publication Date: 7 July 1994 (07.07.94)

(21) International Application Number: PCT/US93/12135

(22) International Filing Date: 13 December 1993 (13.12.93)

(30) Priority Data:
07/993,186 18 December 1992 (18.12.92) US

(71) Applicant: INGERSOLL-RAND COMPANY [US/US]; 200 Chestnut Ridge Road, Woodcliff Lake, NJ 07675 (US).

(72) Inventor: LUTHI, Oscar; 51 Browning Avenue, Nashua, NH 03062 (US).

(74) Agents: WATKINS, Mark, A. et al.; Oldham, Oldham & Wilson Co., 1225 West Market Street, Akron, OH 44313-7188 (US).

(81) Designated States: BR, CA, FI, JP, NO, European patent (AT, BE, CH, DE, DK, ES, FR, GB, GR, IE, IT, LU, MC, NL, PT, SE).

Published
With international search report.

(54) Title: METHOD AND APPARATUS FOR REGULATING WOOD PULP BLEACHING

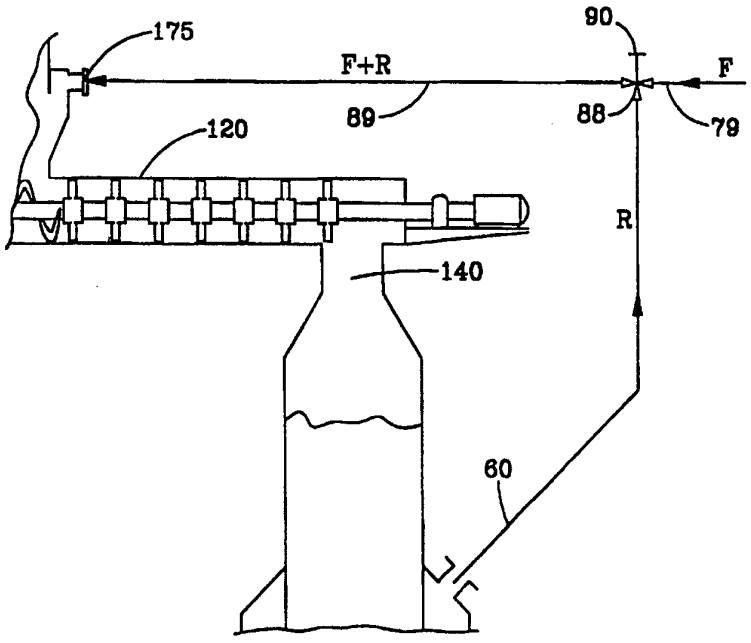

(57) Abstract

A method and apparatus for regulating reaction rate between a gaseous bleaching reagent and wood pulp in a bleaching system, of the type having a mechanically agitated pulp contactor (120), including the steps of co-currently or counter-currently introducing a recirculated contacting gas (R) for diluting freshly supplied reagent gas (F) and for thereby reducing the initial reaction rate between the reagent and pulp. Except for the initial reaction rate, overall bleaching performance is quite insensitive to wide variations in the amount of recirculating gas (R) introduced. This allows adjustment of flow rate to control gas velocity through the contactor (120) for purposes of overall bleaching efficiency. Degradation of pulp fibers due to overbleaching is virtually eliminated, and uniformity of bleaching is greatly enhanced without any sacrifice in production rate.

FOR THE PURPOSES OF INFORMATION ONLY

Codes used to identify States party to the PCT on the front pages of pamphlets publishing international applications under the PCT.

AT	Austria	**GB**	United Kingdom	**MR**	Mauritania
AU	Australia	**GE**	Georgia	**MW**	Malawi
BB	Barbados	**GN**	Guinea	**NE**	Niger
BE	Belgium	**GR**	Greece	**NL**	Netherlands
BF	Burkina Faso	**HU**	Hungary	**NO**	Norway
BG	Bulgaria	**IE**	Ireland	**NZ**	New Zealand
BJ	Benin	**IT**	Italy	**PL**	Poland
BR	Brazil	**JP**	Japan	**PT**	Portugal
BY	Belarus	**KE**	Kenya	**RO**	Romania
CA	Canada	**KG**	Kyrgystan	**RU**	Russian Federation
CF	Central African Republic	**KP**	Democratic People's Republic of Korea	**SD**	Sudan
CG	Congo			**SE**	Sweden
CH	Switzerland	**KR**	Republic of Korea	**SI**	Slovenia
CI	Côte d'Ivoire	**KZ**	Kazakhstan	**SK**	Slovakia
CM	Cameroon	**LI**	Liechtenstein	**SN**	Senegal
CN	China	**LK**	Sri Lanka	**TD**	Chad
CS	Czechoslovakia	**LU**	Luxembourg	**TG**	Togo
CZ	Czech Republic	**LV**	Latvia	**TJ**	Tajikistan
DE	Germany	**MC**	Monaco	**TT**	Trinidad and Tobago
DK	Denmark	**MD**	Republic of Moldova	**UA**	Ukraine
ES	Spain	**MG**	Madagascar	**US**	United States of America
FI	Finland	**ML**	Mali	**UZ**	Uzbekistan
FR	France	**MN**	Mongolia	**VN**	Viet Nam
GA	Gabon				

METHOD AND APPARATUS FOR REGULATING WOOD PULP BLEACHING

BACKGROUND OF THE INVENTION

This invention relates generally to bleaching of wood pulp for paper making and more particularly to bleaching of high consistency wood pulp using a gaseous bleaching reagent.

A typical high consistency pulp bleaching reactor system for use with a gaseous reagent has pulp at 30-45% consistency fed from a dewatering press to be compacted in a screw feeder to form a gas-tight plug. As the leading face of the gas-tight plug leaves the feeder it encounters a high speed fluffer which breaks or shreds the pulp into very small particles and deposits those particles evenly on the surface of a bed type reactor. The gaseous reagent, as part of a contacting gas made up of the gaseous reagent, a carrier gas, and a mixture of reaction products and other gases and vapors, which constitutes the environment within the bleaching system, is fed into the fluffer and passes from there with the pulp particles into the bed type reactor where it reacts with the pulp to substantially complete the bleaching reaction. In some cases, the fluffer is located above the bed type reactor so that the fluffed pulp just falls into the bed; and the contacting gas flows downward through the pulp bed, where the bleaching reagent reacts with the pulp, and is then removed from the reactor and reprocessed to remove impurities and reaction products and to replenish the concentration of gaseous reagent in the contacting gas. After reprocessing and replenishment, the gaseous reagent/contacting gas mixture is again fed into the fluffer to continue the bleaching cycle.

When the fluffer is located next to the bed type reactor, the fluffed pulp must be transported to the top of the reactor for deposit on the pulp bed within the reactor.

This is usually accomplished by blowing with a sufficient volume flow rate of contacting gas mixture to transport the fluffed pulp upward to the top of the reactor. In both cases, the bleaching reaction begins in the fluffer and continues into and through the bed reactor, although, in the first case, there is clearly less reaction time before the pulp fluff is deposited in the bed reactor.

There are also some systems in which the pulp passes from the pulp fluffer into a mixer in which it is agitated to enhance contact between the fluff and the gas mixture. It then is deposited in the bed reactor to substantially complete the reaction. Pulp residence time in the mixer is commonly of the order of 60 seconds, or less. Usually such mixers have an auger, biased paddles, or other mechanical conveying provision to transport the pulp fluff, at substantially the same speed as the gas mixture, through the mixer. The reaction is completed in the bed reactor, as in the preceding cases.

Even though the pulp fluffer divides the pulp into very small particles, each particle still contains a great number of intertwined individual fibers so that access of gaseous reagent to the fibers within each particle is not uniform and outer fibers are more thoroughly bleached than are inner ones. This may result in a salt and pepper effect in the reactor bed and a consequent decrease in bleaching effectiveness. The result is a degradation of pulp quality.

Generally, achievement of uniform bleaching in high consistency pulp using gaseous reagents is very difficult. This is due to the combination of channeling of the gas between pulp particles, the time required for dissolution of the reagent gas in the liquor which surrounds the fibers in the pulp particle, and the relatively slow diffusion of the

dissolved reagent to the centers of the pulp particles. The result may be overbleached outer fibers, weakened outer fibers, and underbleached interior fibers.

Chlorine and chlorine dioxide are the most commonly applied gas for pulp bleaching, but there is increasing interest in ozone as a bleaching reagent. Due to difficulties in obtaining chlorine dioxide which has no free chlorine, environmental considerations have dictated a preference for ozone as a gaseous bleaching reagent to simplify waste treatment and to reduce the potential for objectionable discharges from mills.

Additional background of the pulp bleaching technology is to be found in U.S.Patent Nos. 3,814,664; 3,917,176; and 3,964,962; all commonly assigned and incorporated herein by reference; as well as application serial number 07/953,321, filed September 29, 1992 and also commonly assigned.

In addition to being relatively expensive, gaseous bleaching reagents are very aggressive bleaching agents which have reaction rates which are directly proportional to concentration. This aggravates the non-uniformity of bleaching and increases the severity of pulp damage due to overbleaching. These characteristics, and the difficulties they entail, have delayed widespread application of ozone bleaching in the pulping industry; because reagents which are cheaper and which are less sensitive to operating conditions have been available, even though such reagents have been more difficult to treat and to render unobjectionable in effluent disposal operations.

The foregoing illustrates limitations known to exist in present wood pulp bleaching operations. Thus, it is apparent that it would be advantageous to provide an

alternative directed to overcoming one or more of the limitations set forth above. Accordingly, a suitable alternative is provided including features more fully disclosed hereinafter.

SUMMARY OF THE INVENTION

In one aspect of the present invention, this is accomplished by providing, in a wood pulp bleaching system of the type having a mechanically agitated pulp contactor, a method for regulating a reaction rate between a gaseous bleaching reagent and the pulp, comprising the steps of determining a concentration of gaseous bleaching reagent, for several initial reagent concentrations, as a function of contact time of the gaseous bleaching reagent with the pulp; determining a residence time for the pulp in the contactor at a desired production rate; selecting an initial gaseous reagent concentration which will produce a desired degree of bleaching of the pulp in the determined residence time; taking a portion of contacting gas from a gas outlet of the contactor and mixing the contacting gas with the gaseous bleaching reagent to produce the initial gaseous reagent concentration; and introducing gaseous bleaching reagent, at the initial concentration, into the contactor along with the pulp.

The foregoing and other aspects will become apparent from the following detailed description of the invention when considered in conjunction with the accompanying drawing figures.

BRIEF DESCRIPTION OF THE DRAWING FIGURES

Fig. 1 is a sectional elevation view schematically illustrating one embodiment of a typical high consistency

ozone bleaching reactor of the prior art;

Fig. 2 is a fragmentary sectional elevation view this time illustrating an embodiment of the bleaching apparatus disclosed in co-pending U.S. application number 07/953,321;

Fig. 3 is a fragmentary view, similar to Figs. 1 & 2, in which one embodiment of the present invention is illustrated;

Fig. 4 is a graphic representation of the relationship among ozone concentration, retention time of ozone on pulp fiber, ozone consumption, and degree of dilution of the ozone concentration;

Fig. 5 is another graph, similar to Fig 4, representing the relationship between ozone concentration, dilution rate, retention time, and ozone consumption per pulp unit weight; and

Fig. 6 is another fragmentary sectional elevation view showing an alternative arrangement of the gas handling system of the present invention.

DETAILED DESCRIPTION

To avoid confusion, all detailed description will be conducted with reference to ozone gas even though other gaseous bleaching reagents, such as chlorine monoxide, chlorine dioxide, and others are possible. Moreover, the expression "bleaching gas" will refer to the mixture of ozone in carrier gas (oxygen) plus the other gases and vapors present, at equilibrium, in various sections of the reactor apparatus. This is the same as the "contacting gas" previously described.

Fig. 1 shows a typical high consistency bleaching reactor of the current or prior art. Pulp 25 is supplied at 30% to 45% consistency from a dewatering press 20 and is compacted in a screw feeder 30 to form a gas-tight plug 32.

Plug 32 prevents backward flow of bleaching reagent gas through the screw feeder 30. The leading face of pulp plug 32 enters fluffer 40, at the top of bed reactor 50, where it is fluffed and deposited on pulp bed 52. Ozone inlet 75, through which the ozone bleaching gas is admitted is near the fluffer outlet at the top of the bed reactor. The bleaching gas at inlet 75 is about 6% concentration of ozone in oxygen carrier gas coming out of ozone generator 70. After flowing downward through pulp bed 52 and reacting with the pulp there, the bleaching gas concentration is usually of the order of 0.1% ozone, or less, and the reaction rate is almost zero. The gas exits the bed reactor 50 through oxygen carrier gas return 60 and passes into oxygen cleaner and dryer 65 where vapors and reaction product gases are removed from the oxygen. From oxygen cleaner and dryer 65, the oxygen passes through feed tube 66 to ozone generator 70. Make-up oxygen is supplied through oxygen tube 67 into feed tube 66 to replace any oxygen consumed in the bleaching reaction, consumed in ozone generation, or otherwise lost in circulating through the reactor. Below the dirty carrier gas return 60, the pulp continues downward to where it is diluted to about 4% consistency by adding liquor through dilution inlet 100 and removed from the bed reactor 50 through pulp outlet 110. Because of the very aggressive nature of ozone at a 6% concentration, and because of the short exposure time (about 1 second or less) of the pulp to the bleaching gas between the fluffer and the bed reactor; only about 30 - 50% of the available ozone is consumed before the pulp is deposited on the pulp bed 52.

The reactor of Fig. 2 provides a contactor 120 between the fluffer 40 and bed reactor 50. Up to the point where the pulp enters fluffer 40, the operation is identical to that of the reactor in Fig. 1. However fluffer 40, now located at the inlet of contactor 120, has inlet 175 through

which bleaching gas is admitted from ozone generator 70. The gas recycling is the same as described for Fig. 1 except that the replenished gas is supplied to the fluffer 40 at the inlet of contactor 120. Fluffed pulp particles fall into contactor feed chamber 45 below which is auger 125 to transport the pulp into and through mixer 120. Even without any other driving force, the auger 125 would keep the pulp moving. Paddles 135 are intended for agitating the pulp to improve uniformity of exposure of the pulp to the bleaching gas. The paddles 135 also may have a bias so they drive the pulp forward in contactor 120 toward discharge 140 where it falls onto pulp bed 52 in bed reactor 50. This bed reactor has no bleaching gas inlet except through discharge 140, contactor 120, feed chamber 45, and fluffer 40 as fed by inlet 175. A great deal of the ozone present reacts before the pulp enters the bed reactor 50. Since the ozone concentration in the bleaching gas is reduced, the reaction speed is decreased, and there is more time for dissolution and diffusion of ozone to occur. The bleaching reaction is, therefore, more uniform. Although this represents an improvement, it does not completely eliminate non-uniformity of color and fiber damage due to excessive bleaching.

Fig. 3, in conjunction with Figs. 4 & 5, illustrates an embodiment of the invention in which the operation is identical up to the point where the pulp enters fluffer 40. In this case, however, fluffer 40 receives a mixture of fresh bleaching gas (which may come from a dryer/cleaner and generator, or it may be supplied from cylinders or some other source as determined by economics), together with a quantity of untreated contacting gas taken from the gas outlet of the contactor 120, through gas inlet 175. Note that this embodiment does not necessarily include a bed type reactor as do those embodiments described earlier, and thus,

none is shown in Fig. 3. If one were desired, it would be incorporated substantially as described.

Fluffer 40 and contactor 120 operate as described above. Here, however, recirculating gas R (untreated contacting gas), is fed through pipe 88 from gas outlet 87 and is mixed with fresh gas F in pipe 79 in proportioning valve 90. (Fresh gas F has typically passed through cleaner/dryer 65 and ozone generator 70 or has been supplied from some other source.) The gas mixture F + R travels through pipe 89 and enters fluffer 40 through gas inlet 175. Proportioning valve 90 regulates the relative amounts of recirculating gas R and fresh gas F in the mixture going to fluffer 40, thereby controlling the total volume and initial concentration of gaseous bleaching reagent acting upon the pulp in the system.

Ozone generator 70 is operated to produce the amount of fresh gas F (For example, 6% ozone in oxygen carrier gas) required for bleaching the pulp at the desired pulp feed rate.

Recirculating gas R dilutes the fresh gas F and reduces the bleaching reaction rate, thereby mitigating the degree of non-uniformity of the bleaching reaction in contactor 120. This is better illustrated by reference to Fig 4, in which the relationship between ozone concentration, recirculation rate, and pulp residence time in contactor 120 is qualitatively illustrated for recirculation rates of 0, 1, 4, and 10 times the flow rate of the fresh gas. It is clear that recirculation flow rates up to 10 times the flow rate of fresh gas produce remarkably little change in ozone consumption in contactor 120, but they do reduce reaction rates significantly during the first few seconds of exposure

of the pulp to the gas and thereby significantly reduce the danger of overbleaching otherwise experienced.

More than 50% of the initial ozone concentration, as seen in Fig. 4, is consumed during the first part of the reaction with a recirculation rate of 0, while a recirculation rate of 4 times the flow rate of fresh gas yields a consumption of about half of that quantity in the same time period. After a short time, the rate of change of ozone concentration is virtually identical regardless of recirculation rate.

This behavior is even more clearly seen in Fig. 5, in which the ozone transfer rate is plotted as a function of residence time for recirculation rates of 0, 1, 4, and 10 times the fresh gas flow rate. In this case, the rate of change of the ozone transfer rate is virtually identical for all recirculation ratios after even less time than described for Fig. 4.

The result of the behavior seen in Figs. 4 & 5 is that, since the initial reaction rates are slower with higher proportions of recirculation gas added to the fresh gas, pulp degradation due to overbleaching is significantly reduced; because the ozone has time to diffuse into the interior portion of the fibers and flocs to react with the lignin there. Since ozone concentration and consumption rate decrease only slightly from beginning to end of the residence of the pulp in contactor 120 at high recirculation rates, gas channeling is a less important cause of non-uniform bleaching than it is without such recirculation. If bleaching efficiency is defined as brightness increase or kappa number reduction per unit of applied ozone, bleaching efficiency is higher at lower ozone concentrations. Recirculation also provides multiple pass reaction

opportunities for unreacted ozone in the contacting gas. Of course, these benefits are more pronounced at higher temperatures because reaction rates are higher at elevated temperatures. It should be noted that counter-current or co-current flow is contemplated for this application. The determination depends on pulp characteristics and on mill operating constraints.

In addition to the above-mentioned benefits, gas recirculation permits adjustment of the total gas flow rate without changing the amount of ozone entering the reactor. This allows variation of total gas flow to adjust contact time of pulp with gas through contactor 120 without deviating from the ozone quantity required by the bleaching reaction stoichiometry.

Fig. 6 shows another arrangement of the system in which a fluffer/blower 240 is mounted apart from the contactor 120 and in which recirculation to fluffer/blower 240 can be adjusted independently of the recirculation through the contactor. Fluffer/blower 240 feeds fluffed pulp to cyclone 140 above the inlet of contactor 120 by blown gas transport. The blowing gas is made up of fresh gas from the cleaner/dryer 65 and ozone generator 70, recirculating gas taken from gas outlet 87 of contactor 120, and additional recirculating gas taken from port 187 of cyclone 140. Recirculation from cyclone 140 permits supply of adequate blowing gas for operation of the fluffer/blower independently of requirements of the contactor operation.

This invention may also be applied in conjunction with bed type reactors as shown in Figs. 1 & 2, but it is preferable to complete the bleaching reaction in the agitated contactor in which the highest degree of uniformity of bleaching is attained. In combination with the above, it

improves performance of pulp bleaching systems by providing adjustability of bleaching gas flow and concentration without sacrifice of efficiency. The required amount of ozone is supplied for the pulp production rate, but its concentration is decreased to reduce the initial reaction rate with the pulp. Pulp degradation due to overbleaching is greatly reduced and bleaching uniformity is improved without any decrease of production rate. Gas flow is thus adjustable for purposes of concentration adjustment.

Depending upon pulp characteristics and operating constraints, the bleaching contacting gas may flow co-currently or counter-currently through the contactor with the pulp. Of course a counter-current reagent flaw can retard flow of the pulp to a greater or lesser degree, depending on the volumetric flow rate of the gas and the size of the contactor chamber.

What is claimed is:

1. In a wood pulp bleaching system of the type having a mechanically agitated pulp contactor, a method for regulating a reaction rate between a gaseous bleaching reagent and said pulp, comprising the steps of:

determining a concentration of gaseous bleaching reagent, for several initial reagent concentrations, as a function of contact time of said gaseous bleaching reagent with said pulp;

determining a residence time for said pulp in said contactor at a desired production rate;

selecting an initial gaseous reagent concentration which will produce a desired degree of bleaching of the pulp in the determined residence time;

taking a portion of contacting gas from a gas outlet of said contactor and mixing said contacting gas with said gaseous bleaching reagent to produce said initial gaseous reagent concentration; and

introducing gaseous bleaching reagent, at said initial concentration, into said contactor along with said pulp.

2. The method of claim 1, wherein the portion of contacting gas mixed with said gaseous bleaching reagent is sufficiently large that it yields an initial gaseous reagent concentration less than 75% of the concentration of undiluted gaseous bleaching reagent.

3. The method of claim 1, wherein said gaseous bleaching reagent and said recirculating contacting gas travel co-currently with said pulp through said contactor.

4. The method of claim 1, wherein said gaseous bleaching reagent and said recirculating contacting gas travel counter-currently to said pulp through said contactor.

5. In a wood pulp bleaching apparatus of a type in which fluffed pulp passes through a mechanically agitated contactor, the improvement, in combination with said mechanically agitated contactor, comprising:

means for regulating initial concentration of gaseous bleaching reagent in contact with said wood pulp; and

means for controlling flow rate and contact time of said gaseous bleaching reagent with said wood pulp in said pulp fluffer and said contactor.

6. The improvement of claim 5, wherein the means for regulating initial concentration of gaseous bleaching reagent in contact with said wood pulp comprises means for recirculating a contacting gas from a gas outlet of said contactor for missing with freshly supplied gaseous reagent fed in said pulp fluffer.

7. The improvement of claim 5, wherein the means for controlling flow rate and contact time of said gaseous bleaching reagent with said wood pulp in said pulp fluffer and said contactor comprises valve means for regulating quantity of freshly supplied gaseous reagent admitted to the pulp fluffer and for admitting a sufficient quantity of contacting gas being recirculated from said gas outlet of said contactor to produce a desired concentration of gaseous reagent in a sufficiently large total gas volume to provide a desired gas flow velocity through said fluffer and said contactor.

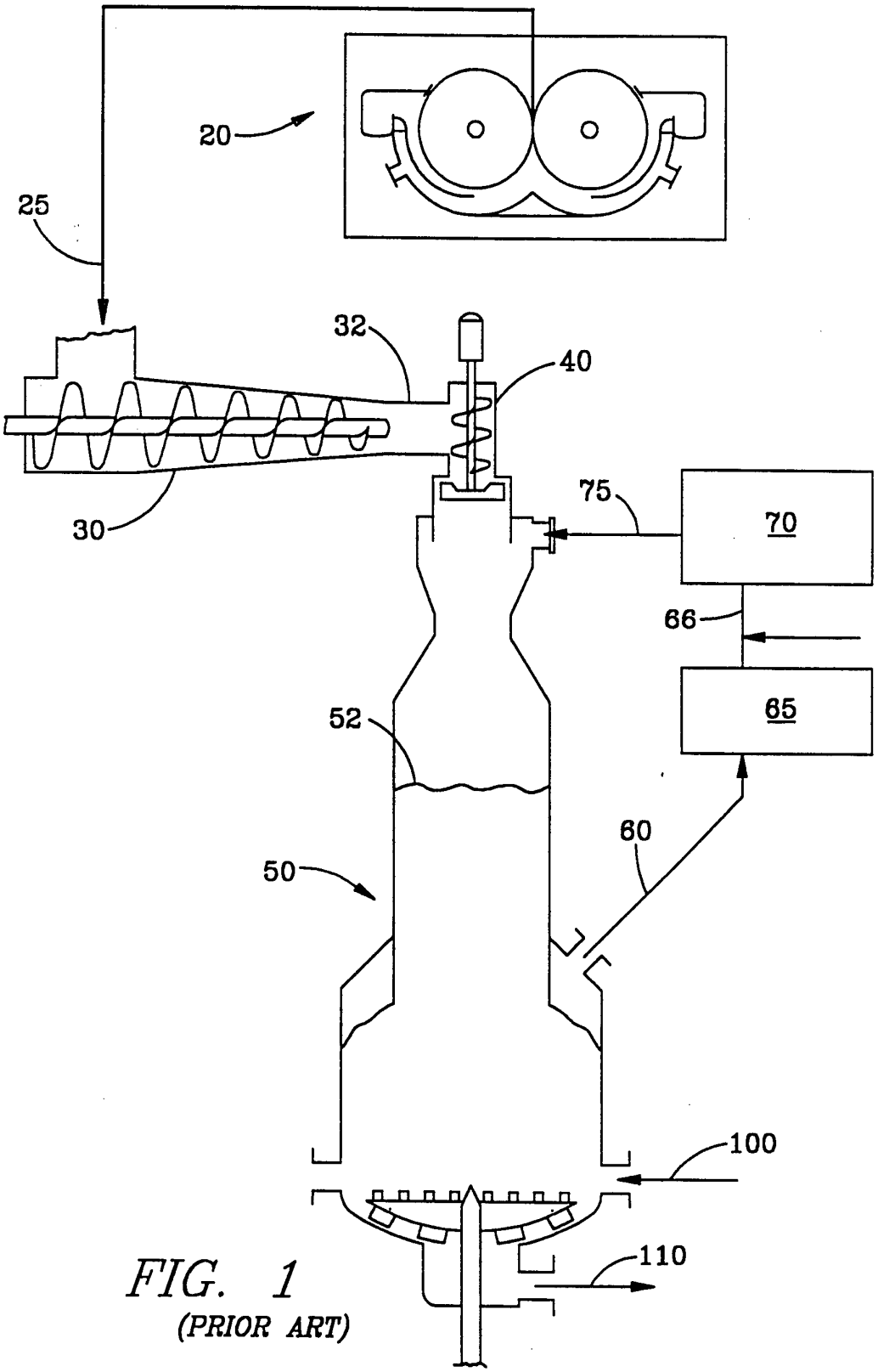

FIG. 1
(PRIOR ART)

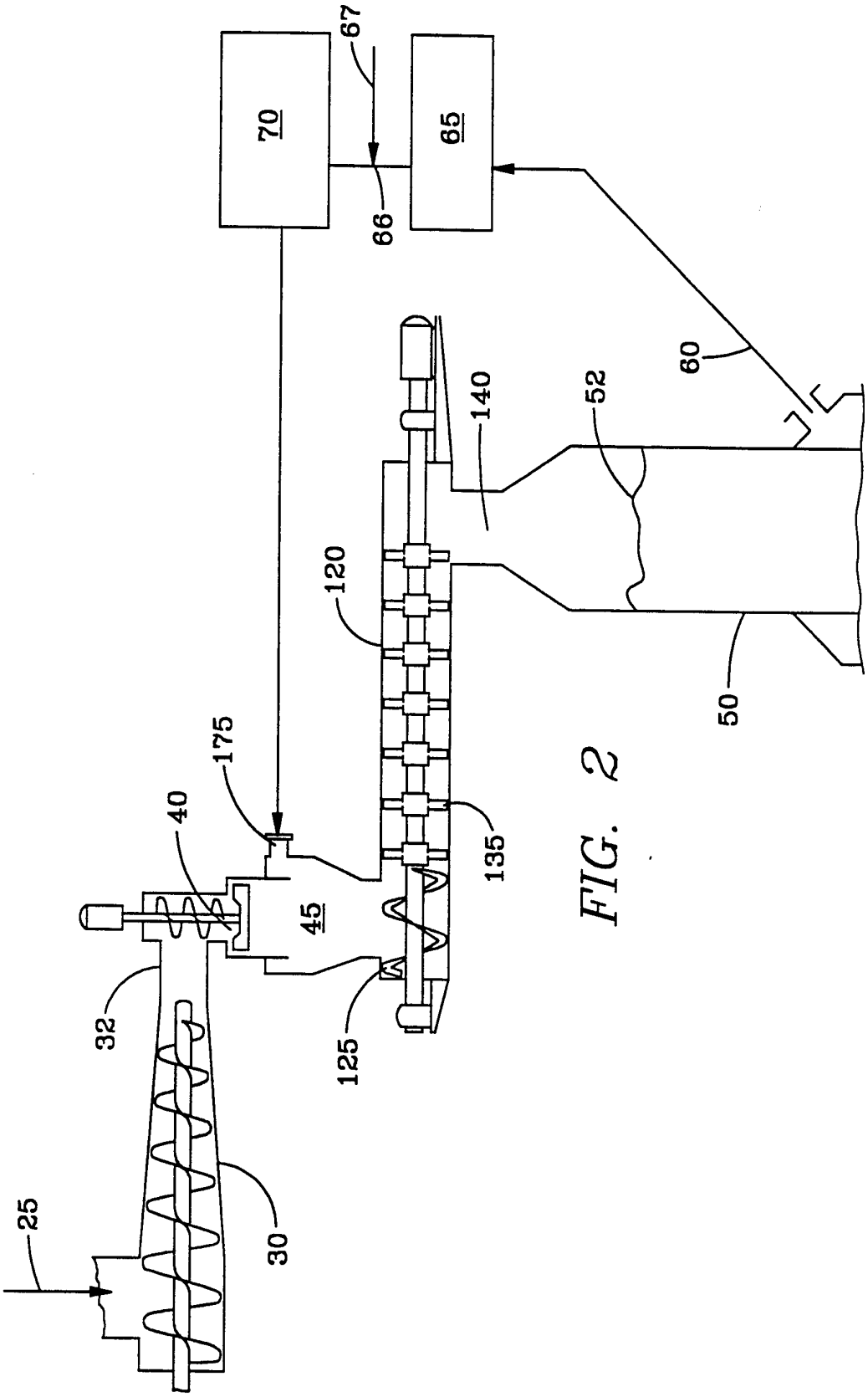

FIG. 2

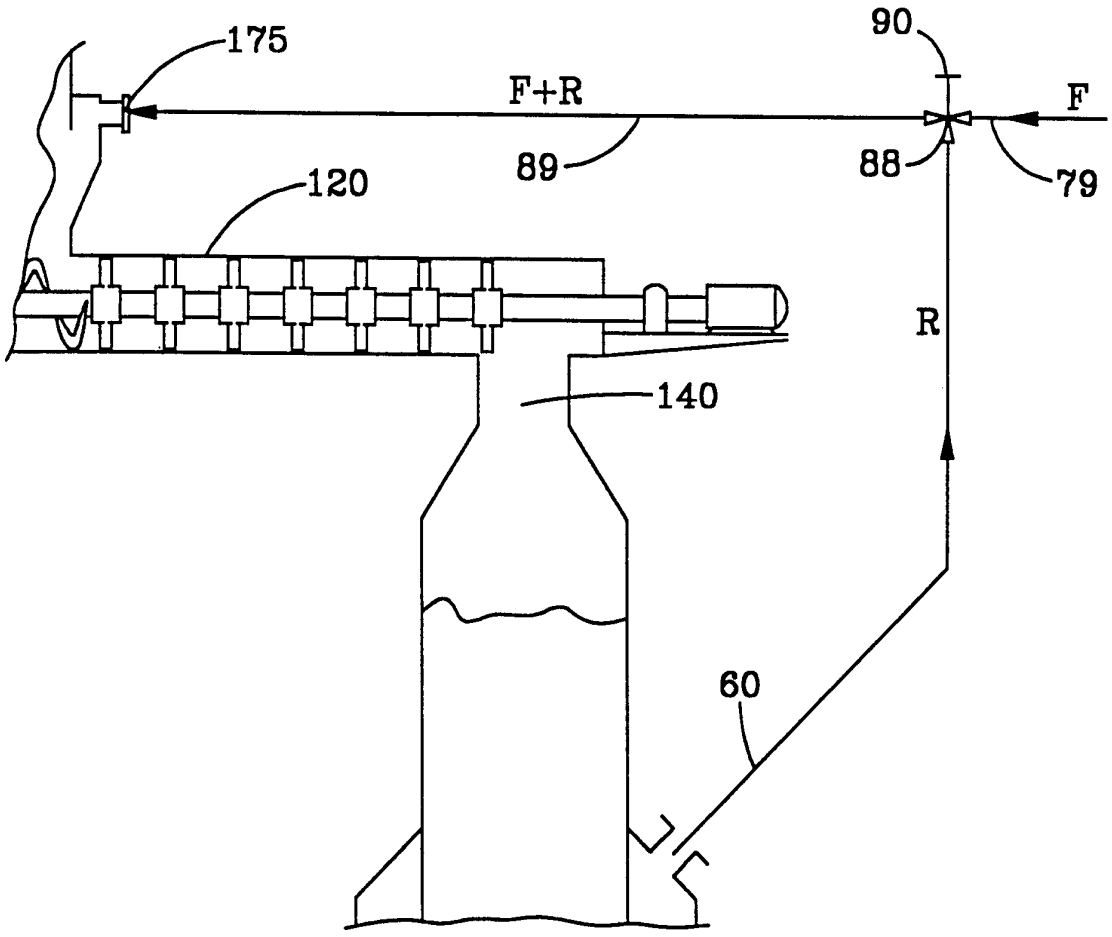

FIG. 3

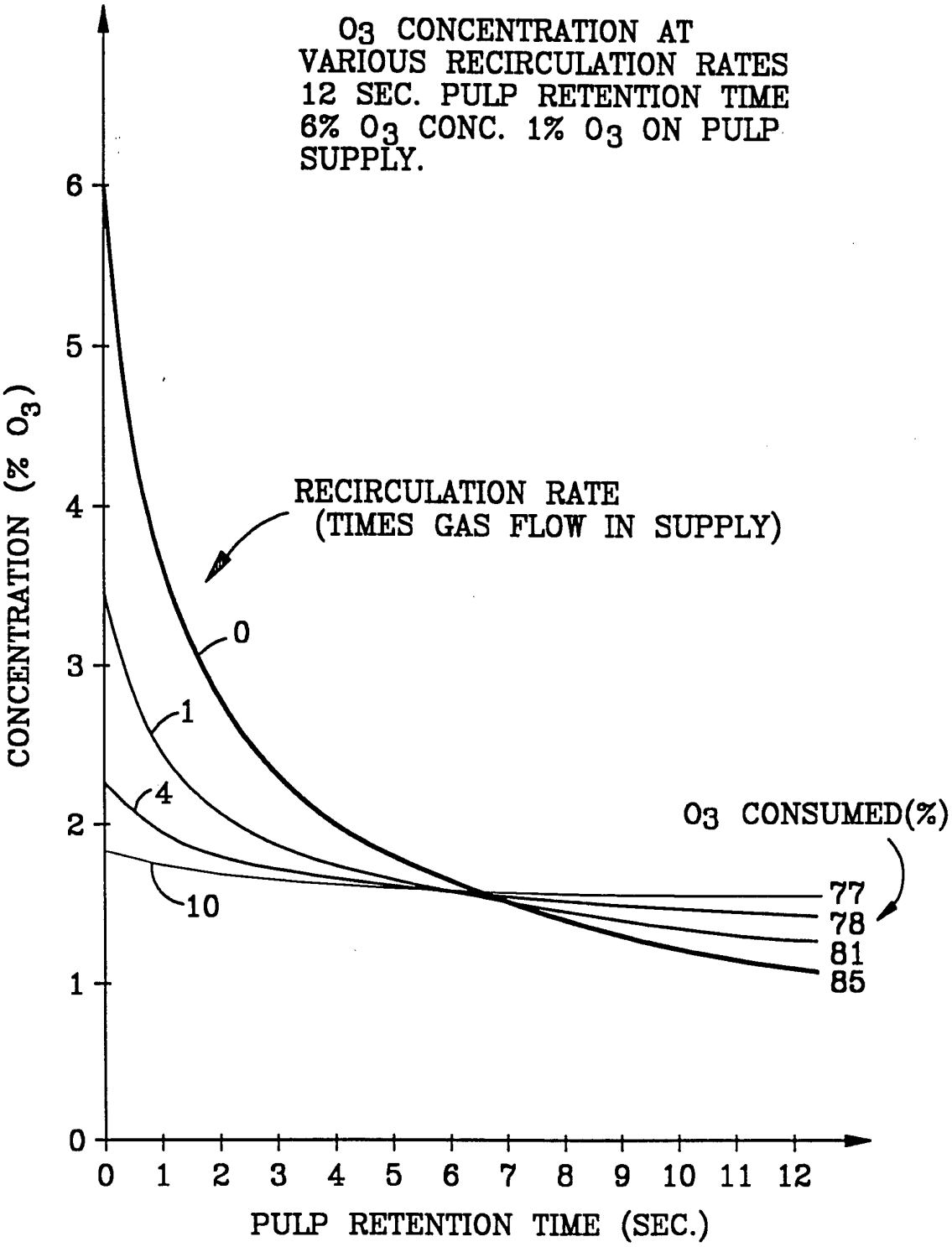
O3 CONCENTRATION AT
VARIOUS RECIRCULATION RATES
12 SEC. PULP RETENTION TIME
6% O3 CONC. 1% O3 ON PULP
SUPPLY.
RECIRCULATION RATE
(TIMES GAS FLOW IN SUPPLY)
0
1
4
10
O3 CONSUMED(%)
77
78
81
85
CONCENTRATION (% O3)
PULP RETENTION TIME (SEC.)
0 1 2 3 4 5 6
0 1 2 3 4 5 6 7 8 9 10 11 12

FIG. 4

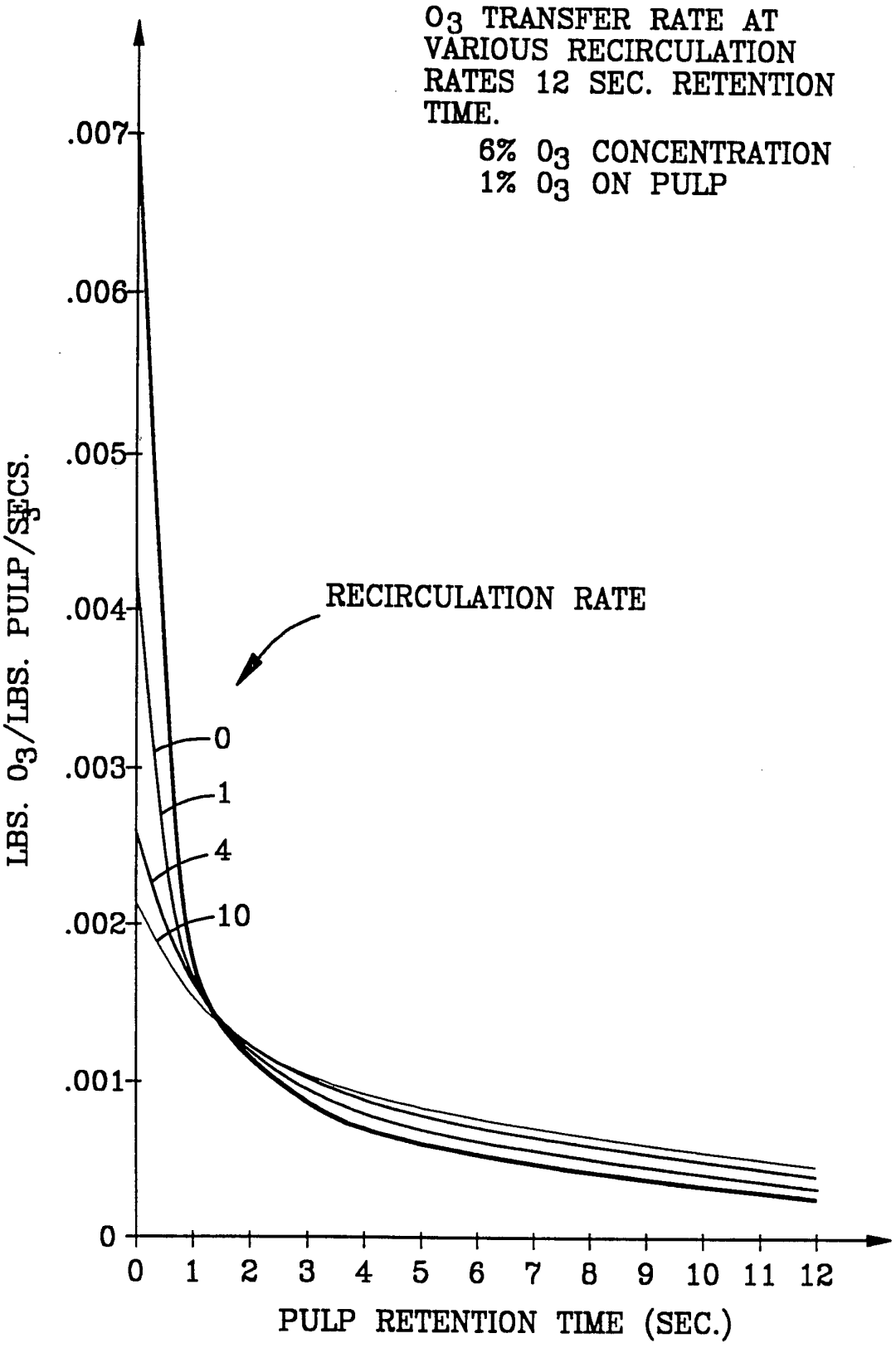
O_3 TRANSFER RATE AT VARIOUS RECIRCULATION RATES 12 SEC. RETENTION TIME.
6% O_3 CONCENTRATION
1% O_3 ON PULP
RECIRCULATION RATE
0
1
4
10
LBS. O_3/LBS. PULP/SECS.
.007
.006
.005
.004
.003
.002
.001
0
0 1 2 3 4 5 6 7 8 9 10 11 12
PULP RETENTION TIME (SEC.)

FIG. 5

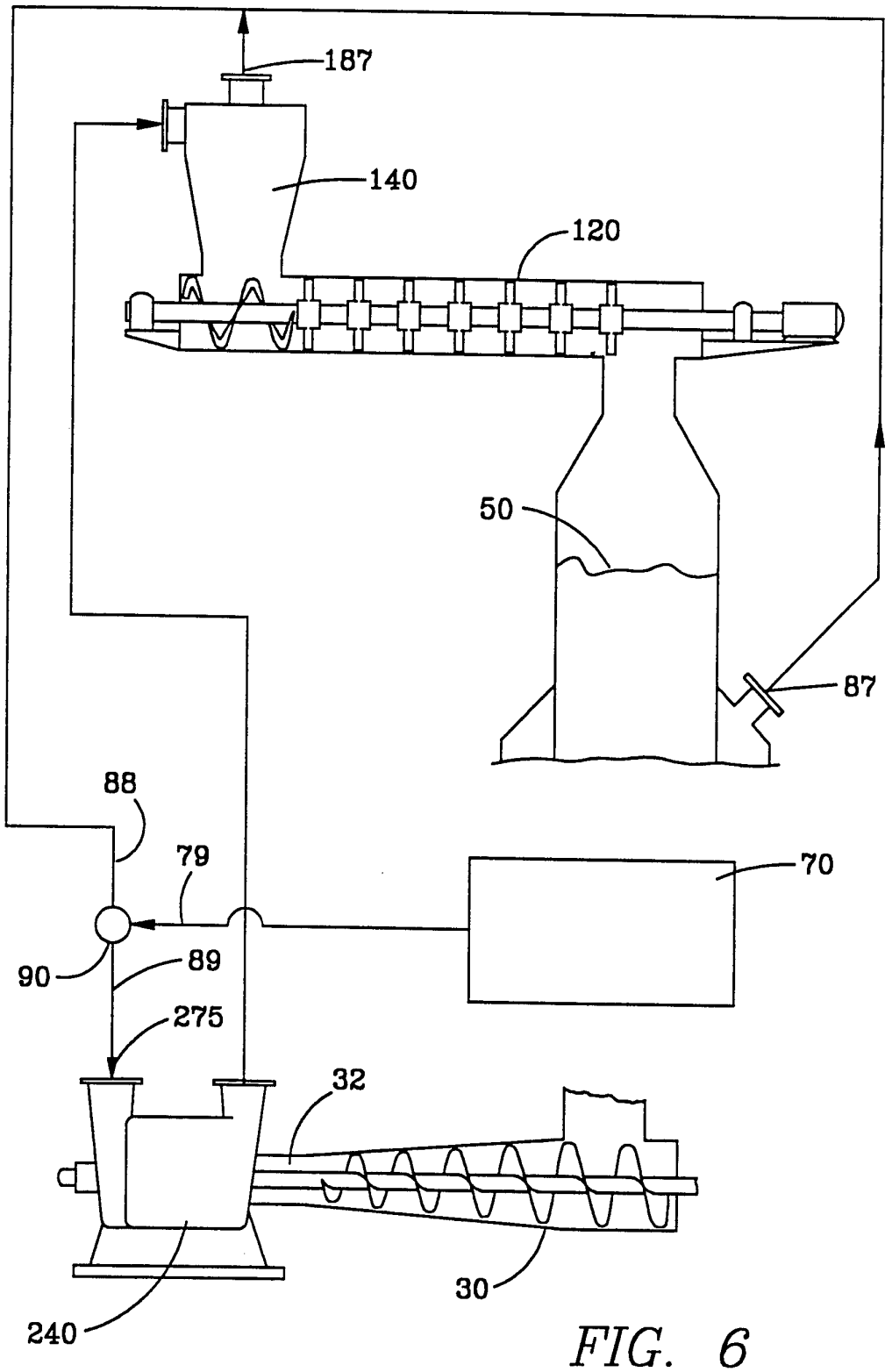

FIG. 6

INTERNATIONAL SEARCH REPORT

I. national application No.
PCT/US93/12135

A. CLASSIFICATION OF SUBJECT MATTER

IPC(5) :D21C 9/10
US CL :162/41, 63, 237
According to International Patent Classification (IPC) or to both national classification and IPC

B. FIELDS SEARCHED

Minimum documentation searched (classification system followed by classification symbols)

U.S. : 162/41, 63, 237, 57, 62, 64, 65, 66, 67, 42, 45, 236, 243, 248, 17, 19

Documentation searched other than minimum documentation to the extent that such documents are included in the fields searched

Electronic data base consulted during the international search (name of data base and, where practicable, search terms used)

C. DOCUMENTS CONSIDERED TO BE RELEVANT

Category*	Citation of document, with indication, where appropriate, of the relevant passages	Relevant to claim No.
X,P	US, A, 5,188,708 (Griggs et al) 23 February 1993 (23.02.93), column 16, line 14 to column 20, line 11.	1-7
X,P	US, A, 5,174,861 (White et al) 29 December 1992 (29.12.92), column 3, lines 42 to 53, column 6, line 43 to column 7, line 11, column 18, lines 26 to 50.	1-7
Y	US, A, 3,964,962 (Carlsmith) 22 June 1976 (22.06.76), column 4, lines 1 to 17.	1-7
Y	US, A, 4,581,104 (Luthi) 08 April 1986 (08.04.86), column 8, lines 1 to 35.	1-7

☐ Further documents are listed in the continuation of Box C. ☐ See patent family annex.

*	Special categories of cited documents:	"T"	later document published after the international filing date or priority date and not in conflict with the application but cited to understand the principle or theory underlying the invention
"A"	document defining the general state of the art which is not considered to be part of particular relevance	"X"	document of particular relevance; the claimed invention cannot be considered novel or cannot be considered to involve an inventive step when the document is taken alone
"E"	earlier document published on or after the international filing date	"Y"	document of particular relevance; the claimed invention cannot be considered to involve an inventive step when the document is combined with one or more other such documents, such combination being obvious to a person skilled in the art
"L"	document which may throw doubts on priority claim(s) or which is cited to establish the publication date of another citation or other special reason (as specified)	"&"	document member of the same patent family
"O"	document referring to an oral disclosure, use, exhibition or other means		
"P"	document published prior to the international filing date but later than the priority date claimed		

Date of the actual completion of the international search 15 FEBRUARY 1994	Date of mailing of the international search report FEB 28 1994
Name and mailing address of the ISA/US Commissioner of Patents and Trademarks Box PCT Washington, D.C. 20231 Facsimile No. (703) 305-3230	Authorized officer Debbie Will GEOFFREY L. KNABLE Telephone No. (703) 308-2062

Form PCT/ISA/210 (second sheet)(July 1992)★