W. D. CARTER.

CENTRIFUGAL PUMP.

APPLICATION FILED APR. 7, 1914.

1,118,739.

Patented Nov. 24, 1914.

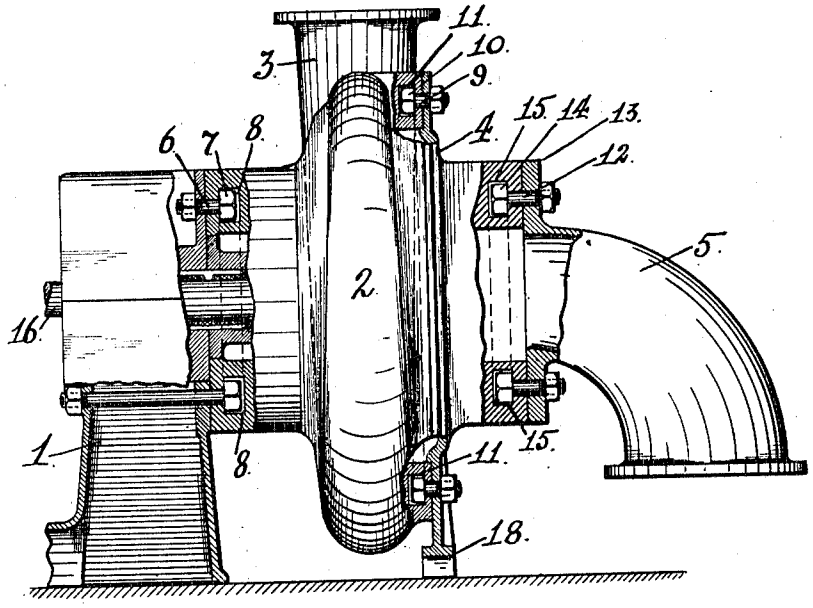


Fig. 1.

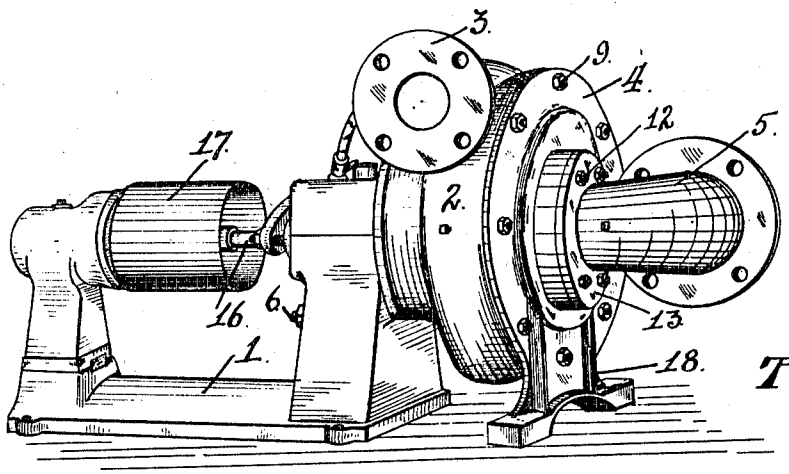


Fig. 2.

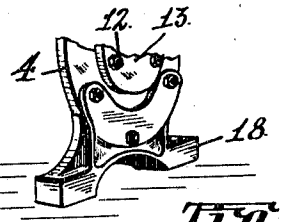


Fig. 3.

WITNESSES:

Albert R. Sommer

S. Constine.

INVENTOR.

William Douglas Carter

BY

Wm. F. Booth

ATTORNEY.

# UNITED STATES PATENT OFFICE.

WILLIAM DOUGLAS CARTER, OF SAN JOSE, CALIFORNIA, ASSIGNOR TO BEAN SPRAY PUMP CO., OF SAN JOSE, CALIFORNIA, A CORPORATION OF CALIFORNIA.

## CENTRIFUGAL PUMP.

1,118,739. Specification of Letters Patent. Patented Nov. 24, 1914.

Application filed April 7, 1914. Serial No. 830,158.

*To all whom it may concern:*

Be it known that I, WILLIAM DOUGLAS CARTER, a citizen of the United States, residing at San Jose, in the county of Santa Clara and State of California, have invented certain new and useful Improvements in Centrifugal Pumps, of which the following is a specification.

My invention relates to the class of centrifugal-pumps, particularly to those of the horizontal type.

The object of my invention is to provide for supporting and steadying the pump on the suction side of its casing, under all conditions of the angular adjustment of the discharge and of the suction of said pump.

To this end my invention consists in the novel construction and combination of parts which I shall now fully describe by reference to the accompanying drawings, in which—

Figure 1 is an elevation, partly broken, of my pump, showing the position of the suction and discharge as said pump is normally shipped out. Fig. 2 is a perspective view of the pump, showing both suction and discharge turned to an angle different from that shown in Fig. 1. Fig. 3 is a fragmentary view showing the steadying foot as a separate piece from the cap-plate of the casing and bolted thereto, instead of being made integral therewith as it appears in Figs. 1 and 2.

1 is a base having a pedestal. 2 is the pump casing supported by said pedestal, and having a peripheral discharge 3. 4 is the cap-plate of the casing and 5 is the suction elbow. The assemblage of these parts is as follows: The pump casing is carried by the base pedestal and is rotatively adjustable relatively thereto. The connection here shown is formed by the bolts 6, the heads 7 of which are fitted in an annular groove 8 in the casing. The cap-plate is rotatively adjustable with respect to the casing, said connection being formed by the bolts 9, the heads 10 of which are fitted in an annular groove 11 in the casing. The suction-elbow is also rotatively adjustable with relation to the cap-plate, this being possible by reason of the bolts 12 in the flange 13 of the elbow, the heads 14 of the bolts being fitted in an annular groove 15 in the cap-plate.

16 indicates the drive shaft of the pump impeller, and 17 is the drive-shaft pulley.

18 is a supporting foot, with which the cap-plate 4 is formed or provided. In Figs. 1 and 2 it is shown integral with the cap-plate. In Fig. 3 it is shown as a separate piece bolted to said plate. This foot always rests on a foundation whether said foundation be an extension of the base, or, as here shown a floor, regardless of the angular position of the suction or the discharge. This results from the fact that the cap-plate which carries it has such a connection both with the casing on one side and with the suction elbow on the other side, as will enable it to rest its foot on the foundation under all circumstances, while permitting the casing to be turned to adjust its discharge to any position desired, and permitting the suction elbow to be also turned to any desired position; or to permit both suction and discharge to be adjusted to suit any conditions found most practical in setting up the pump. The pump is thus provided with a permanent outer support on the suction side of its casing which avoids the usual expedient of temporarily blocking up under the casing.

I claim:—

1. In a centrifugal-pump, the combination of a base having a pedestal; a pump casing having a discharge; a connection between the pedestal and the pump casing adapted for the rotative adjustment of said casing to vary the angular position of its discharge; a cap-plate having a supporting foot adapted to rest on a foundation; a connection between the cap-plate and the casing adapted for the rotative adjustment of the casing; a suction-elbow; and a connection between said suction-elbow and the cap plate adapted for the rotative adjustment of said elbow.

2. In a centrifugal-pump, the combination of a main support; a pump casing having a discharge; a connection between the main support and the pump casing adapted for the rotative adjustment of said casing to vary the angular position of its discharge;

a cap-plate having a supporting foot adapted to rest on a foundation; a connection between the cap-plate and the casing adapted for the rotative adjustment of the casing; a suction-elbow; and a connection between said suction-elbow and the cap-plate adapted for the rotative adjustment of said elbow.

In testimony whereof I have signed my name to this specification in the presence of two subscribing witnesses.

WILLIAM DOUGLAS CARTER.

Witnesses:

A. B. SHORT,

E. R. WILLIAMS.