US005171294A

United States Patent [19]

Takano et al.

[11] Patent Number: 5,171,294

[45] Date of Patent: * Dec. 15, 1992

[54] TORQUE DISTRIBUTION CONTROL SYSTEM FOR A FOUR-WHEEL DRIVE MOTOR VEHICLE

[75] Inventors: **Toshio Takano; Toshio Kobayashi,** both of Tokyo, Japan

[73] Assignee: **Fuji Jukogyo Kabushiki Kaisha,** Tokyo, Japan

[*] Notice: The portion of the term of this patent subsequent to Nov. 19, 2008 has been disclaimed.

[21] Appl. No.: **772,629**

[22] Filed: **Oct. 7, 1991**

Related U.S. Application Data

[63] Continuation of Ser. No. 485,094, Feb. 23, 1990, abandoned.

[30] **Foreign Application Priority Data**

Feb. 28, 1989 [JP] Japan 1-048149
Jun. 30, 1989 [JP] Japan 1-170896

[51] **Int. Cl.**[5] **F16H 1/42**
[52] **U.S. Cl.** **475/249;** 180/248; 180/249
[58] **Field of Search** ..... 180/248, 249; 192/103 F; 475/84, 86, 87, 89, 91, 118, 121-123, 125, 225, 248, 249, 257

[56] **References Cited**

U.S. PATENT DOCUMENTS

4,466,502	8/1984	Sakai	180/248
4,481,877	11/1984	Takano et al.	192/0.032 X
4,691,593	9/1987	Mueller	180/249 X
4,779,487	10/1988	Pitsch et al.	180/249 X
4,882,950	11/1989	Gausrab et al.	180/248 X
4,884,650	12/1989	Fujiki et al.	180/248 X
5,066,268	11/1991	Kobayashi	475/249

FOREIGN PATENT DOCUMENTS

62-50233	3/1987	Japan	180/248
63-176728	7/1988	Japan .	

Primary Examiner—Leslie A. Braun
Assistant Examiner—Benjamin Levi
Attorney, Agent, or Firm—Martin A. Farber

[57] **ABSTRACT**

A system for controlling torque distributed to front wheels and rear wheels of a motor vehicle comprises a planetary gear device including a first sun gear connected to an output shaft of a transmission, a carrier, first and second planetary pinions coupled with each other and rotatably supported on the carrier, and a second sun gear disposed between a front torque transmitting member and a rear torque transmitting member. The first planetary pinion is engaged with the first sun gear, and the second planetary pinion is engaged with the second sun gear. A fluid operated multiple-disk clutch is disposed between the carrier and the rear torque transmitting member so as to restrict the differential operation of the planetary gear device.

1 Claim, 8 Drawing Sheets

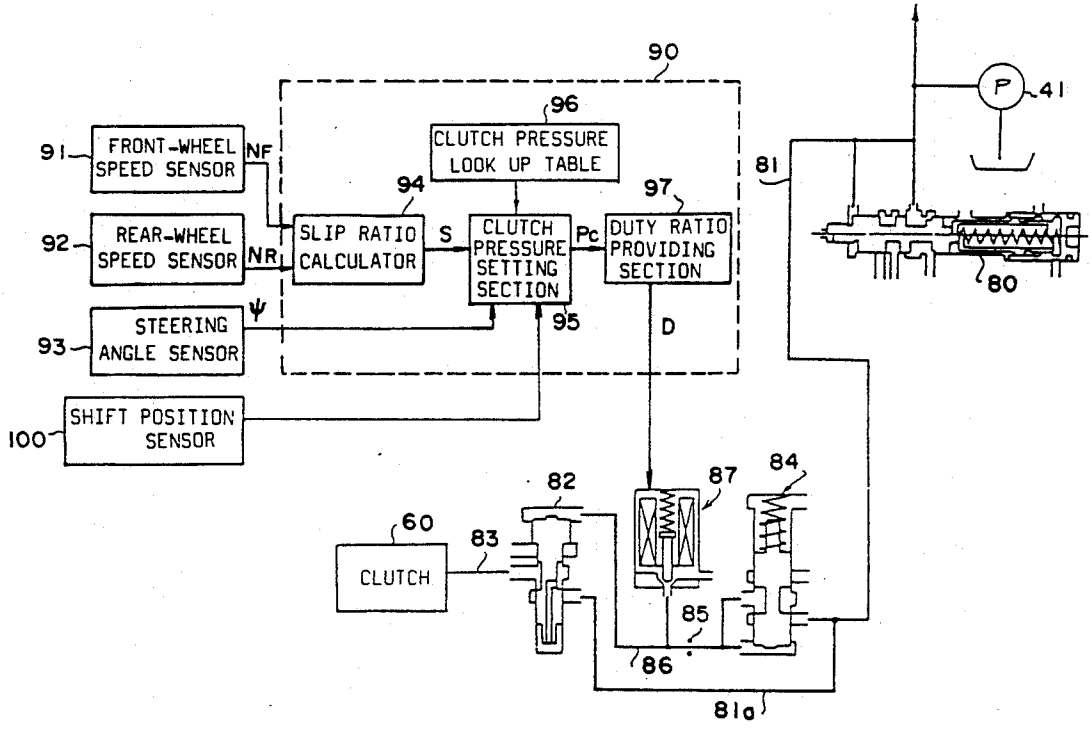

FIG. 1

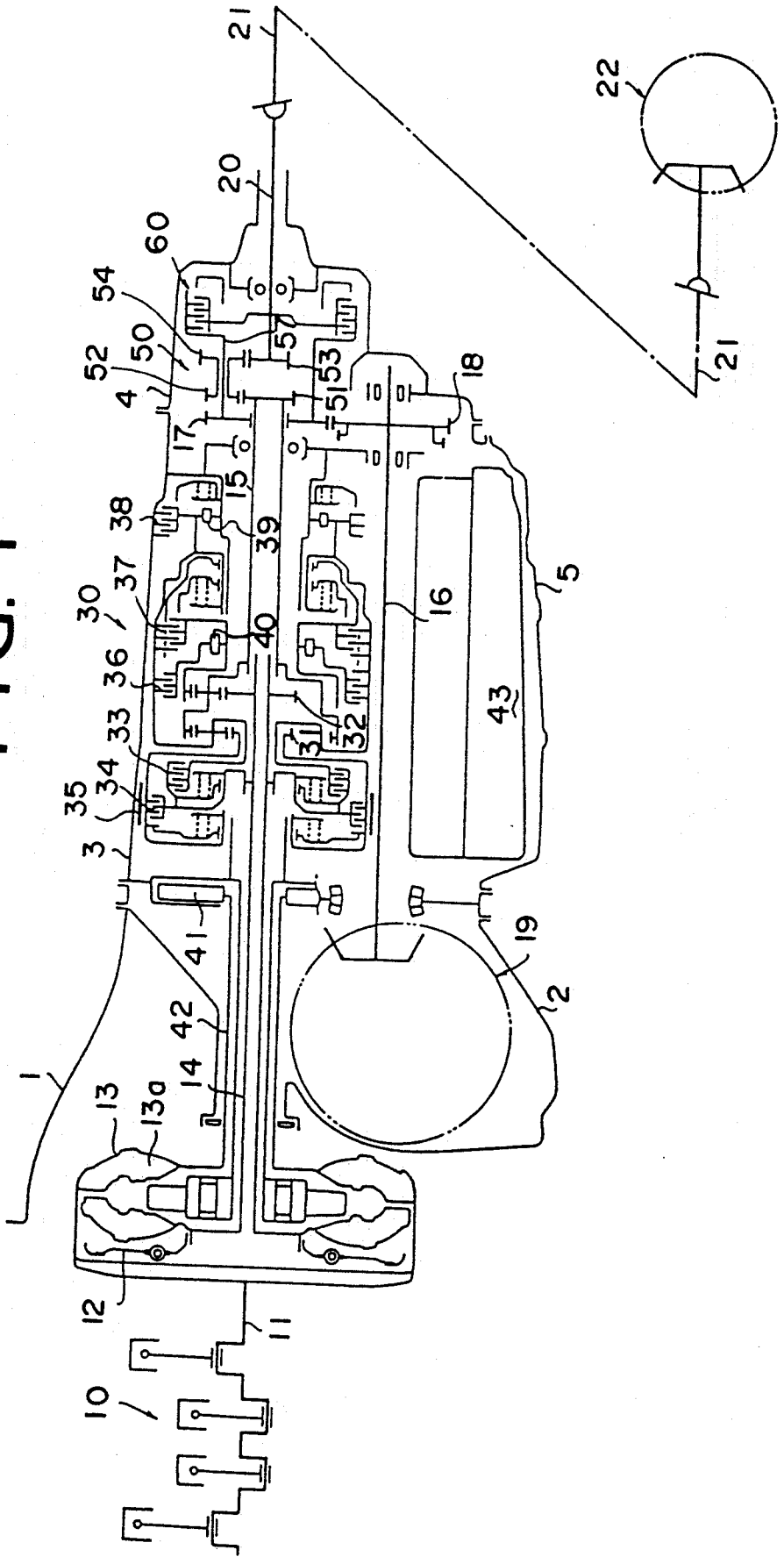
21
22
20
60
54
50
52
4
57
53
51
18
17
15
38
39
37
30
40
16
5
36
43
33
31
32
34
35
3
41
19
2
42
14
1
13
13a
12
11
10

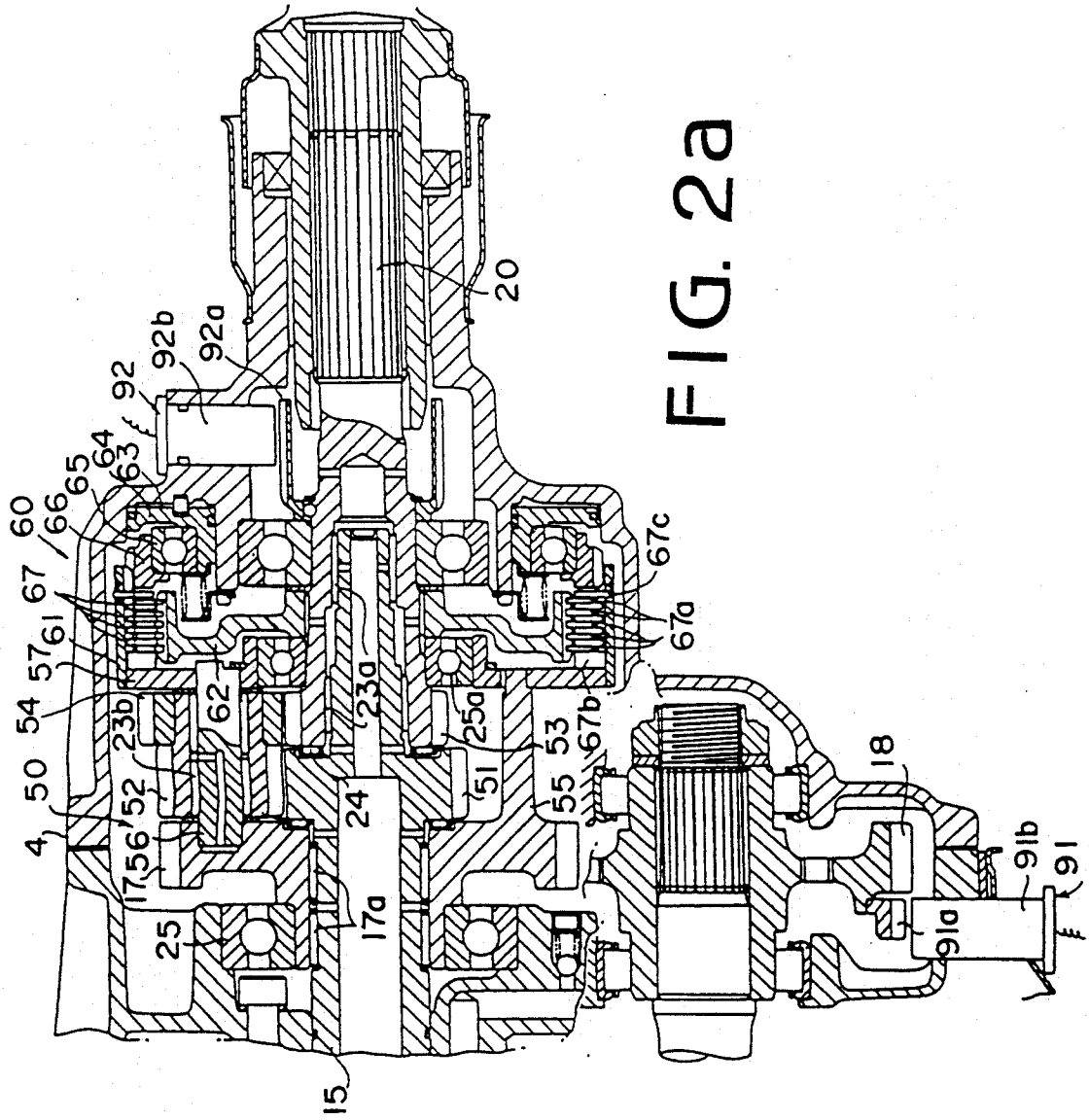
20
92b
92a
92
64
63
65
66
60
67
61
57
54
50
4
23b
52
56
17
62
23a
24
25a
51
53
55
67b
67c
67a
18
91b
91
91a
25
17a
15

FIG. 2a

FIG. 2b

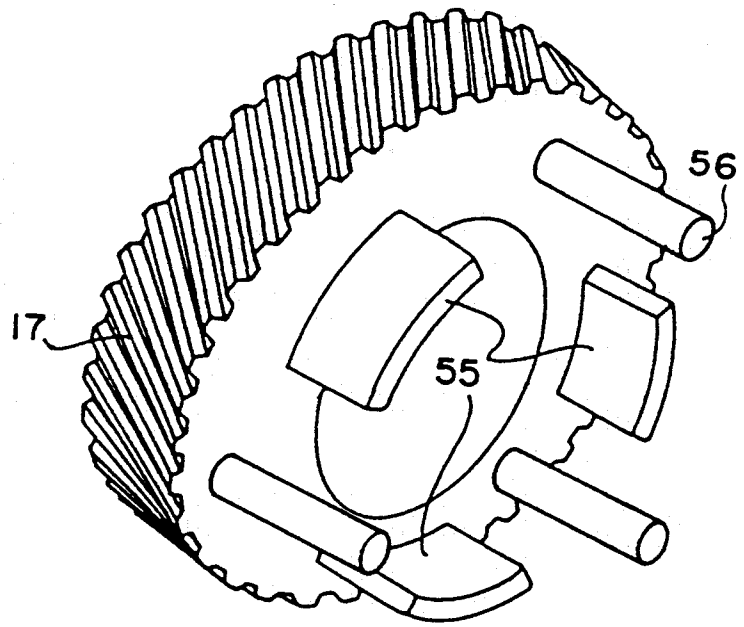

FIG. 3

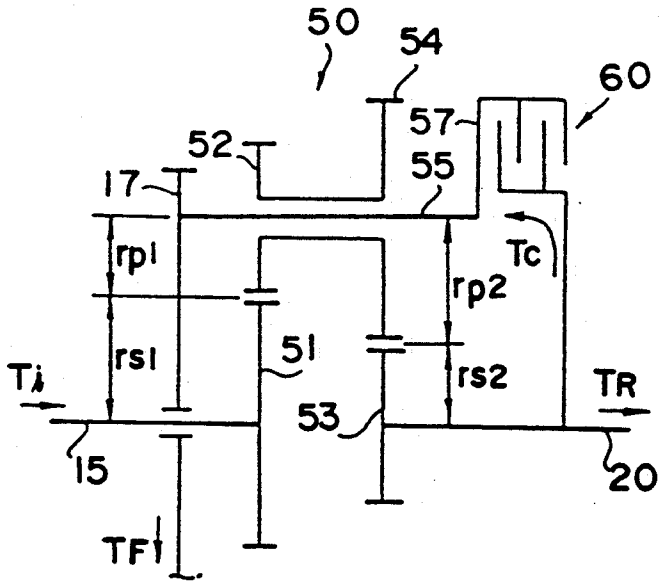

FIG. 4

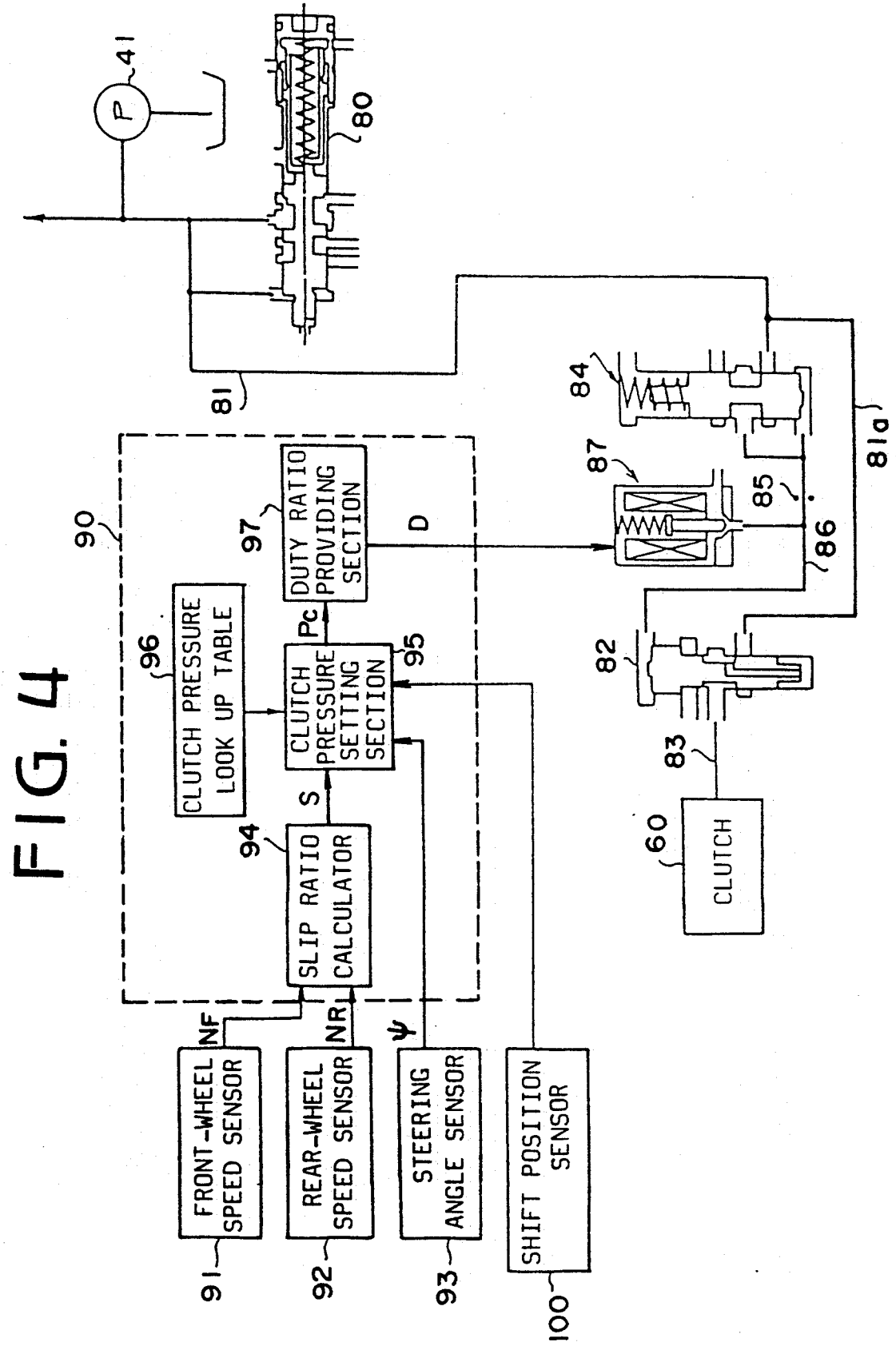
P
41
80
81
84
87
85
86
81a
82
83
60
CLUTCH
90
97
DUTY RATIO PROVIDING SECTION
D
Pc
95
CLUTCH PRESSURE SETTING SECTION
96
CLUTCH PRESSURE LOOK UP TABLE
S
94
SLIP RATIO CALCULATOR
NF
NR
Ψ
FRONT-WHEEL SPEED SENSOR
REAR-WHEEL SPEED SENSOR
STEERING ANGLE SENSOR
SHIFT POSITION SENSOR
91
92
93
100

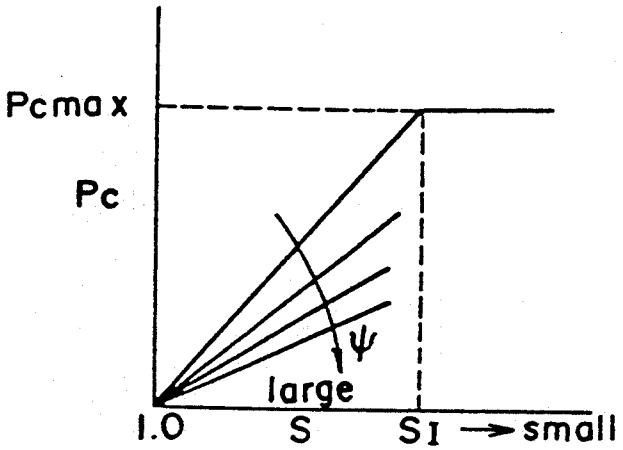

FIG. 5

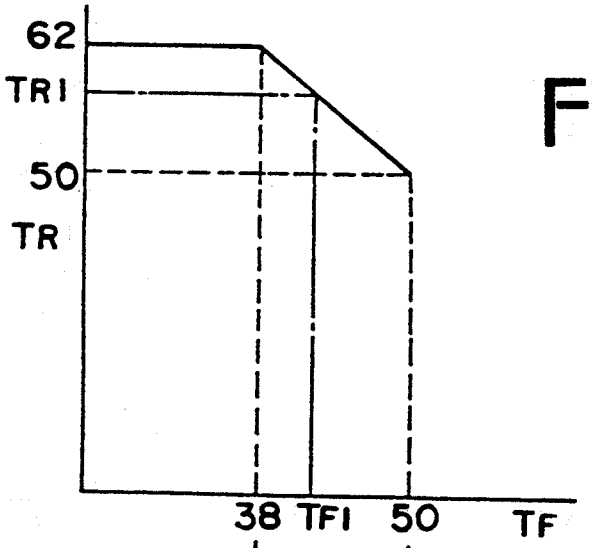

FIG. 6a

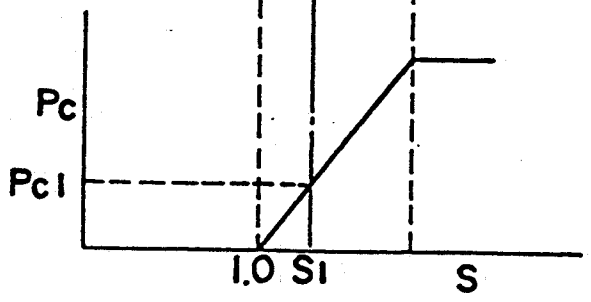

FIG. 6b

FIG. 7

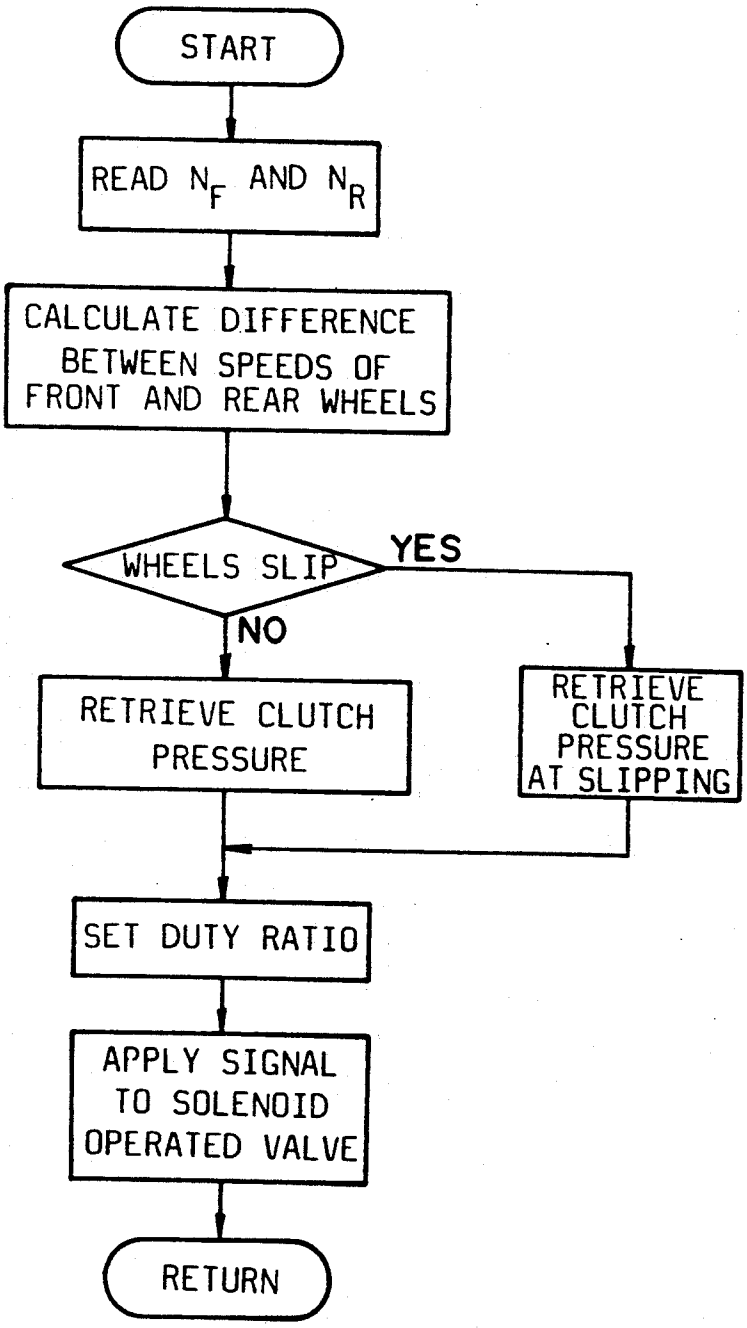
START
READ N_F AND N_R
CALCULATE DIFFERENCE BETWEEN SPEEDS OF FRONT AND REAR WHEELS
WHEELS SLIP
YES
NO
RETRIEVE CLUTCH PRESSURE
RETRIEVE CLUTCH PRESSURE AT SLIPPING
SET DUTY RATIO
APPLY SIGNAL TO SOLENOID OPERATED VALVE
RETURN

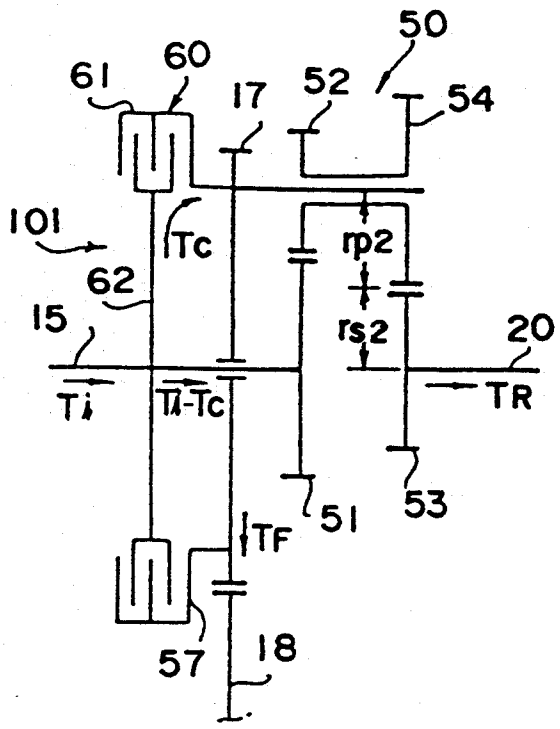
50
61
60
17
52
54
101
Tc
rp2
62
rs2
15
20
Ti
Ti-Tc
TR
51
53
TF
57
18

FIG. 8a

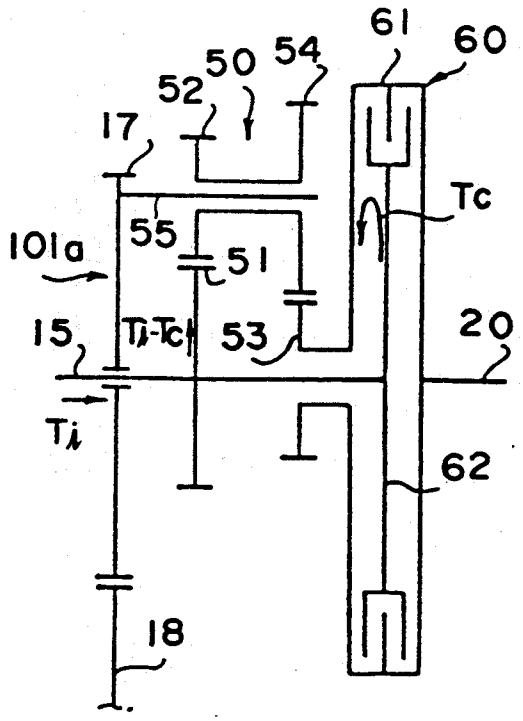
61
60
50
54
52
17
Tc
55
101a
51
15
Ti-Tc
53
20
Ti
62
18

FIG. 8b

TORQUE DISTRIBUTION CONTROL SYSTEM FOR A FOUR-WHEEL DRIVE MOTOR VEHICLE

RELATED APPLICATION

This application is a continuation of our co-pending application Ser. No. 07/485,094 filed Feb. 23, 1990, now abandoned.

BACKGROUND OF THE INVENTION

The present invention relates to a torque distribution control system for a four-wheel drive motor vehicle having a central differential.

In a four-wheel drive motor vehicle, a conventional torque distribution ratio of front wheels and rear wheels is determined in accordance with a dynamic load ratio of the front and rear wheels, considering the movement of the center of gravity of the vehicle at acceleration so that the power of the engine may be most effectively used.

In the four-wheel drive vehicle based on mainly front-drive with a front-mounted engine, the ratio of front torque T_F to the front wheels and rear torque T_R to the rear wheels are in the ratio of 50:50. In the four-wheel drive vehicle based on mainly rear-drive with a front-mounted engine, the front torque T_F and the rear torque T_R are in the ratio of 40:60. A central differential comprising bevel gears is provided in the former system in which the output torque of the engine is equally distributes, and a central differential having a simple planetary gear device is provided in the latter system.

The former system ensures safe driving on a slippery road. If a differential lock device is provided for locking the central differential, the driveability of the vehicle is improved. However, when the vehicle a turn at high speed under the differential lock all of four wheels may slip (i.e. the vehicle at the same time, causing difficult driving.

In order to ensure a driving stability of the vehicle, the torque to the rear wheels is set to a larger than that to the front wheels by arranging the differential comprising the simple planetary gear device, so that first the rear wheels may slip. Thus, the vehicle can be safely driven by the front wheels at a small torque while the rear wheels do not drive.

Japanese Patent Application Laid-Open 63-176728 discloses a four-wheel drive motor vehicle in which a central differential comprising a simple planetary gear device is provided. The output of a transmission is transmitted to a carrier of the planetary gear device. The torque is distributed to front wheels through either a sun gear or a ring gear and to rear wheels through the other gear. The torque to front and rear wheels is unequally distributed at the ratio determined by the difference between the pitch circles of the sun gear and the ring gear. A fluid operated multiple-disk friction clutch as a lock device is provided for controlling the differential operation. A wide range of torque distribution ratio determined by the ratio of the pitch circle can not be attained because the diameters of the sun gear and the ring gear are limited. However, it is difficult to change the diameters because of limitation of space.

Further, in a power transmitting system where an output shaft of a transmission is inserted in the sun gear of the planetary gear device, the diameter of the sun gear becomes large, which renders the size of a transfer device large and hence the space in the vehicle is reduced. Since the distribution of torque to the rear wheels can not be set to a large value, the control range of the multiple-disk friction clutch becomes small. Consequently, a motor vehicle having good driveability and, controllability can not be provided.

SUMMARY OF THE INVENTION

An object of the present invention is to provide a torque distribution control system for a for-wheel drive motor vehicle in which the standard torque ratio of the front wheels and rear wheels can be easily changed.

Another object of the present invention is to provide a system which can be applied to any kinds of motor vehicles having various layouts of the power transmission system.

A further object of the invention is to provide a system in which a large torque is distributed to the rear wheels, thereby enabling the control of a wide torque distribution range with a fluid operated friction clutch.

According to the present invention, there is provided a system for controlling torque distribution to front wheels and rear wheels of a motor vehicle having a transmission having an output shaft comprising a planet gear device including a first sun gear connected to the output shaft of the transmission, a carrier, first and second planetary pinions integral with each other and rotatably supported on the carrier, and a second sun gear, the first planetary pinion being engaged with the first sun gear, and the second planetary pinion being engaged with the second sun gear, a front torque transmitting member operatively connected to the carrier and to the front wheels, a rear torque transmitting member operatively connected to the second sun gear, a fluid operated multiple-disk clutch disposed between the second sun gear and the carrier, so as to restrict the differential operation of the planetary gear device, and control means for controlling the clutch torque of the multiple-disk clutch in accordance with driving conditions of the vehicle.

The other objects and features of this invention will become understood from the following description with reference to the accompanying drawings.

BRIEF DESCRIPTION OF DRAWINGS

FIG. **1** is a schematic diagram showing power transmission system for a four-wheel drive vehicle according to the present invention;

FIG. **2***a* is an enlarged sectional view showing a central differential of the system;

FIG. **2***b* is a perspective view showing a carrier provided in the central differential;

FIG. **3** is a schematic view showing the central differential;

FIG. **4** is a circuit showing a control system for a hydraulic clutch provided in the central differential;

FIG. **5** is a graph showing a clutch pressure look-up table;

FIG. **6***a* is a graph showing a relationship between front torque and rear torque;

FIG. **6***b* is a graph showing a characteristic of a clutch pressure in accordance with a slip ratio;

FIG. **7** is a flowchart showing the operation of a control unit in the control system; and

FIGS. **8***a* and **8***b* are schematic views showing other examples of the central differential.

DETAILED DESCRIPTION OF THE PREFERRED EMBODIMENTS

FIG. 1 shows a power transmission system in a transaxle type for a four-wheel drive motor vehicle having an engine **10** at a front portion thereof. The power transmission system has a torque converter **13** with a lockup clutch **12** mounted in a converter box **1**, and a front differential **19** mounted in a differential box **2** behind the torque converter **13**. A transmission case **3** housing an automatic transmission **30** is attached to the rear of the differential box **2**. An oil pan **5** is attached under the transmission case **3**. A crankshaft **11** of the engine **10** is operatively connected with the torque converter **13**. An input shaft **1** extends from a turbine of the torque converter **13** to the automatic transmission **30**. The output of the automatic transmission **30** is transmitted to an output shaft **15** which is aligned with the input shaft **14** for transmitting the torque rearwardly. The output shaft **15** is connected a front drive shaft **16** which is disposed in parallel under the automatic transmission **30** through a pair of reduction gears **17** and **18** of a central differential **50** housed in a transfer case **4**. The front drive shaft **16** is connected to front wheels of the vehicle through a front differential **19**. The output shaft **15** is connected to a rear drive shaft **20** through the central differential **50**. The rear drive shaft **20** is connected to rear wheels of the vehicle through a propeller shaft **21** and a rear differential **22**. A fluid operated multiple disk friction clutch **60** is provided in the central differential **50**. The automatic transmission **30** comprises two sets of single planetary gears consisting of a front planetary gear **31** and a rear planetary gear **32** for providing four forward speeds and one reverse speed. The automat transmission has a high clutch **33**, a reverse clutch **34**, a brake band **35**, a forward clutch **36**, an overrunning clutch **37**, a low and reverse clutch **38**, and one-way clutches **39** and **40**.

An oil pump **41** is provided in the front end of the transmission case **3**. A pump drive shaft **4** is connected to an impeller **13***a* of the torque converter **13** and is operatively connected with a rotor of the oil pump **41**.

In the oil pan **5**, a control valve body **43** is provided for hydraulically actuating the respective clutches and brake of the transmission **30**.

Referring to FIG. **2***a* showing the central differential **50**, an end of the rear drive shaft **20** is rotatably mounted on the output shaft **15** through a pair of needle bearings **23***a* and a thrust bearing **24**. The reduction gear **17** is rotatably mounted on the output shaft **15** through a pair of needle bearings **17***a*, and a boss of the reduction gear **17** is supported in the transmission case **3** through a bearing **25**. The central differential **50** is disposed between the output shaft **15**, reduction gear **17** and rear drive shaft **20**.

The central differential **50** is a complex planetary gear device and comprises a first sun gear **51** integrally formed on the output shaft **15**, a first planetary pinion **52** meshed with the first sun gear **51**, a second sun gear **53** integrally formed on the rear drive shaft **20**, a second planetary pinion **54** meshed with the second sun gear **53**, a carrier **57**. The carrier **57** is rotatably mounted on the drive shaft **20** through a bearing **25***a* and connected to the reduction gear **17** by carrier connecting members **55** projecting from the gear **17**. The first and second planetary pinions **52** and **54** are coupled with each other and supported on a shaft **56** through needle bearings **23***b*. The shaft **56** is secured to the gear **17** and the carrier **57**.

Thus, the output torque from the output shaft **15** of the transmission **30** is transmitted to the carrier **57** and the second sun gear **53** through the first sun gear **51** and pinions **52, 54** at predetermined respective torque distribution ratios. The difference between rotating speeds of the carrier **57** and the second sun gear **53** is absorbed by the rotation and revolution of the first and second planetary pinions **52** and **54**.

The operation of the central differential **50** for distributing the torque to the front wheels and the rear wheels will be described hereinafter with reference to FIG. **3**.

Input torque Ti of the first sun gear **51** and the relationship between the sun gears and the pinions are expressed as follows, respectively.

$$Ti = T_F + T_R \tag{1}$$

$$rs_1 + rp_1 = rs_2 + rp_2 \tag{2}$$

where T_F is the front torque transmitted from the carrier **57** to the front drive shaft **16**, T_R is the rear torque transmitted from the second sun gear **53** to rear drive shaft **20**, rs_1 is the radius of the pitch circle of the first sun gear **51**, rp_1 and rp_2 are radii of pitch circles of the first and second pinions **52** and **54**, respectively, and rs_2 is the radius of the pitch circle of the second sun gear **53**.

A tangential load P on the engaging point of the first sun gear **51** and the first pinion **52** is equal to the sum of a tangential load P_1 on the carrier **57** and a tangential load P_2 on the engaging point of the second sun gear **53** and the second pinion **54**. That is,

$$\begin{aligned} P &= Ti/rs_1 \\ P_1 &= T_F/(rs_1 + rp_1) \\ P_2 &= T_R/rs_2 \\ Ti/rs_1 &= \{(T_F/(rs_1 + rp_1)\} + T_R/rs_2 \end{aligned} \tag{3}$$

Substituting equations (1) and (2) for the equation (3),

$$T_F = (1 - rp_1 \cdot rs_2/rs_1 \cdot rp_2) \cdot Ti$$

$$T_R = (RP_1 \cdot rs_2/rs_1 \cdot rp_2) \cdot Ti$$

Consequently, it will be seen that the standard torque distribution for the front torque T_F and the rear torque T_R can be set to various values by changing the radii of the pitch circles of the sun gears **51** and **53** and the pinions **52** and **54**.

If rs_1 is 23.5 mm, rp_1 is 16.5 mm, rp_2 is 18.8 mm and rs_2 is 21.2 mm, the front torque T_F and the rear torque T_R are calculated as

$$TF_F = 20/53 \cdot Ti$$

$$T_R = 33/53 \cdot Ti$$

Thus, the torque distribution ratio of the front wheels and the rear wheels is

$$T_F : T_R = 38:62$$

A large standard torque can be distributed to the rear wheels.

The clutch **60** comprises a drive drum **61** secured to the carrier **57**, a driven drum **62** secured to the rear drive shaft **20**, a plurality of disks **67** splined on the drum **61**, and a plurality of disks **67***a* splined on the drum **62**, alternately arranged. A retainer **67***b* is abutted

at an innermost disk 67*a*. A piston **64** is slidably mounted in the transfer case **4**. A pressure plate **66** is connected to the piston **64** through a bearing **65** and engaged with a retainer **67***c* of the drum **61**. An oil chamber **63** is formed between the piston **64** and the transfer case **4**. Thus, the clutch **60** is provided between the carrier **57** and the second sun gear **53** so as to change the torque distribution ratio and to lock the central differential.

When oil is supplied to the chamber **63** the piston **64** is pushed by the pressure of the oil. The pressure plate **66** pushes the disks **67** and **67***a* to engage the clutch **60** for producing a clutch torque.

A front-wheel speed sensor **91** is mounted on the transmission case **3** such that a pickup **91***b* of the sensor **91** is disposed adjacent to a parking gear **91***a* secured to the reduction gear **18** for detecting front-wheel speed N_F. A rear-wheel speed sensor **92** is mounted on the transfer case **4** so as to dispose a pickup **92***b* adjacent to a pulse gear **92***a* secured to the rear drive shaft **20** for detecting a rear-wheel speed N_R.

Referring to FIG. **4** showing a control system for the clutch **60**, a hydraulic circuit of the control system comprises a pressure regulator valve **80**, a pilot valve **84**, a clutch control valve **82** and a solenoid operated duty control valve **87**. The regulator valve **80** operates to regulate the pressure of oil supplied from the oil pump **41** driven by the engine to produce a line pressure and the line pressure is applied to a line pressure conduit **81** for controlling the transmission. The conduit **81** is communicated with a passage **86** through the pilot valve **84**. The passage **86** is communicated with the solenoid valve **87** downstream of an orifice **85**, and with an end of the clutch control valve **82**. The conduit **81** is communicated with the clutch control valve **82** through a passage **81***a*. The clutch control valve **82** is communicated with the clutch **60** through a passage **83**. The solenoid valve **87** is operated by pulses from a control unit **90** at a duty ratio determined therein so as to provide control to drain the oil for providing a control pressure. The control pressure is applied to an end of a spool of the clutch control valve **82** to control the oil supplied to the clutch **60** so as to control the clutch pressure (torque).

The control unit **90** is supplied with an output signal from the front-wheel speed sensor **91**, the rear-wheel speed sensor **92**, a steering angle sensor **93** and a shift position sensor **100** for detecting a shift position of the automatic transmission **30**.

The control unit **90** has a slip ratio calculator **94** to which the front-wheel and rear-wheel speeds N_F and N_R are applied. Since the standard torque distribution is determined in accordance with the principle of $T_F<T_R$, the rear wheels slip first. A slip ratio S is calculated in accordance with the ratio of the front-wheel speed N_F to the rear-wheel speed N_R, $S=N_F/N_R(S>0)$. The slip ratio S, a steering angle ψ, and a shift position signal from the sensors **93** and **100** are applied to a clutch pressure setting section **95**. In accordance with input signals, the clutch pressure setting section **95** retrieves a clutch pressure Pc from a clutch pressure look up table **96**.

FIG. **5** shows clutch pressures stored in the look up table **96**. When the slip ratio S is $S>1$, which means that the rear wheels do not slip, the clutch pressure Pc is set to a small value. When the rear wheels slip and the slip ratio S becomes $S<1$, the clutch pressure Pc (clutch torque) increases with a decrease of the slip ratio S. When the slip ratio S becomes smaller than a set values SI, the clutch pressure Pc is set to a maximum value Pcmax. Further, when the steering angle ψ increases, the clutch pressure Pc is decreased, thereby preventing the tight corner braking phenomena.

The clutch pressure Pc is applied to duty ratio providing section **97** where a duty ratio D corresponding to the derived clutch pressure Pc is provided. A duty ratio D provided at the section **97** is applied to the solenoid operated duty control valve **87**.

FIG. **7** is a flowchart showing the operation of the control unit **90**.

As aforementioned, the front-wheel speed N_F and the rear-wheel speed N_R are detected and slipping of front wheels and rear wheels is calculated. If the slip ratio is smaller than the set value, a differential operation restricting clutch torque (pressure Pcmax) is derived from the look up table **96** in accordance with the throttle opening degree, the vehicle speed, the shift position and the steering angle. The duty ratio corresponding to the derived clutch torque is applied to the solenoid operated valve **87**. When the slip ratio is larger than the set value, a clutch torque is derived from the look up table **96** for operating the valve **87** at slipping.

Describing the operation of the system the power of the engine **10** is transmitted through the torque converter **13** and the input shaft **14** to the transmission **30** at which the transmission ratio is automatically controlled. The output of the transmission is transmitted to the first sun gear **51** of the central differential **50**. The front torque T_F and the rear torque T_R are determined in accordance with the radii of gears of the central differential **50**. The torque is transmitted to the reduction gear **17** through the carrier **57** at a ratio of 38% for example and to the second sun gear **53** at the ratio of 62%.

If a no slip state is detected in the control unit **90** while the vehicle is driven on the dry road, a signal corresponding to the duty ratio of 100% is applied from the duty ratio providing section **97** to the solenoid operated duty control valve **87**. Thus, the clutch control pressure becomes zero and the clutch control valve **82** operates to close the passage **81***a*, thereby draining the oil from the clutch **60**. The clutch **60** is disengaged and the clutch torque becomes zero so as to render the central differential **50** free.

Accordingly, the torque of the reduction gear **17** is transmitted to the front wheels through the reduction gear **18**, the front drive shaft **16** and the front differential **19** at the ratio of 38%. Therefore the 62% torque at distribution ratio is transmitted to rear wheels through the second sun gear **53**, the rear drive shaft **20**, the propeller shaft **21** and the rear differential **22**. This, a full-time four-wheel driving is established.

At the standard torque distribution ratio, the vehicle is driven under the understeer condition, so that good operability is ensured. Further, the vehicle smoothly negotiates a sharp corner due to the differential operation of the central differential **50**.

If the vehicle is driven on a slippery road, the rear wheels slip first because the larger amount of torque is distributed to the rear wheels. The slip ratio S1 is calculated at the slip ratio calculator **94** of the control unit **90**. A duty signal corresponding to clutch pressure Pc_1 in accordance with the slip ratio S_1 ($S<1$) is applied to the solenoid operated valve **87**. The clutch control valve **82** is operated by the control pressure of oil obtained by regulating the line pressure at the solenoid operated

valve **87**, so that the clutch **60** is engaged at the clutch pressure Pc_1. Consequently, a clutch torque Tc is produced in the clutch **60**. The clutch **60** is provided in parallel with the carrier **57** and the second sun gear **53** of the central differential **50**. Accordingly, the clutch torque Tc is transmitted from the second sun gear **53** to the carrier **57** to increase the torque to the front wheels. Thus, the distribution ratio of the front torque and the rear torque T_F:T_R becomes T_{F1}:T_{R1}, respectively, as shown in FIG. **6***a*. To the contrary, the torque to the rear wheels is reduced to eliminate slipping, thereby improving driveability to ensure good operability and safe driving.

When the slip ratio S becomes smaller than the set value SI, the differential operation restricting torque becomes maximum by the pressure of oil in the clutch **60**. Thus, the carrier **57** is directly engaged the second sun gear **53** to lock the central differential. Thus, the four-wheel driving is established in with the torque distribution corresponding to the axle loads of the front and the rear wheels. Thus, the torque distribution is continuously controlled in accordance with the slipping condition for preventing the wheels from slipping.

When the vehicle makes a turn, the clutch torque of the clutch **60** is decreased in accordance with the steering angle ψ, so that the differential limit operation of the central differential **50** is decreased to sufficiently absorb the rotating difference in speeds of the front and rear wheels, thereby preventing the tight corner braking and ensuring good operability.

FIG. **8***a* shows another example of the central differential. The fluid operated multiple-disk clutch **60** is disposed between the reduction gear **17** and the output shaft **15** of the transmission. Thus, a bypass system **101** comprising the clutch **60** is provided for the transmitting system from the output shaft **15** to the front drive shaft **16** and to the rear drive shaft **20** through the central differential **50**. When the rear wheels slip the speed difference in the central differential becomes as follows:

rear-wheel speed N_R > speed of output shaft **15** > front-wheel speed N_F.

A part of the output torque of the shaft **15** is directly transmitted to the reduction gear in accordance with the clutch torque Tc. The remaining torque is transmitted to the rear drive shaft **20** from the first sun gear **51** through the first and second pinions **52** and **54** and the second sun gear **53**. The front-wheel torque T_F and the rear-wheel torque T_R are as follows.

$$T_F = 0.38\,(Ti - Tc) + Tc$$

$$T_R = 0.62\,(Ti - Tc)$$

Since the clutch torque Tc is zero in the no slip state, the torque distribution ratio of the front and the rear wheels is T_F:T_R=38:62. When the rear wheels slip to produce clutch torque Tc, the input torque Ti to the clutch torque Tc is directly transmitted to the front wheels. The input torque Ti transmitted to the front wheels becomes large in accordance with the clutch torque Tc.

In the central differential of FIG. **8***b* the output shaft **15** extends through the second sun gear **53**. The multiple-disk clutch **60** is disposed between the second sun gear **53** and the output shaft **15**. Thus, a bypass system **101***a* comprising the second sun gear **53**, the second pinion **54**, the carrier connecting members **55**, and the reduction gear **17** is provided for the output shaft **15**. The front-wheel torque T_F and the rear-wheel torque T_R are as follows

$$T_F = 0.38\,(Ti + Tc)$$

$$T_R = 0.62\,(Ti + Tc) - Tc$$

When the rear wheels slip, the torque corresponding to the sum of the clutch torque Tc and the input torque Ti is transmitted to the front wheels.

The system of the present invention can be employed in a four-wheel drive motor vehicle of other types such as the type of the rear drive with a front engine. The reduction gear **17** may be replaced with sprocket wheels and chains.

In accordance with the present invention, the central differential comprises two pairs of the sun gears and the planetary pinions and the carrier. The standard torque distribution to the front wheels and the rear wheels is determined by the radii of the pitch circles of the gears and the pinions. Thus, the standard torque distribution ratio can be set to various values.

Accordingly, the system may be made to distribute larger torque to the rear wheels than that to the front wheels, without changing the size of the system. Since large torque is transmitted to the rear wheels, a wide range of controlling the torque distribution can be performed. Thus, operability and driveability of the vehicle are accurately and properly attained, thereby improving efficiencies thereof.

While the presently preferred embodiments of the present invention have been shown and described, it is to be understood that these disclosures are for the purpose of illustration and that various changes and modifications may be made without departing from the scope of the invention as set forth in the appended claims.

What is claimed is:

1. A system for controlling torque distribution to front wheels and rear wheels of a motor vehicle, having a transmission with an output shaft, a front wheel speed sensor for detecting front wheel speed and for producing a front wheel speed signal, and a rear wheel speed sensor for detecting rear wheel speed and for generating a rear wheel speed signal, a steering angle sensor for detecting steering angle of a front wheel and for outputting a steering angle signal, and a shift position sensor for detecting a shift position of said transmission, the system comprising:

a planetary gear device including a first sun gear connected to said output shaft of said transmission, a carrier, first and second planetary pinions coupled with each other and rotatably supported on said carrier, and a second sun gear;

said first planetary pinion being engaged with said first sun gear, and the second planetary pinion being engaged with said second sun gear;

a front torque transmission member operatively connected to said carrier and to said front wheels;

a rear torque transmitting member operatively connected to said second sun gear;

a fluid operated multiple-disk clutch disposed between said second sun gear and another member of said

control means responsive to said front and rear wheel speed signals and said steering angle signal for calculating a slip ratio between said front and rear wheel speed signals and for accurately controlling clutch torque of said multiple-disk clutch in depen-

dency on said slip ratio in a wide range so as to decrease torque distribution to the rear wheels with respect to the front wheels in accordance with an increasing function of rear wheel slippage and with decreasing steering angle, the planetary gear device absorbing speed difference between the front and rear wheels as the steering angle increases, thereby preventing tight corner braking and ensuring good operability.

* * * * *