C. E. A. GRONBECH.

SAFETY RAZOR.

APPLICATION FILED AUG. 13, 1919.

1,370,960. **Patented Mar. 8, 1921.**

Fig. 1.

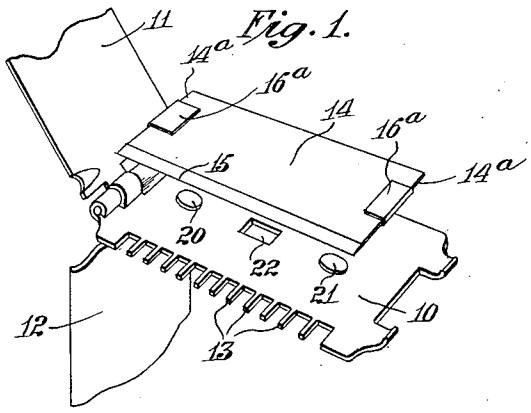

Fig. 2.

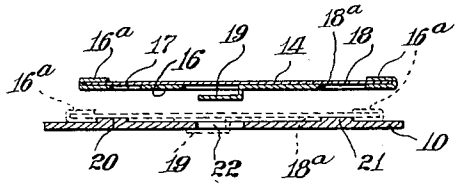

Fig. 3.

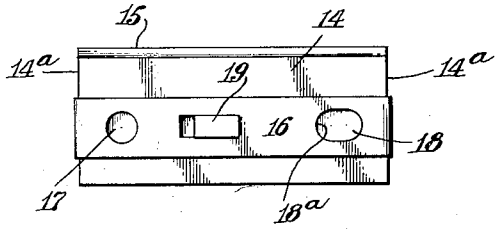

Christian E. A. Gronbech

INVENTOR

BY Attorneys

ATTORNEY

WITNESS

C. Mitchell

UNITED STATES PATENT OFFICE.

CHRISTIAN E. A. GRONBECH, OF WOODHAVEN, NEW YORK.

SAFETY-RAZOR.

1,370,960. Specification of Letters Patent. Patented Mar. 8, 1921.

Application filed August 13, 1919. Serial No. 317,323.

To all whom it may concern:

Be it known that I, CHRISTIAN E. A. GRONBECH, a citizen of the United States, residing at Woodhaven, Long Island, in the county of Queens and State of New York, have invented certain new and useful Improvements in Safety-Razors, of which the following is a specification.

My invention relates generally to improvements in safety razors, and is more particularly concerned with means for adjustably retaining the blade in position in a safety razor.

The present invention may be used with a number of types of safety razors, but its particular application is in connection with the type of folding safety razor forming the subject matter of a copending application for patent, Serial Number 297,252 filed May 15, 1919, in the names of Winfred H. Van Gorder and Christian E. H. Gronbech.

Stated in general terms, the invention comprises a blade holder, in which the blade may be adjusted, such blade holder provided with means coöperating with complemental means in a part of the razor for securely retaining the blade in adjusted position in the razor.

The invention is illustratively exemplified in the accompanying drawing, in which like letters of reference refer to like parts throughout, and wherein Figure 1 is a perspective view of part of a folding safety razor with the blade about to be placed in position therein. Fig. 2 is a sectional elevation, the blade being shown above the base plate of the razor in one position, and resting on the base plate in a second, dotted line position, and Fig. 3 is a bottom plan view of the blade and its holder.

As stated above, the invention may be used in a variety of types of razors, and that shown in the drawing is a folding safety-razor comprising a base plate 10, having hinged to one end thereof a cover plate 11 and a handle member 12. A fragment only of the cover plate 11 is shown, and at the outer end of the complete plate 11 is another handle member like 12 but which it is deemed unnecessary to show in the drawing. The base plate 10 is provided with guard teeth 13, such teeth appearing at only one of the longer sides of the base plate 10 although it is obvious that, if desired, both longer sides of the plate may have such guard teeth.

The blade 14, which is provided with one cutting edge 15 although it may be provided with two if preferred, is adjustably mounted in a blade holder consisting of a strap or band 16 the opposite ends 16^a of which are turned or lapped over the opposite ends 14^a of the blade. The band 16 is considerably narrower than the blade, and the latter is fairly tightly held in the band although capable of lateral adjustment therein.

Adjacent the ends 14^a of the blade, although set in somewhat therefrom, the band 16 is formed with two holes 17 and 18, the former being a true circle in shape, and the latter being elongated or substantially elliptical in shape. Intermediate the holes 17 and 18 an angular hook or spur 19 is punched or formed out of the material of the band 16.

The base plate 10 of the razor is provided with oppositely arranged studs 20 and 21, and between the same a rectangular preferably oblong opening 22, the studs coöperating with the holes 17 and 18 and the opening being designed to receive the hook or spur.

The device may be manipulated as follows:—To secure the desired projection of the cutting edge 15 the blade is moved back or forth in the strap 16 the proper extent. Thereafter the blade holder with the blade therein is positioned over the base plate 10, as shown in Fig. 1, with the spur 19 over the opening 22 and the holes 17 and 18 over the studs 20 and 21, respectively. Then the spur is passed through the opening 22 and the blade holder moved to the left (Fig. 2) whereby the spur will engage the under face of plate 10, the elongated hole 18 will permit such lateral movement of the blade holder, and finally the hole 17 will snap over and onto the stud 20 and the plate holder will be firmly secured to the plate 10. In this position of the parts the inner end of the elongated hole 18 is approximately at the point 18^a, while the outer end of the hole 18 or rather the wall thereof will engage the outer periphery of the stud 21. To release the blade holder from plate 10, the left hand end of the holder is raised so as to clear the hole 17 of the stud 20, whereupon the holder is moved to the right until the spur is free of the under face of the plate 10, and then the holder may be raised from the plate 10,

What I claim is:—

1. A razor blade holder, comprising an adjustable strap embracing the blade, and means whereby the strap may be removably secured to a part of a razor.

2. A razor blade holder, comprising a strap having its opposite ends turned over the ends of the blade, said strap capable of adjustment in relation to the edge of said blade and means in the strap for removably securing the same to a part of a razor.

3. A razor blade holder, comprising a strap embracing the blade and means whereby the strap may be removably secured to a part of a razor, in combination with the base plate of a razor, and means thereon cooperating with the means of the strap for removably securing the holder to the plate.

4. In a device of the character described, the combination with the base plate of a razor having a central opening and oppositely disposed studs, of a blade holder having a central spur for engaging said opening and oppositely disposed holes for engagement with said studs.

5. In a device of the character described, the combination with the base plate of a razor having a central rectangular opening and oppositely disposed studs, of a blade holder having a central bent spur for engaging said opening and oppositely disposed differently shaped holes for engagement with said studs.

In testimony whereof I have affixed my signature in presence of two witnesses.

CHRISTIAN E. A. GRONBECH.

Witnesses:
CLARICE FRANCK,
PAULA WEBBER.