US 20110282160A1

(19) **United States**

(12) **Patent Application Publication**

Bhadri et al.

(10) **Pub. No.: US 2011/0282160 A1**

(43) **Pub. Date: Nov. 17, 2011**

(54) **SELF CONTAINED ILLUMINATED INFUSION CANNULA SYSTEMS AND METHODS AND DEVICES**

(75) Inventors: **Prashant Bhadri**, Pico Rivera, CA (US); **Ralph Kerns**, Laguna Niguel, CA (US); **Jaw-Chyng Lormen Lue**, San Gabriel, CA (US); **Matthew McCormick**, Forest Falls, CA (US); **Mark Humayun**, Glendale, CA (US)

(73) Assignee: **DOHENY EYE INSTITUTE**, Los Angeles, CA (US)

(21) Appl. No.: **13/106,780**

(22) Filed: **May 12, 2011**

Related U.S. Application Data

(60) Provisional application No. 61/334,531, filed on May 13, 2010.

Publication Classification

(51) **Int. Cl.**
A61B 1/06 (2006.01)

(52) **U.S. Cl.** **600/236**

(57) **ABSTRACT**

A cannula is described having a housing, a first lumen, a second lumen, and a port capable of fluid communication with the first lumen. The second lumen configured to receive fluid from the first lumen and to direct the fluid to a surgical site. A light emitting diode light source is positionable within the housing and configured to direct light through the second lumen to the surgical site.

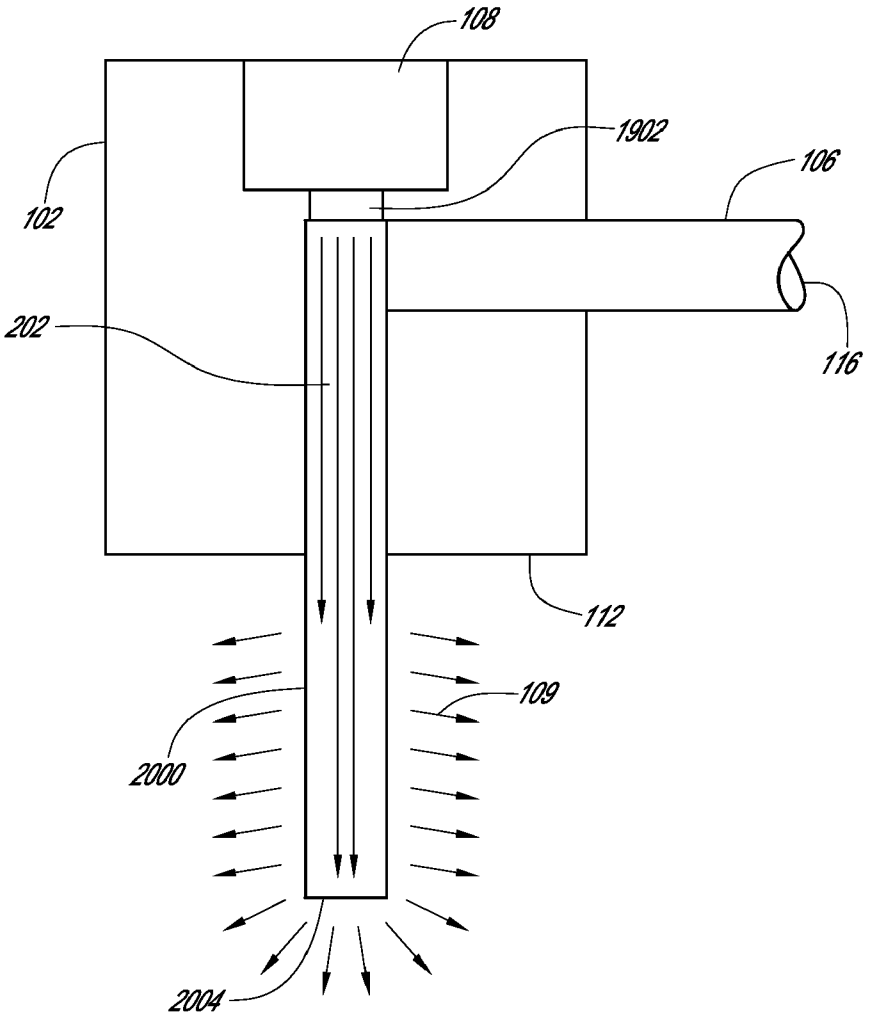

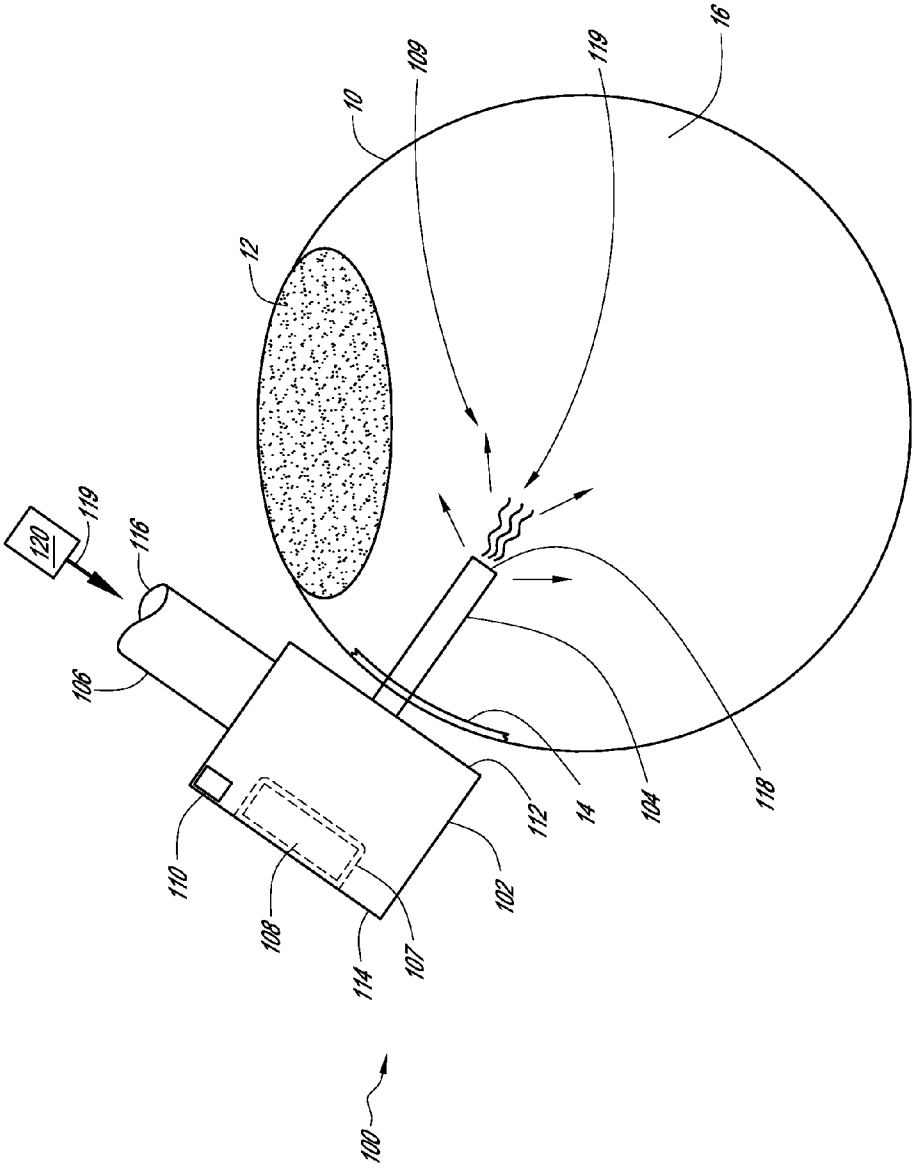
16
109
119
10
12
120
119
116
106
112
14
104
118
110
108
107
114
102
100

FIG. 1

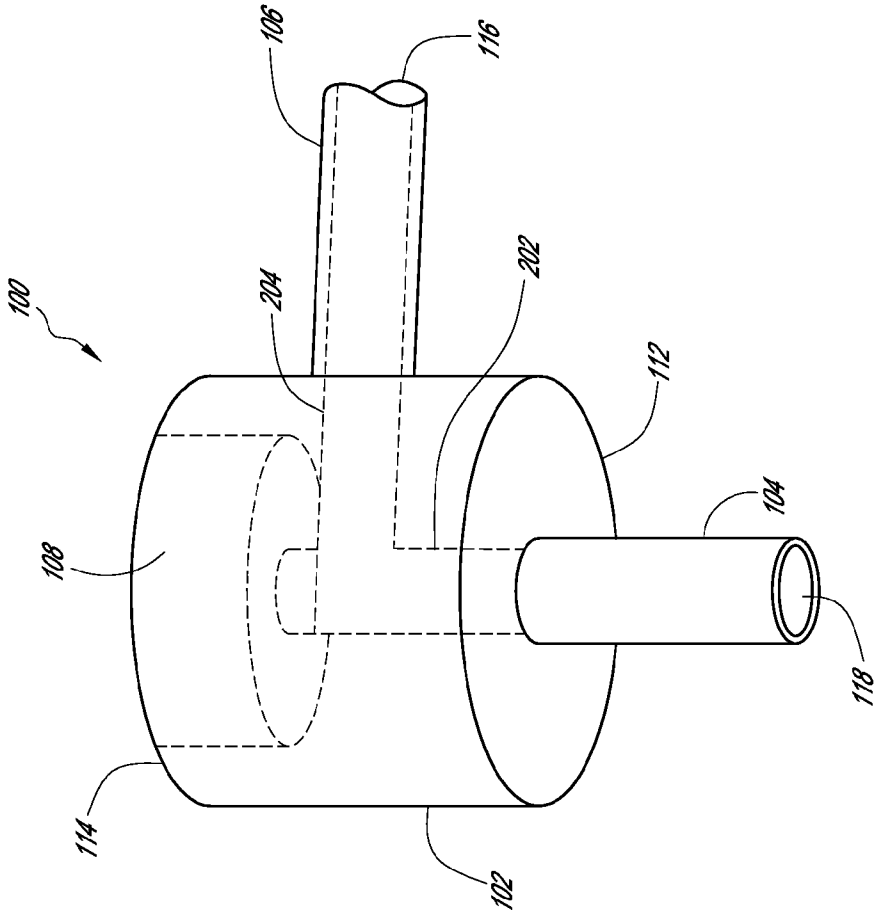

FIG. 2

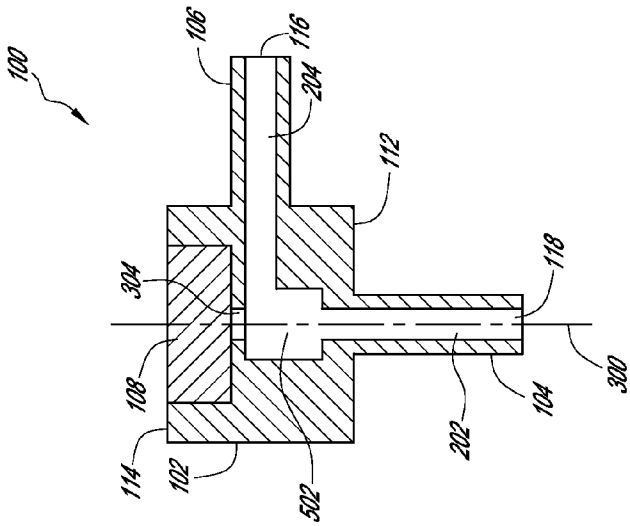

FIG. 5

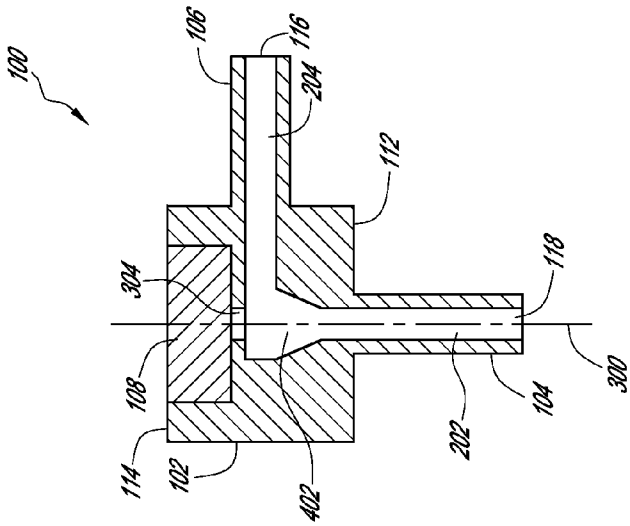

FIG. 4

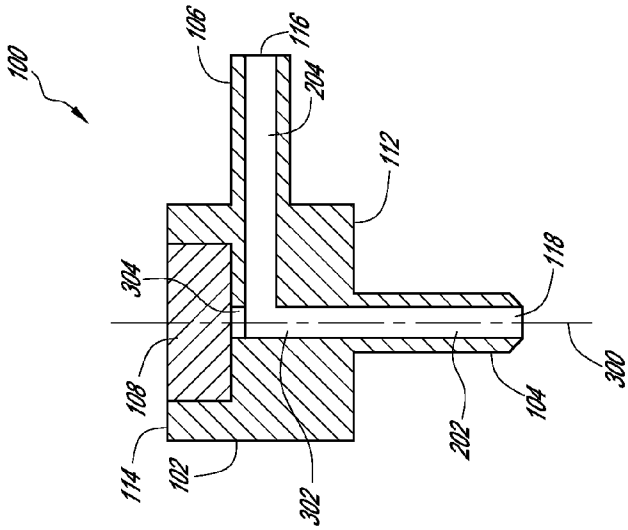

FIG. 3

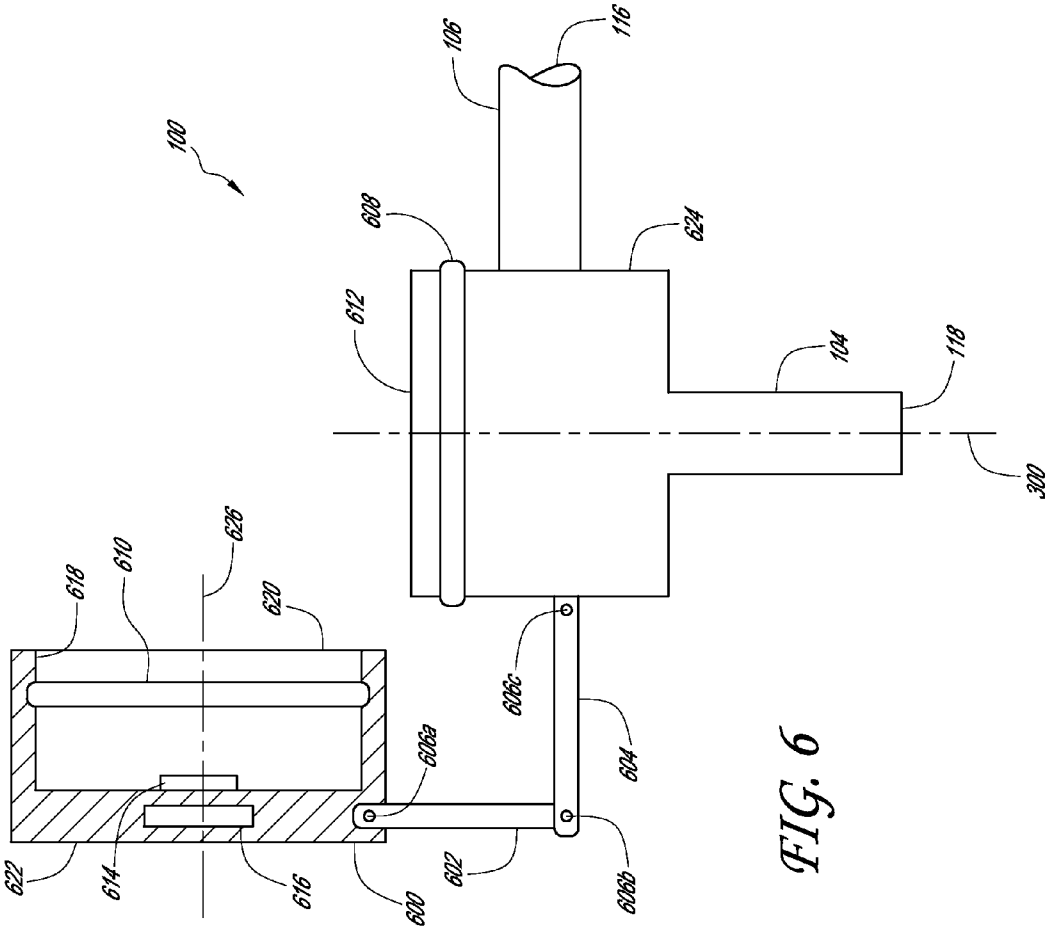
100
106
116
608
624
612
104
118
300
626
618
610
620
606c
606a
604
622
614
616
600
602
606b

FIG. 6

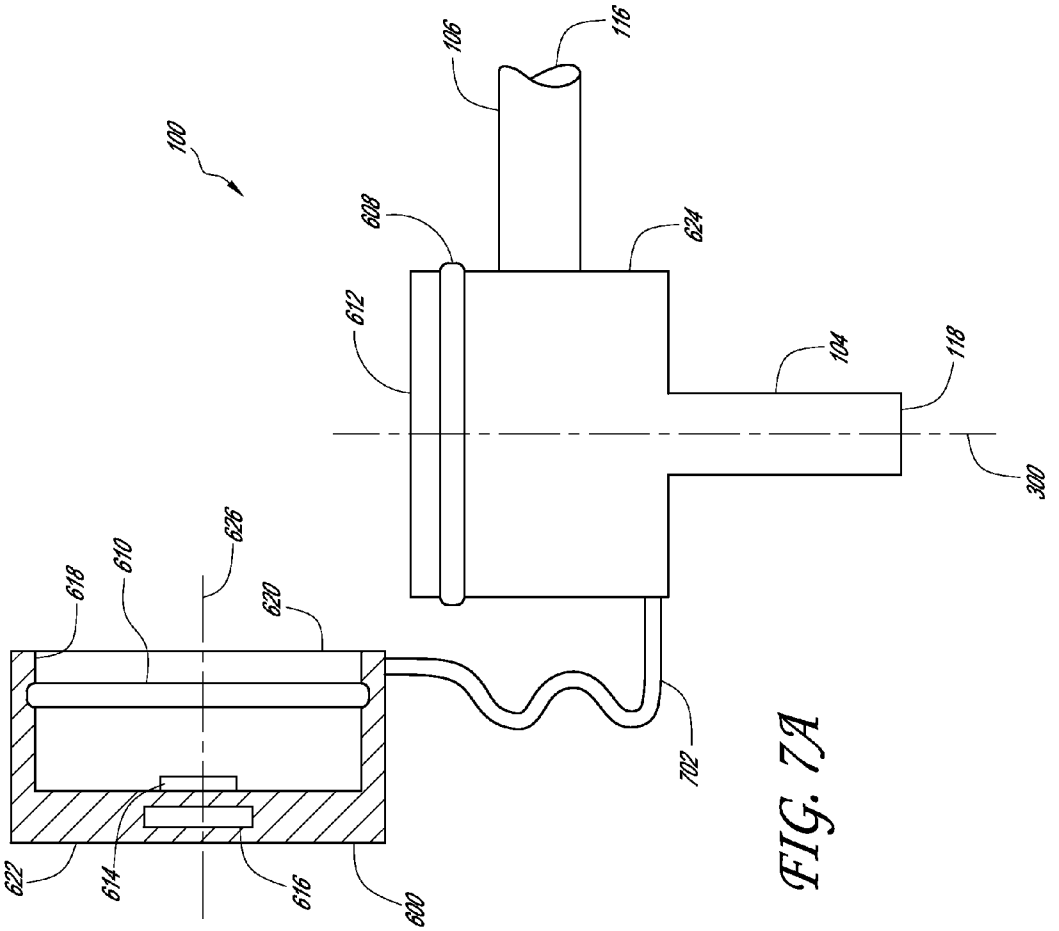
100
106
116
608
624
612
104
118
300
626
610
618
620
622
614
616
600
702

FIG. 7A

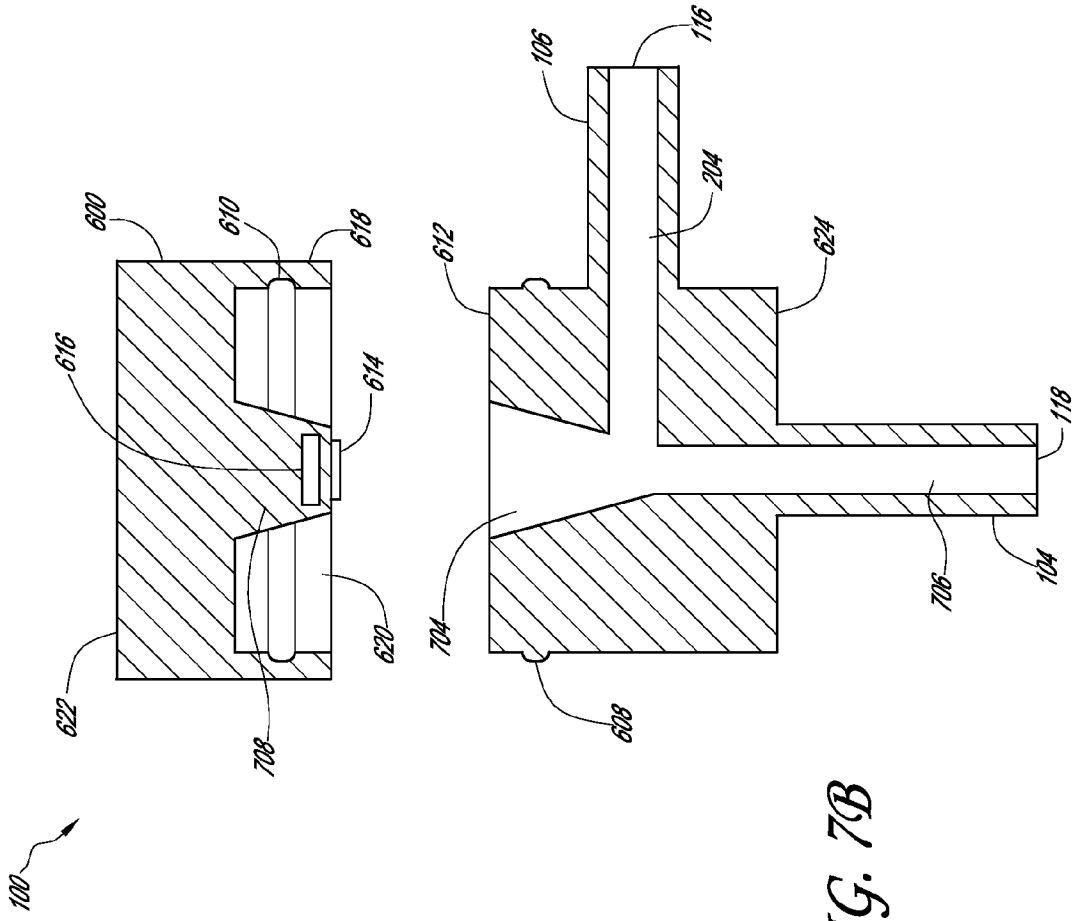
100
600
610
618
616
614
620
622
708
106
116
204
612
624
118
704
706
104
608

FIG. 7B

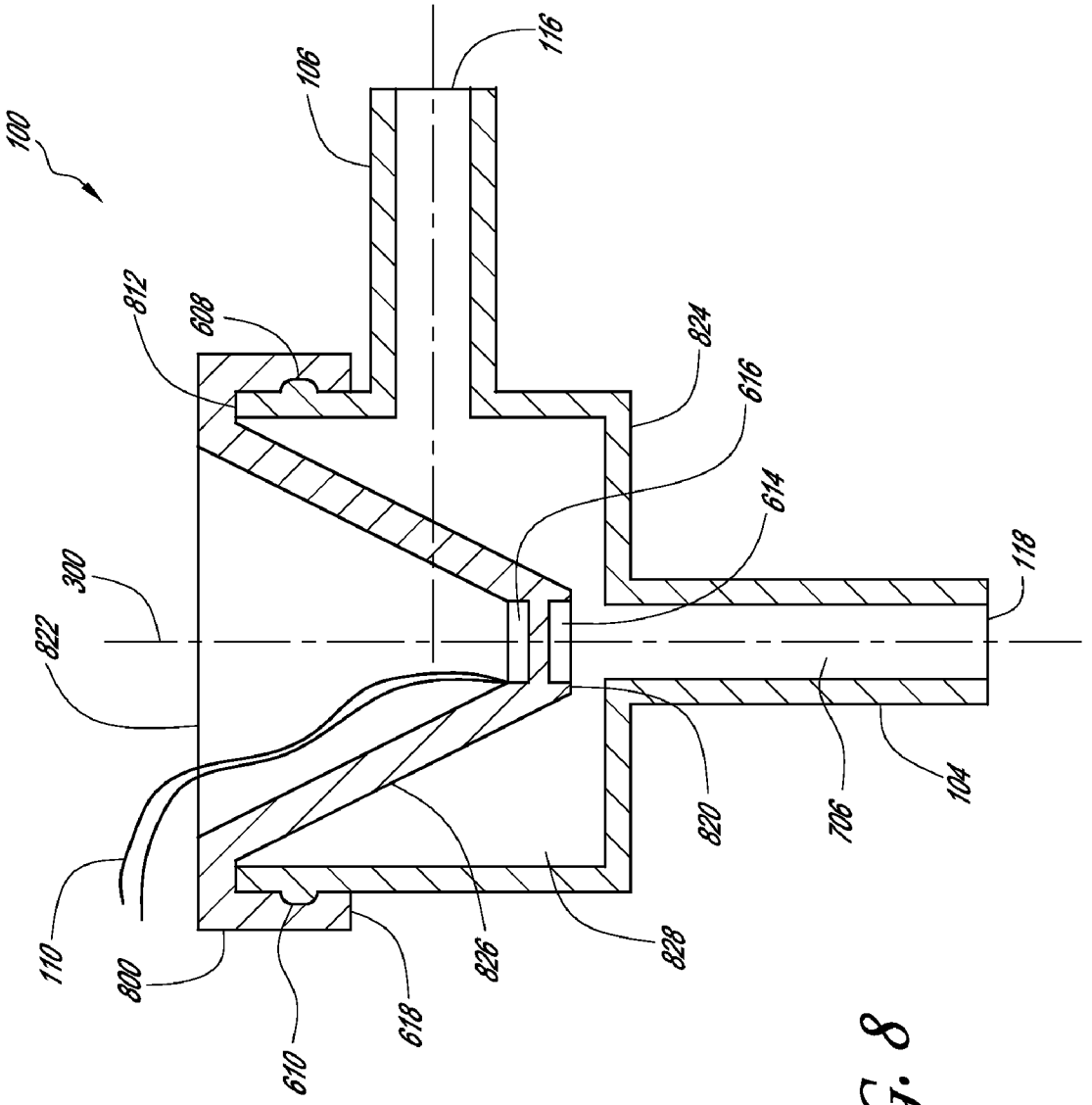
100
106
116
812
608
824
616
614
118
300
822
820
706
104
110
800
826
828
610
618

FIG. 8

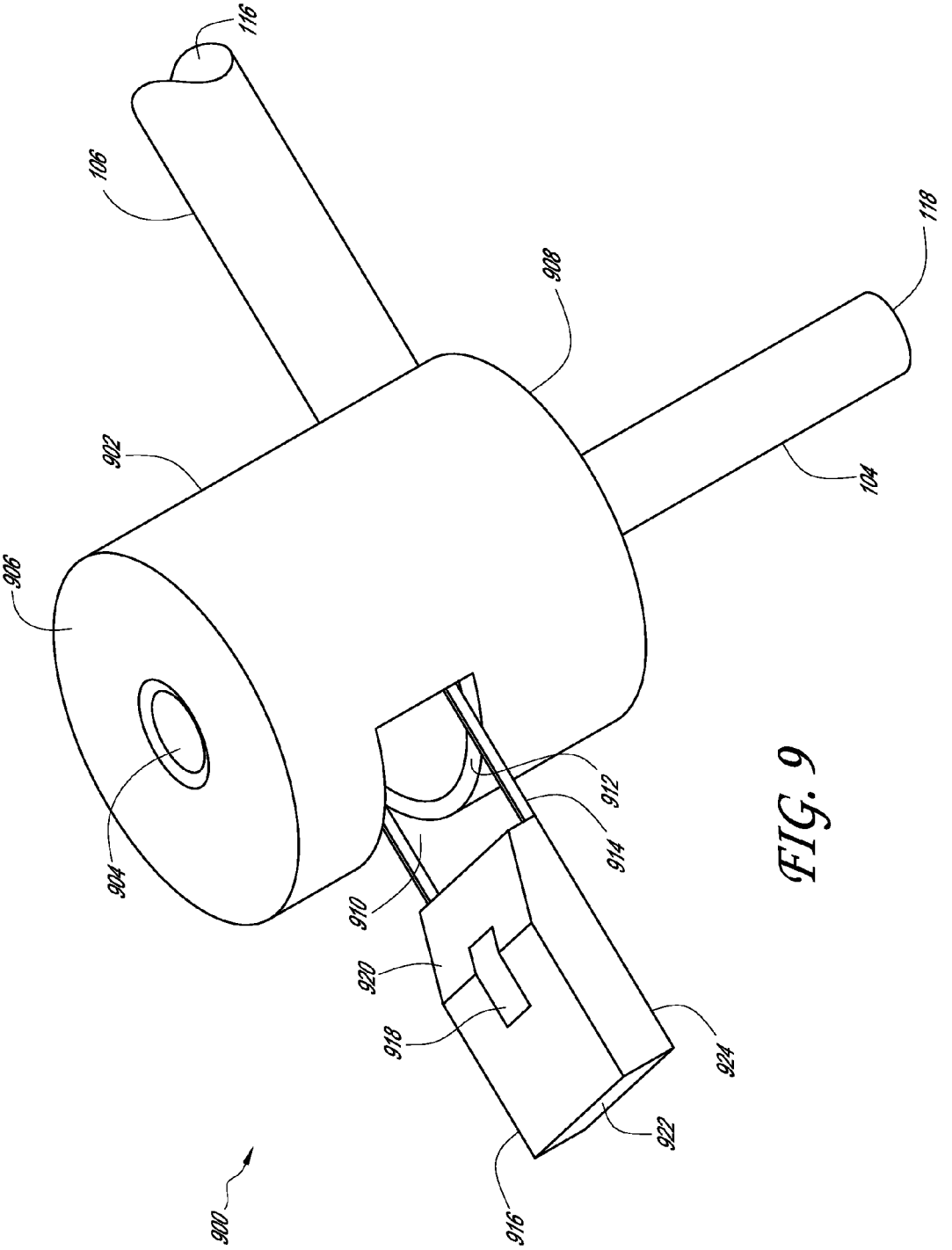
116
106
118
908
902
104
906
904
912
914
910
920
918
924
922
916
900

FIG. 9

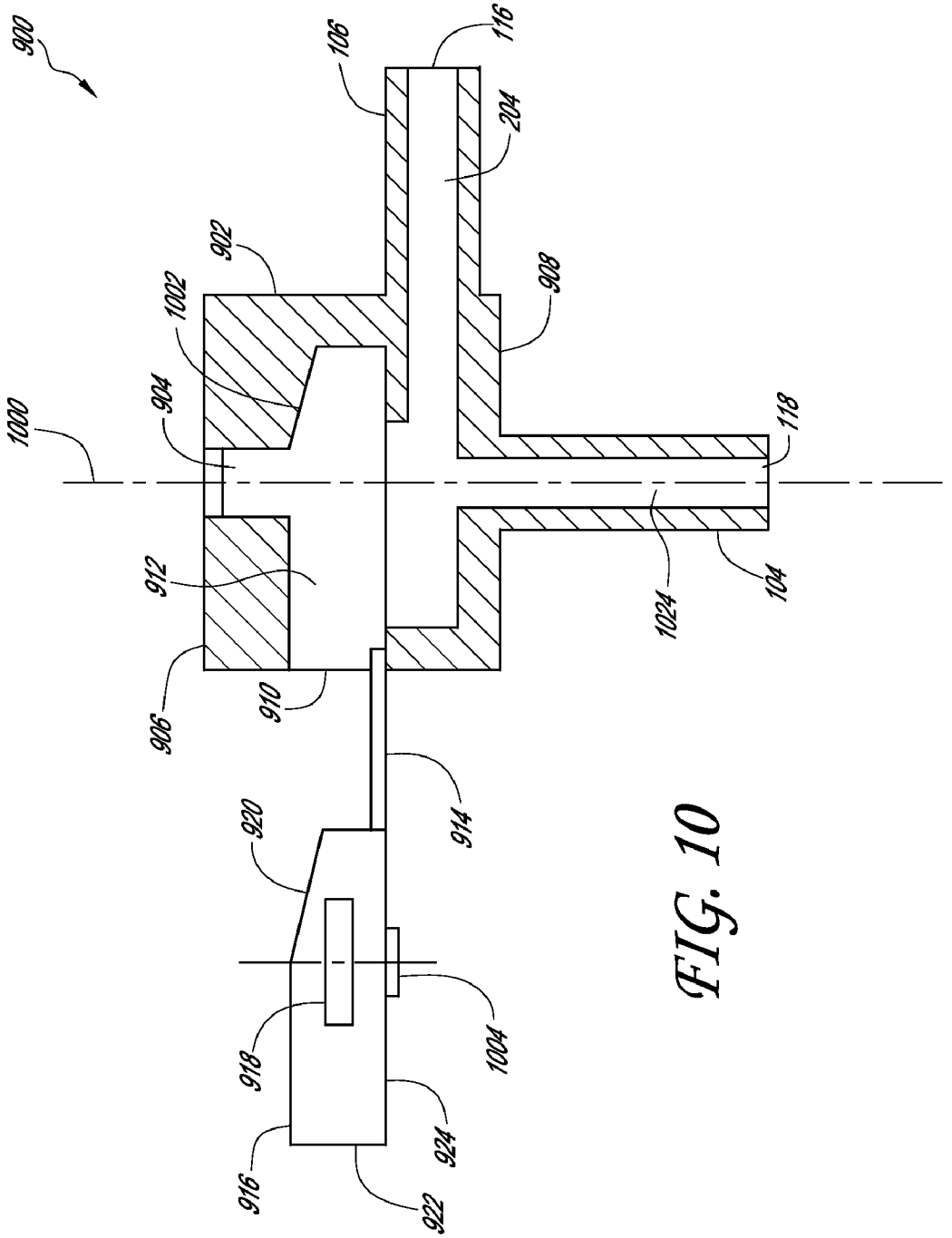
900
106
116
204
902
908
1002
904
1000
118
912
1024
104
906
910
914
920
1004
918
924
916
922

FIG. 10

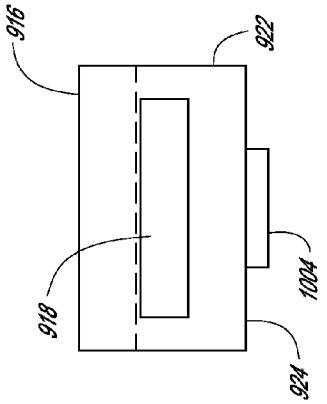

FIG. 12

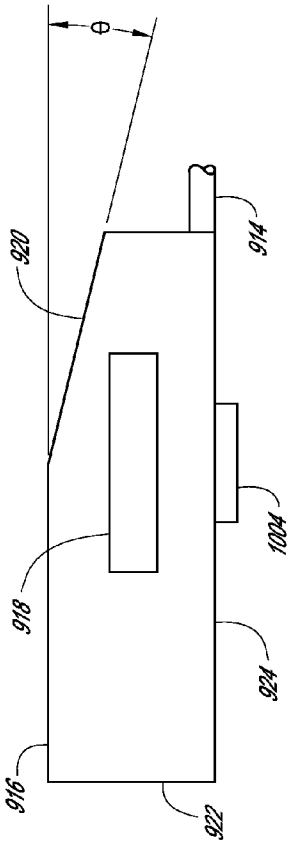

FIG. 11

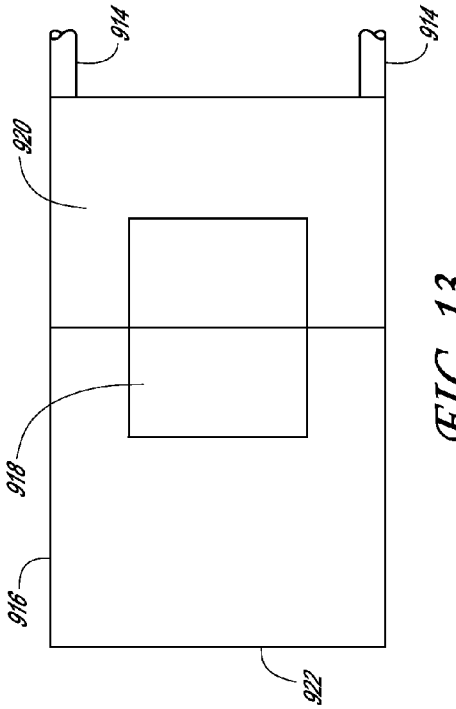

FIG. 13

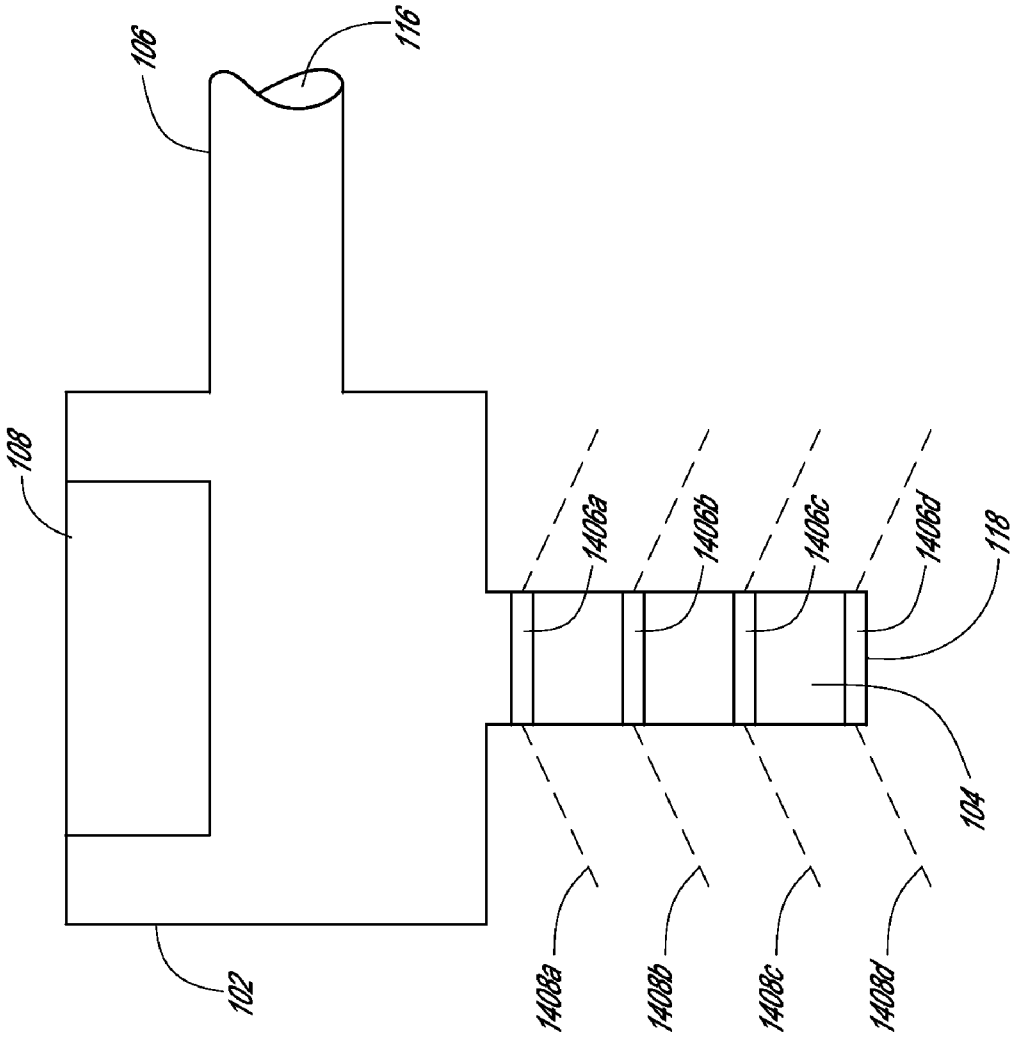
106
116
108
1406a
1406b
1406c
1406d
118
104
102
1408a
1408b
1408c
1408d

FIG. 14

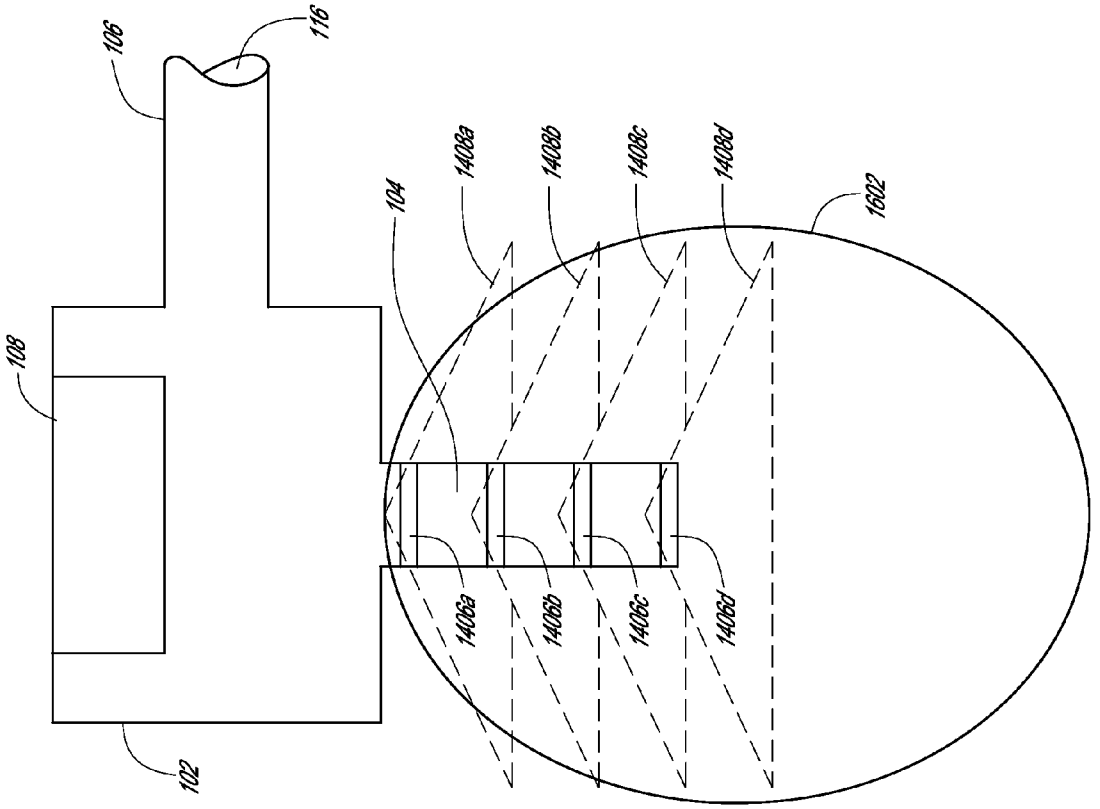
106
116
1408a
1408b
1408c
1408d
104
1602
108
1406a
1406b
1406c
1406d
102

FIG. 15

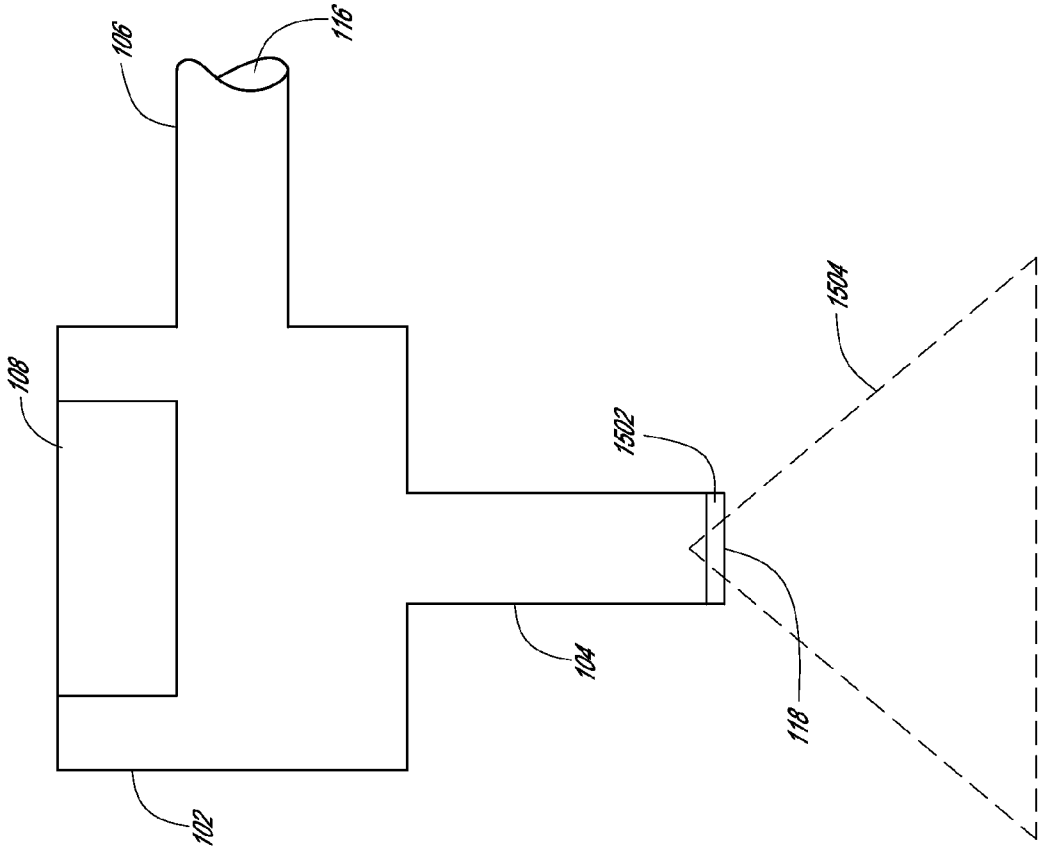

FIG. 16

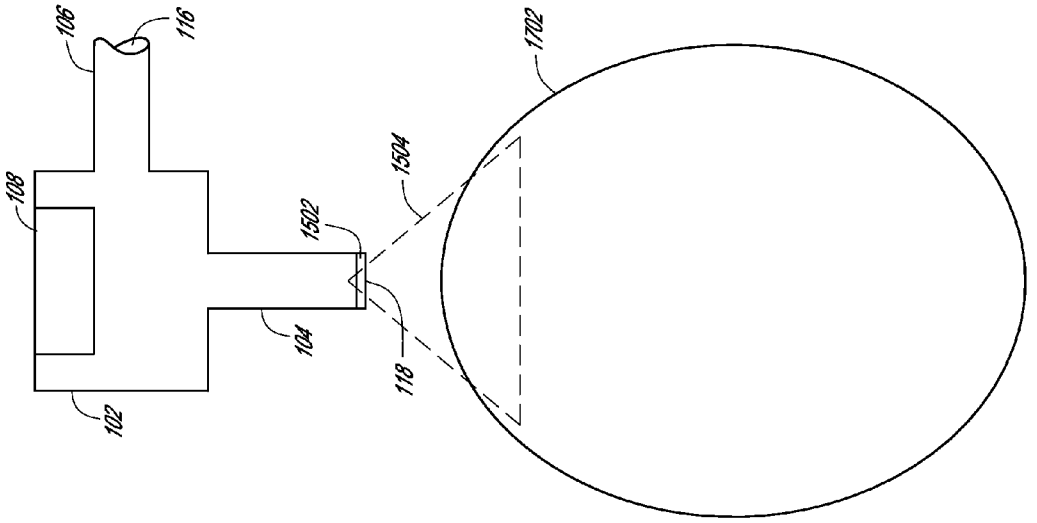

FIG. 17

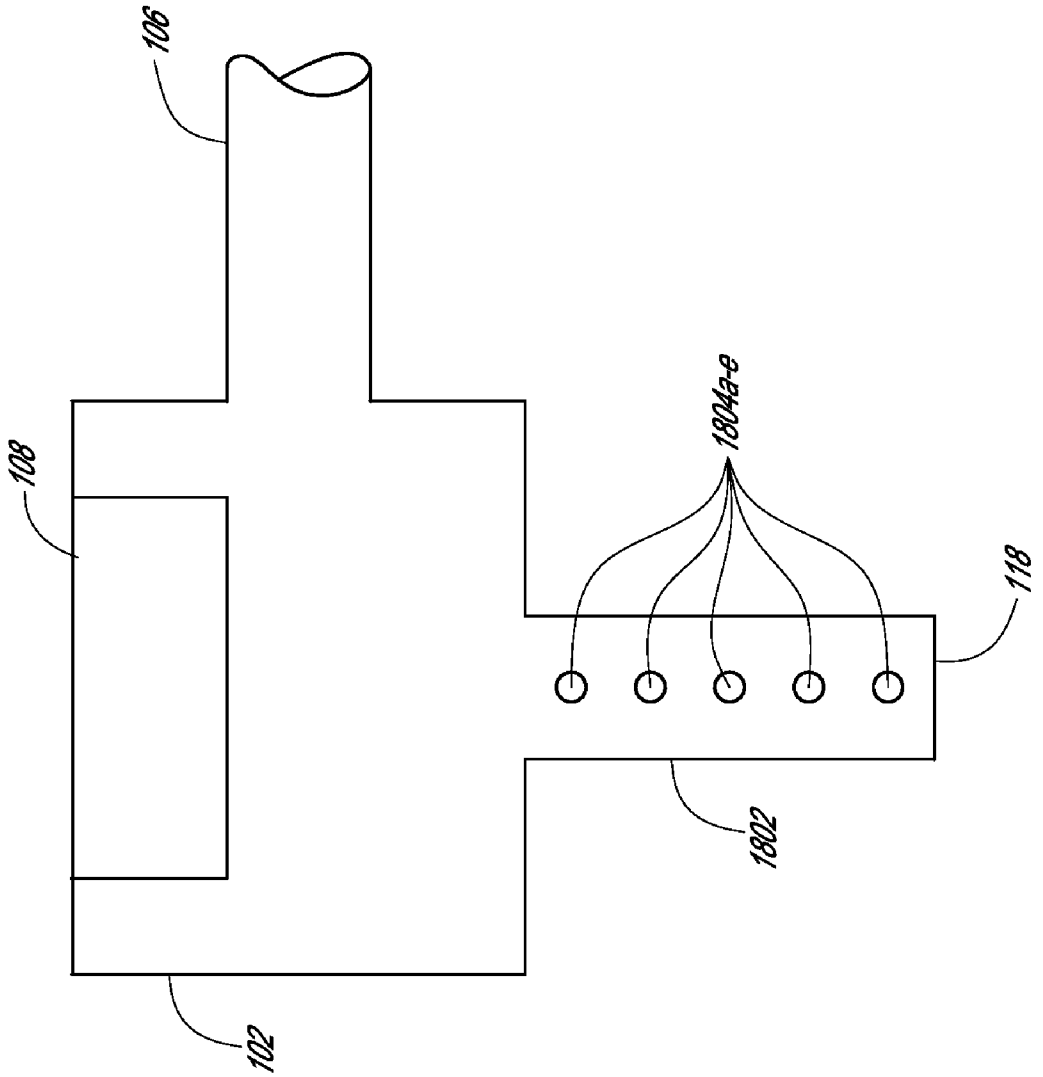

FIG. 18

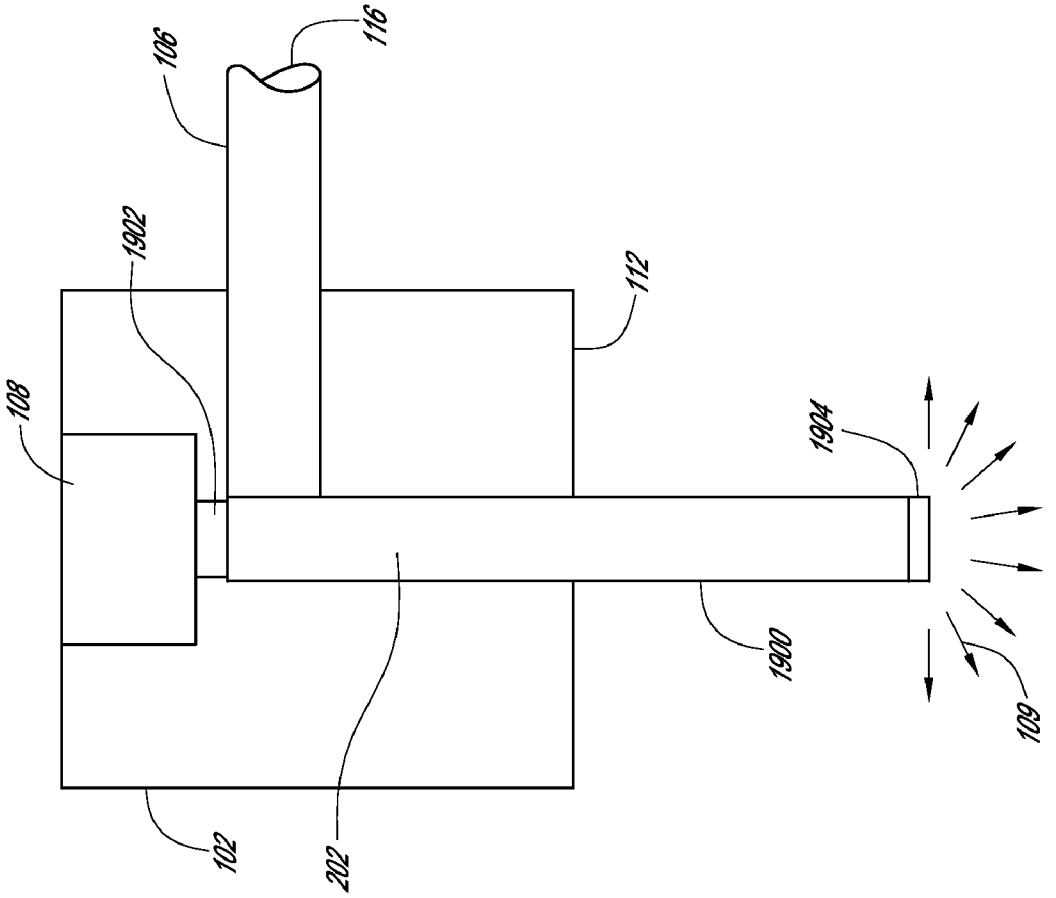

FIG. 19

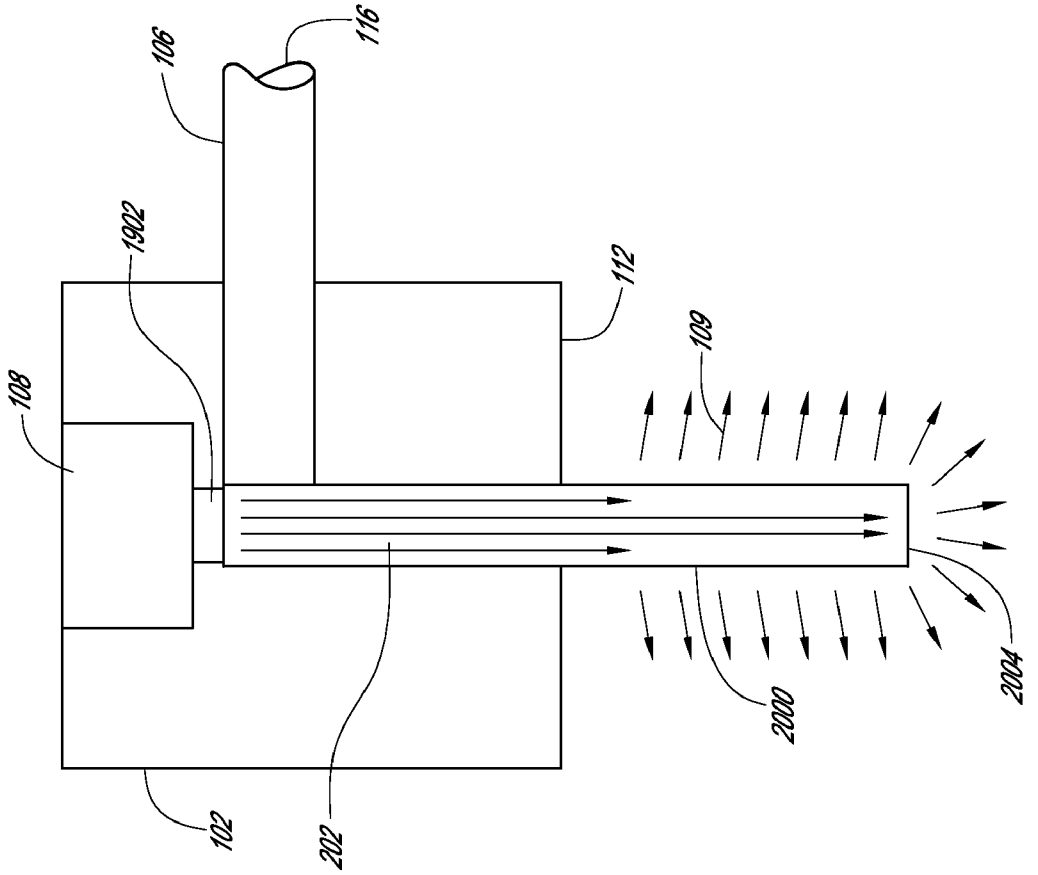

FIG. 20

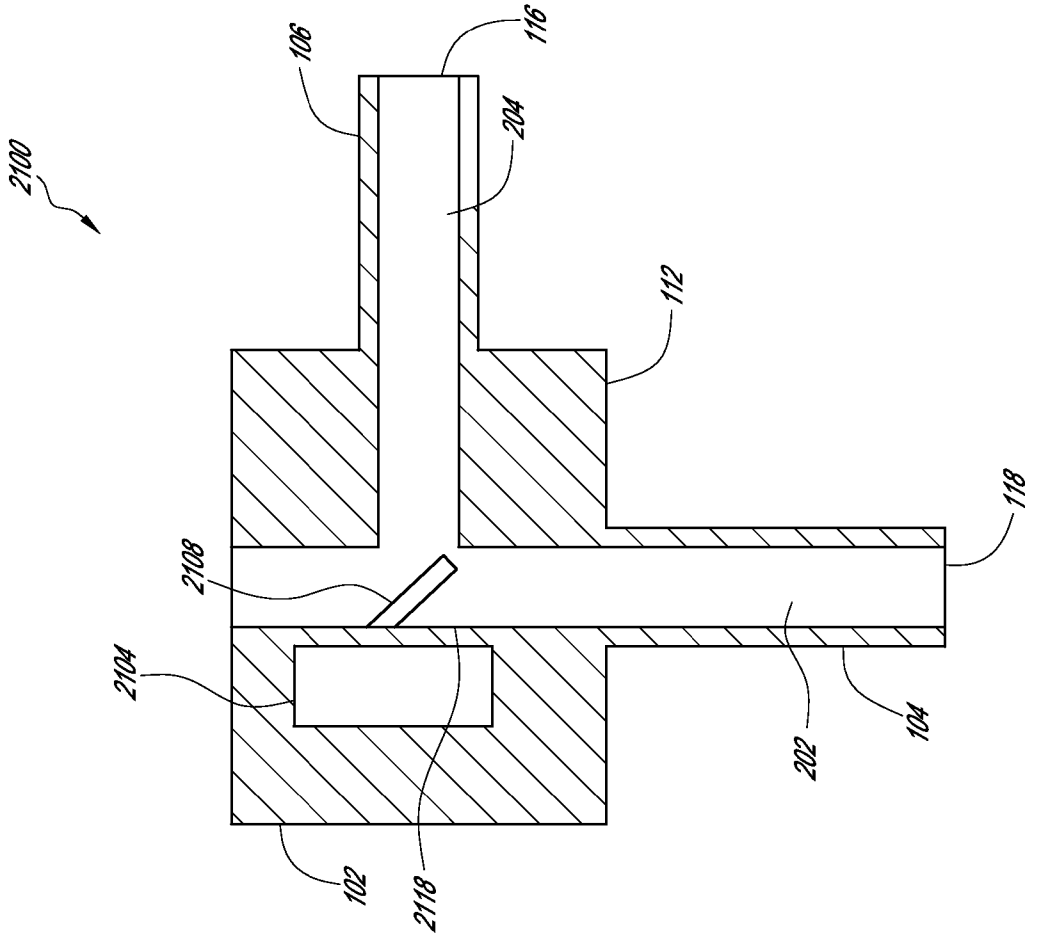

FIG. 21A

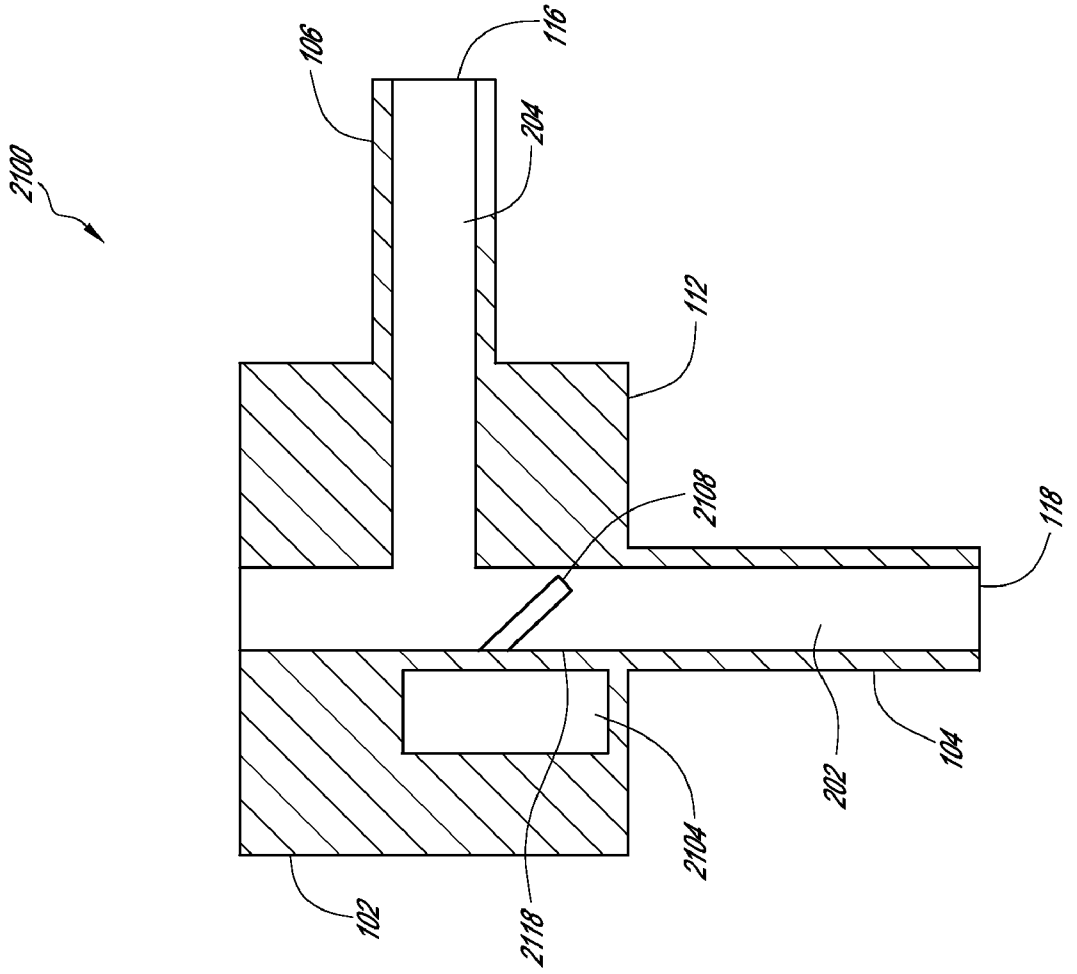

FIG. 21B

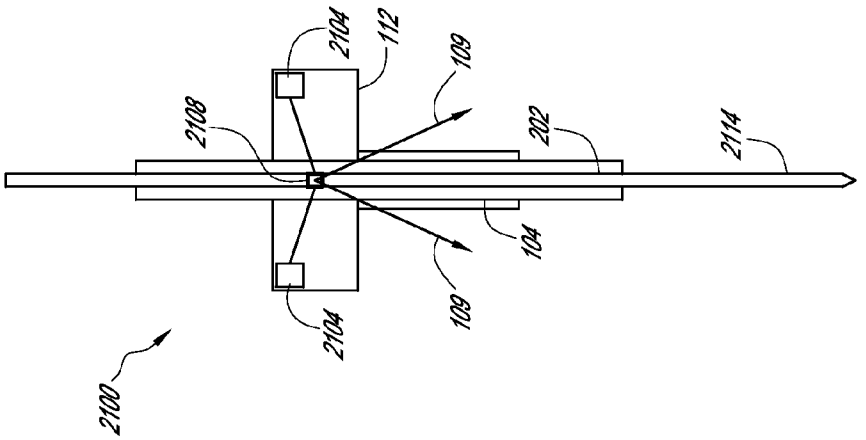

FIG. 21C

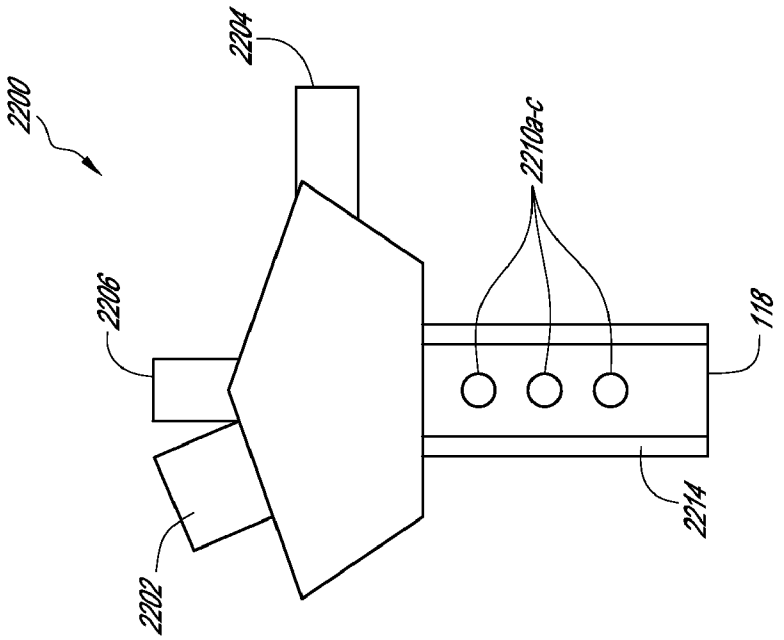

FIG. 22

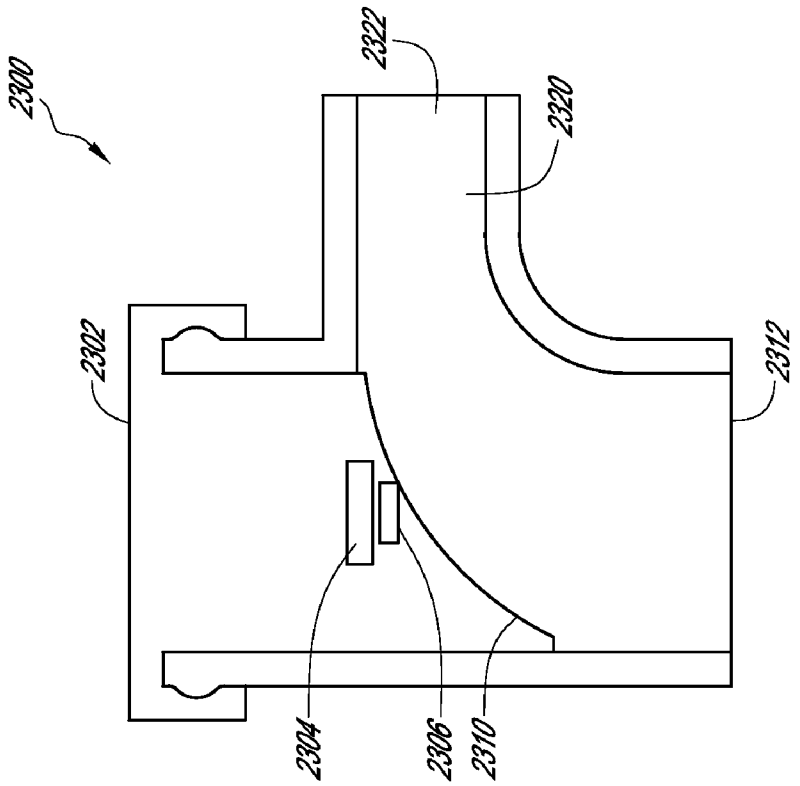

FIG. 23

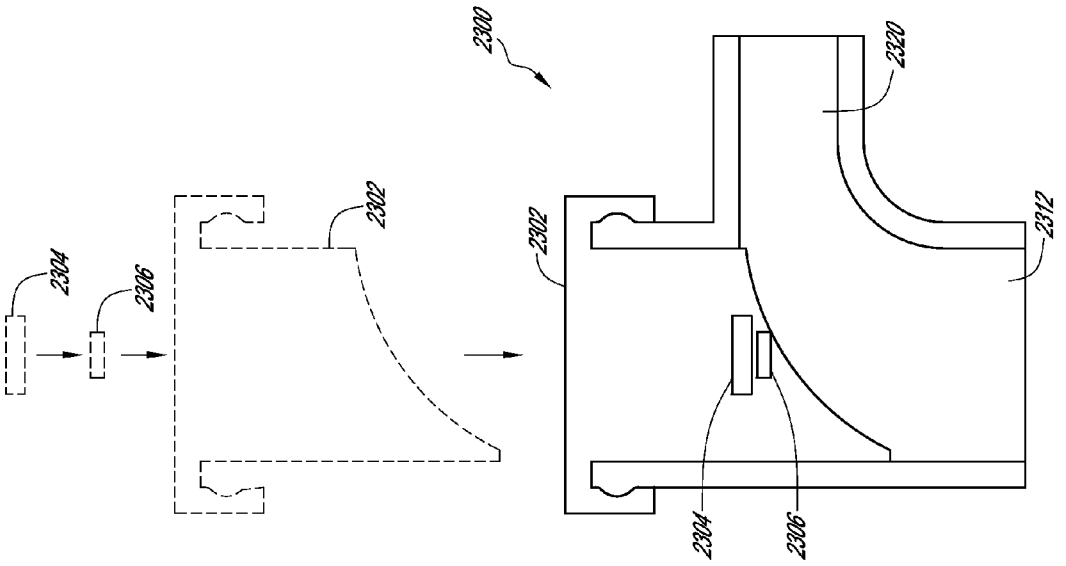

FIG. 24

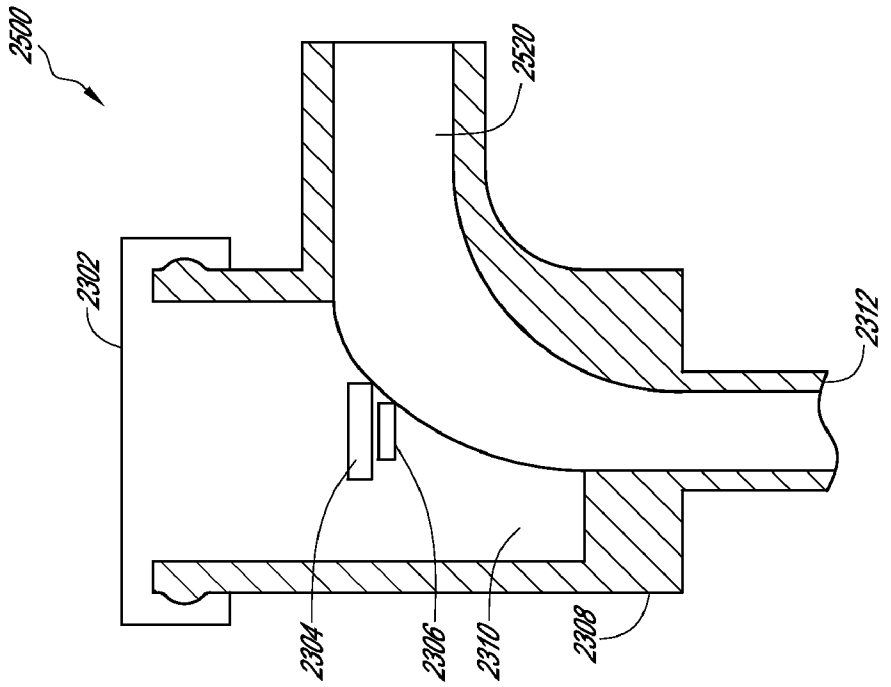

FIG. 25

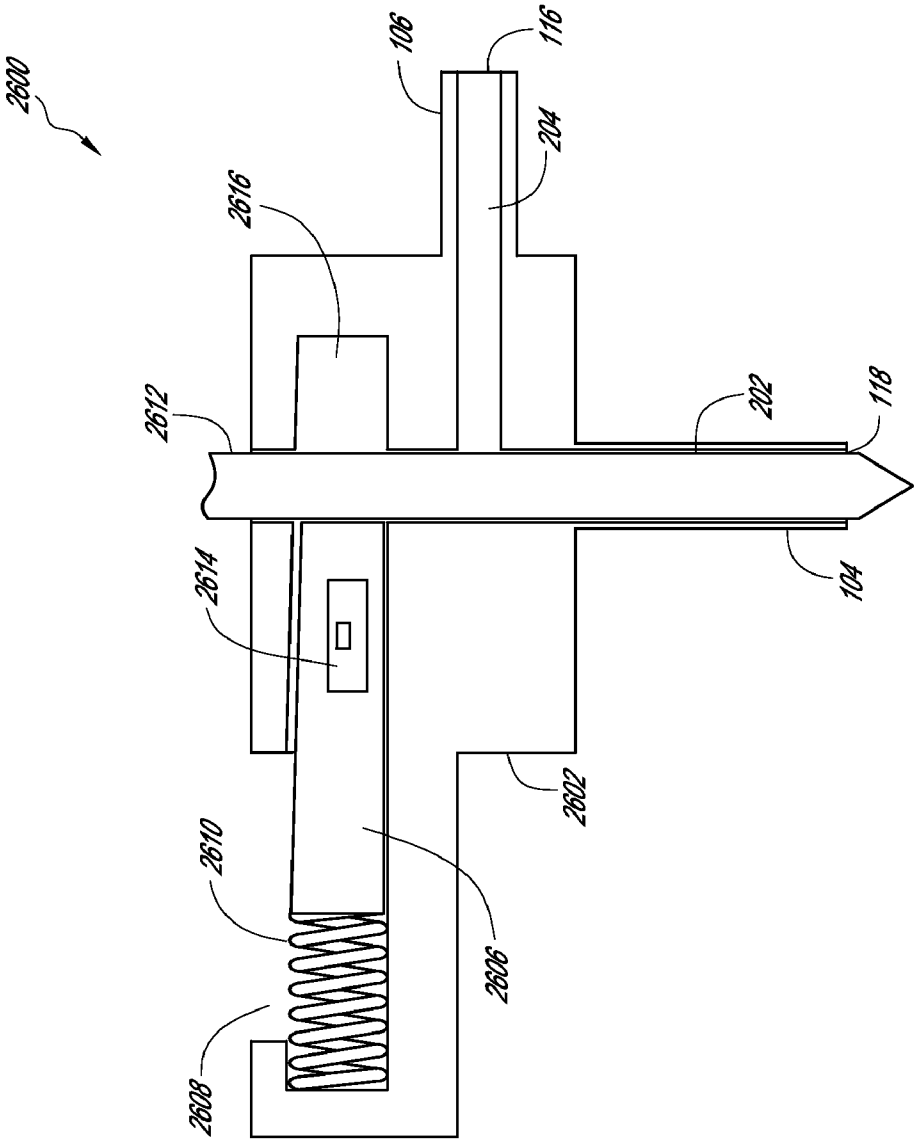
2600
106
116
204
2616
2612
202
118
104
2614
2602
2610
2606
2608

FIG. 26

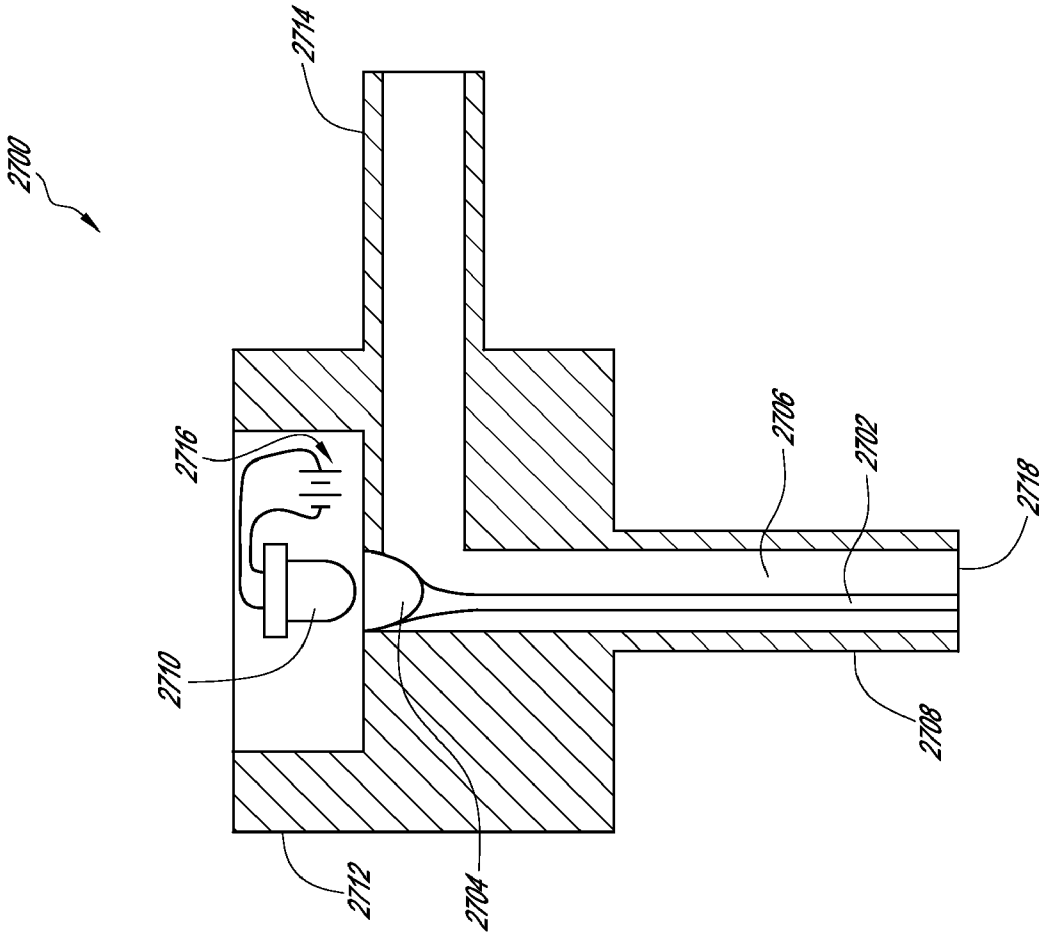

FIG. 27

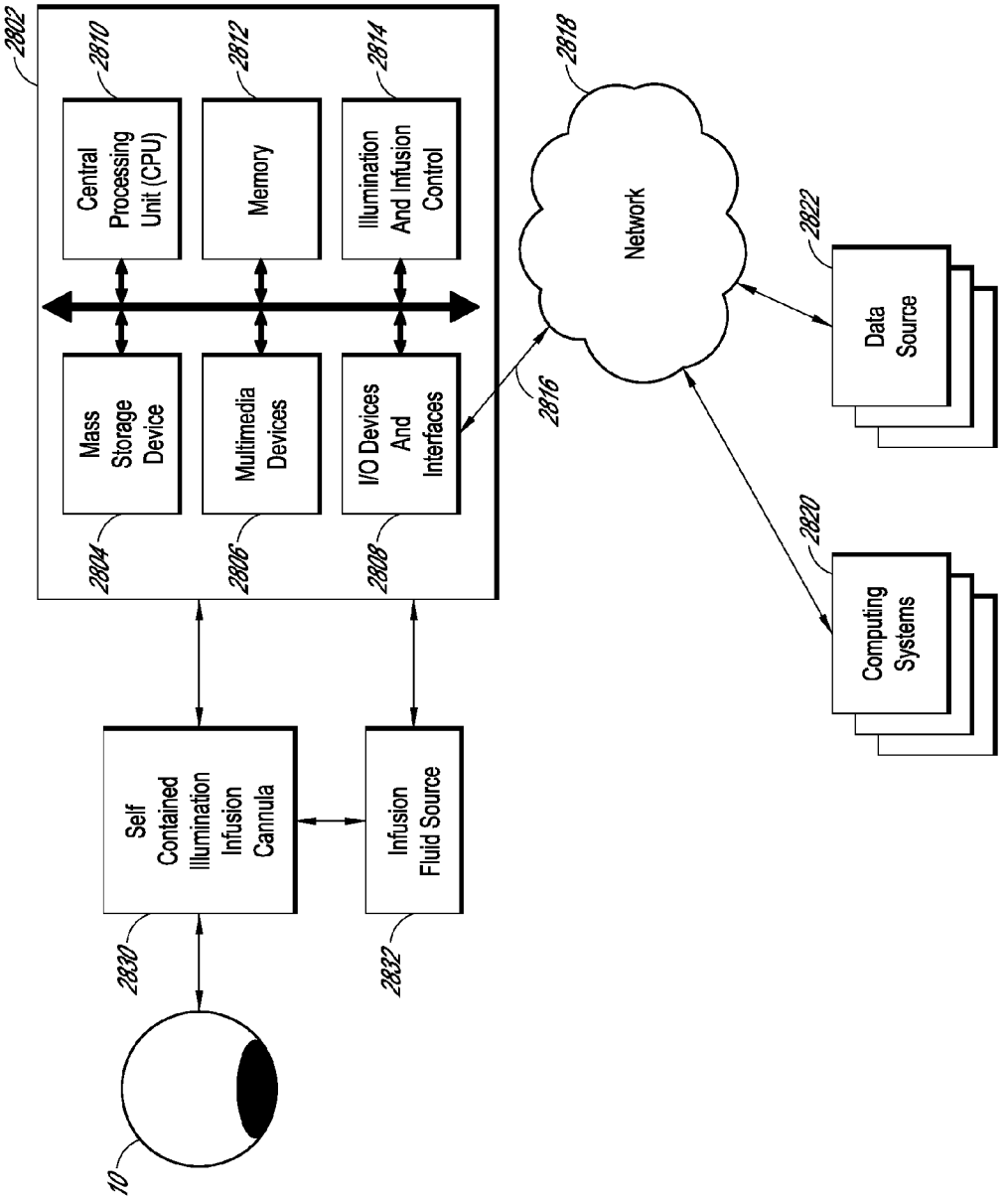
2802
2810
Central Processing Unit (CPU)
2812
Memory
2814
Illumination And Infusion Control
Mass Storage Device
Multimedia Devices
I/O Devices And Interfaces
2804
2806
2808
2816
2818
Network
2822
Data Source
2820
Computing Systems
Self Contained Illumination Infusion Cannula
Infusion Fluid Source
2830
2832
10

FIG. 28

SELF CONTAINED ILLUMINATED INFUSION CANNULA SYSTEMS AND METHODS AND DEVICES

CROSS-REFERENCE TO RELATED APPLICATIONS

[0001] This application claims the benefit of U.S. Provisional Patent Application No. 61/334,531 filed May 13, 2010, the entire contents of which are incorporated by reference herein and should be considered a part of this specification.

BACKGROUND

[0002] 1. Field of the Invention

[0003] The present invention relates generally to medical surgery, and more particularly to cannula systems and methods, and more specifically, to an illuminated cannula device.

[0004] 2. Description of the Related Art

[0005] Minimally invasive surgical procedures utilize assorted systems and methods, such as endoscopes or the like, for observing a surgical site or a wound to enable a surgeon to perform various surgical procedures. Generally, in some eye surgeries the surgical field is observed through the pupil. Various medical tools, devices, instruments, or the like are inserted into the vitreal cavity by performing a sclerotomy and/or other procedures to facilitate completion of the surgical procedure. The complexity of the ophthalmic surgery increases the duration of surgery and increases the number of support personnel required to assist the surgeon. Surgical procedure complexity is influenced by instrumentation introduced through various ports created by performing sclerotomies that are controlled by the surgeon. For example, generally, three ports can be created during a posterior operative surgical procedure, although additional or fewer ports can be created as necessary. The multiple ports provide various functions for the surgical procedure. For example, the multiple ports maintain the intraocular pressure through fluid infusion of a fluid, air, oil, or gas, illuminate the interior of the eye via a light source, and provide a controlled access channel for inserting surgical instruments, devices, or the like.

SUMMARY

[0006] The systems and methods disclosed herein are related to an illuminated infusion cannula for internally illuminating biological tissue, organs, body lumens, and/or body cavities to enable a surgeon to perform various orthopedic surgeries, neurosurgeries, and/or other surgical procedure. Various embodiments of the present disclosure can also relate generally to an illuminated cannula device for internally illuminating an eye to enable a surgeon to perform various surgical procedures in, on, around, and/or near the eye.

[0007] In accordance with one embodiment, the present disclosure provides a medical treatment system having a self-contained illuminated infusion cannula system, including a light source, such as a light emitting diode or an organic light emitting diode light source, located in the cannula device, and transmitting light and infusion fluid through the same cannula into the surgical site within the eyeball.

[0008] A cannula system can include a body, a light source contained within the body, an infusion port and a cannula. The infusion port can be formed in the body for receiving fluids to be delivered to a surgical site. The cannula can also be formed with the body. The cannula can have a lumen for delivering the fluids received through the infusion port and for transmitting light from the light source. In some embodiments, the system can include one or more lens or other optical elements. Some embodiments may also or alternatively include a trocar sized to pass through the cannula.

[0009] Another embodiment of a cannula system can comprise a housing element having a lumen and a port configured to provide a flow of fluid to the lumen and a light emitting diode light source. The light source can be positionable within the housing element and configured to direct light through the lumen when disposed within the housing element. The lumen can be transparent and configured to permit light to pass through the lumen from the light emitting diode light source to a surgical site. The lumen can also be configured to direct fluid to the surgical site.

[0010] A cannula system can have a body, an insert and an elongate member. The body can have a proximal portion and a distal portion, a first lumen extending between the proximal portion and the distal portion, and a port coupled to a second lumen. The second lumen can communicate with the first lumen. The body can also have a first aperture extending to the first lumen at the proximal portion. The insert element can have a light source positionable within the first aperture to permit light from the light source to pass through the first lumen. The elongate member can be transparent and can have a first portion and a second portion with a third lumen extending through the elongate member from the first portion to the second portion. The first portion of the elongate member can be coupled to the distal portion of the first lumen. The transparent member third lumen can permit light to pass from the light source to a surgical site and be capable of fluid communication with the port, the first lumen, and the second lumen.

[0011] In accordance with another embodiment the present disclosure provides a cannula comprising a housing element having a distal portion and a proximal portion, a first lumen extending between the proximal portion and the distal portion, and a port capable of fluid communication with the first lumen. A light emitting diode light source can be removably positionable within the housing element. The light emitting diode light source is configured to direct light through the first lumen when disposed within the housing. The light emitting diode light source comprises at least a red light emitting diode, a blue light emitting diode, and a yellow light emitting diode. The embodiment further includes a transparent second lumen having a first portion and a second portion. The first portion is coupled to the distal portion of the first lumen, and the transparent second lumen is configured to permit light to pass through from the light emitting diode light source to a surgical site. The embodiment additionally includes the transparent second lumen being configured to receive fluid from the first lumen. The diameter of the transparent second lumen is 20 gauge or smaller.

[0012] In accordance with another embodiment the present disclosure provides a cannula comprising a housing element having a distal portion and a proximal portion, a first lumen extending between the proximal portion and the distal portion, and a port capable of fluid communication with the first lumen. A light emitting diode light source can be removably positionable within the housing element. The light emitting diode light source is configured to direct light through the first lumen when disposed within the housing. The light emitting diode light source comprises at least a red light emitting diode, a blue light emitting diode, and a yellow light emitting diode. The embodiment further includes a transparent second lumen having a first portion and a second portion. The first

portion is coupled to the distal portion of the first lumen, and the transparent second lumen is configured to permit light to pass through from the light emitting diode light source to a surgical site. The embodiment additionally includes the transparent second lumen being configured to receive fluid from the first lumen.

[0013] In accordance with another embodiment the present disclosure provides a cannula system comprising a body having a distal portion and a proximal portion, with a first lumen extending between the proximal portion and the distal portion and a periphery surface extending between the proximal portion and the distal portion. The embodiment further includes a port coupled to a second lumen. The second lumen communicating with the first lumen, and a first aperture extending to the first lumen. The embodiment can additionally include an insert element comprising a light emitting diode light source positionable within the first aperture to permit light from the light emitting diode light source to pass through the first lumen. The embodiment still further includes an elongate transparent member, having a first portion and a second portion, wherein a third lumen can extend through the elongate member from the first portion to the second portion, and the first portion is coupled to the distal portion of the first lumen. The transparent member third lumen can be configured to permit light to pass from the light emitting diode light source to a surgical site, and the transparent member third lumen can be capable of fluid communication with the port and the first lumen and the second lumen.

[0014] In accordance with another embodiment, the present disclosure provides a method of treating an eye. The method includes providing a cannula comprising a body having a first lumen therein, and an elongate member extending from a distal portion of the body, the elongate member having a second lumen substantially coaxial with the first lumen, the first and second lumen capable of fluid communication with a fluid source, and an insert having a light emitting diode light source, the insert positionable through a first aperture to permit light to pass through the first lumen and the second lumen. The embodiment further includes projecting an incision instrument through the first and second lumen with the insert removed to allow passage of the instrument. The embodiment additionally includes creating an incision in the eye tissue by penetrating the tissue with a sharp distal end of the incision instrument. The embodiment still further includes inserting the elongate member through the incision to position a distal portion of the elongate member such that the distal portion lies within the eye with the distal surface of the body adjacent the outer surface of the eye. The embodiment additionally includes removing the incision instrument from the transparent elongate member and the body, and positioning the insert adjacent the first lumen to permit light to pass from the light emitting diode through at least a portion of the second lumen. The embodiment still further includes illuminating the internal portion of the eye by permitting light to pass through the transparent elongate member and dispersing the light within the eye, and irrigating the interior of the eye with fluid delivered through the transparent elongate member, the fluid exiting from at least a portion of the transparent elongate member.

[0015] For purposes of this summary, certain aspects, advantages, and novel features of the invention are described herein. It is to be understood that not necessarily all such advantages may be achieved in accordance with any particular embodiment of the invention. Thus, for example, those skilled in the art will recognize that the invention may be embodied or carried out in a manner that achieves one advantage or group of advantages as taught herein without necessarily achieving other advantages as may be taught or suggested herein.

BRIEF DESCRIPTION OF THE DRAWINGS

[0016] The foregoing and other features, aspects and advantages of the invention are described in detail below with reference to the drawings of various embodiments, which are intended to illustrate and not to limit the invention. The drawings comprise the following figures in which:

[0017] FIG. **1** is a side view of a self-contained illuminated infusion cannula system, in accordance with an embodiment inserted into the eyeball.

[0018] FIG. **2** is a perspective view of the self-contained illuminated infusion cannula system of FIG. **1**.

[0019] FIG. **3** is a cross-section view of the self-contained illuminated infusion cannula system of FIG. **1**.

[0020] FIG. **4** is a side view of an embodiment of a self-contained illuminated infusion cannula system.

[0021] FIG. **5** is a side view of an embodiment of a self-contained illuminated infusion cannula system.

[0022] FIG. **6** is a side view of an embodiment of a self-contained illuminated infusion cannula system.

[0023] FIG. **7**A is a side view of an embodiment of a self-contained illuminated infusion cannula system.

[0024] FIG. **7**B is a side view of an embodiment of a self-contained illuminated infusion cannula system.

[0025] FIG. **8** is a side view of an embodiment of a self-contained illuminated infusion cannula system.

[0026] FIG. **9** is a perspective view of an embodiment of a self-contained illuminated infusion cannula system.

[0027] FIG. **10** is a cross-section side view of the self-contained illuminated infusion cannula system of FIG. **9**.

[0028] FIG. **11** is a side view of an insert portion of the self-contained illuminated infusion cannula system of FIG. **9**.

[0029] FIG. **12** is a front view of an insert portion of the self-contained illuminated infusion cannula system of FIG. **9**.

[0030] FIG. **13** is a top view of an insert portion of the self-contained illuminated infusion cannula system of FIG. **9**.

[0031] FIG. **14** is a side view of an embodiment of a self-contained illuminated infusion cannula system.

[0032] FIG. **15** is a side view of the self-contained illuminated infusion cannula system of FIG. **14** showing an improved field of view.

[0033] FIG. **16** is a side view of an embodiment of a self-contained illuminated infusion cannula system.

[0034] FIG. **17** is a side view of the self-contained illuminated infusion cannula system of FIG. **16** showing a reduced field of view.

[0035] FIG. **18** is a side view of an embodiment of a self-contained illuminated infusion cannula system.

[0036] FIG. **19** is a side view of an embodiment of a self-contained illuminated infusion cannula system.

[0037] FIG. **20** is a side view of an embodiment of a self-contained illuminated infusion cannula system.

[0038] FIG. **21**A is a side view of an embodiment of a self-contained illuminated infusion cannula system.

[0039] FIG. **21**B is a side view of an embodiment of a self-contained illuminated infusion cannula system.

[0040] FIG. **21**C is a side view of an embodiment of a self-contained illuminated infusion cannula system.

[0041] FIG. **22** is a side view of an embodiment of a self-contained illuminated infusion cannula system.

[0042] FIG. **23** is a side view of an embodiment of a self-contained illuminated infusion cannula system.

[0043] FIG. **24** is a side view of the self-contained illuminated infusion cannula system of FIG. **23**.

[0044] FIG. **25** is a side view of an embodiment of a self-contained illuminated infusion cannula system.

[0045] FIG. **26** is a side view of an embodiment of a self-contained illuminated infusion cannula system.

[0046] FIG. **27** is a side view of an embodiment of a self-contained illuminated infusion cannula system.

[0047] FIG. **28** shows a schematic view of an embodiment of a self-contained illuminated infusion cannula system and other components.

DETAILED DESCRIPTION OF PREFERRED EMBODIMENTS

[0048] The efficiency and comfort of the surgeon during a surgical procedure can be increased with a reduction in the quantity and/or mass of the various instruments controlled by the surgeon. Thus, it is desired to reduce the number of instruments inserted into the eye during ophthalmic surgery. Challenges of known infusion and/or fiber-optic light cannulas include obtaining sufficient illumination of the inside of the eyeball at the surgical site, the need for support personnel to assist the surgeon in handling the numerous instruments, and the fatigue incurred by the surgeon while handling the appurtenant illumination and infusion instrumentation connected to the surgical control panel. Additional issues arise with the heat emitted from the light source of fiber-optic systems, the short operating life of the light sources, and the fragility of the fiber optics of such systems.

[0049] Accordingly, there is a need in the art for an improved illumination infusion cannula device or system that solves some of the disadvantages discussed above. Particularly, there is a need for a self-contained illuminated infusion cannula system that reduces the efforts and attention a surgeon needs to direct to the illumination of the surgical site during a surgical procedure, and increases the transmittance of light to the surgical site within the eyeball. Further, a need exists for an improved illumination device that provides greater durability and reliability than currently available fiber-optic light sources.

[0050] The associated drawings and specification discuss aspects and features of the disclosure in the context of several different embodiments of illuminated infusion cannula devices and methods that are configured for use in surgical procedures, in particular ophthalmic surgery. Discussing these features in connection with ophthalmic surgery provides for clarity and consistency in presenting these inventive features and concepts. However, it is to be understood that the features and concepts discussed herein can be applied to surgical methods other than ophthalmic procedures.

[0051] With reference to FIG. **1**, a side view of a self-contained illuminated infusion cannula system **100** inserted through the sclera **14** of the eyeball **10**, adjacent or near the pupil **12**, is shown. The cannula system **100** may operate to provide a wide-angle field of illumination to allow a surgeon to view as large of a portion of the retina and other eye features. In particular, the system **100** can allow the surgeon to visualize the anatomical structures at the posterior portion of the eye, such as other features of the fundus, e.g. blood vessels, the optic nerve, the choroid, and the like.

[0052] The self-contained illuminated infusion cannula system **100** can generally include a body **102**, an elongate member or cannula **104**, a conduit **106**, and a light source **108**. The cannula system **100** can further include a power source **110**, an infusion port **116**, and an outlet **118**. The body or housing **102**, can receive infusion fluid **119** through the infusion port **116** at a distal end of the conduit **106** and light transmittance **109** from the light source **108**. The body **102** can direct fluid and permit the light to pass out the outlet **118** of the cannula **104**.

[0053] The light source **108** can generate light and can be in the form of, for example, one or more of a light emitting diode (LED), an organic light emitting diode (OLED), a light bulb, or a lamp. The light source **108** contained in the infusion cannula system **100** provides certain benefits over currently available fiber optic systems, such as not being tethered to a separate light source to generate the light directed down the fiber optic. Thus, the light source **108** allows for a self-contained system where the light source **108** can be contained within the body **102** of the system **100**.

[0054] The infusion port **116** can be coupled to a fluid source **120** to provide a fluid inlet flow of infusion fluid. The fluid source **120** can be part of, for example, a remote console, or control, system that is not shown. The conduit **106** can extend from the infusion port **116** at one end to the body **102** at the other end. The cannula **104** can extend from a distal end **112** of the body **102** to the outlet **118** at a distal end of the cannula **104**. The cannula outlet **118** can establish the furthest point, or location, of entry within the tissue, or eyeball as shown in FIG. **1**, at a surgical site **16**.

[0055] With reference to FIGS. **1-5**, the illuminated infusion cannula system **100** can function to provide a combination of infusion fluid **119** and light **109** to the surgical site **16** during ophthalmic surgery. The infusion fluid **119** can be provided by a remote fluid source **120** that can deliver the fluid inlet flow via a flexible tube, not shown, for example, to the infusion port **116**. The flexible tube can generally be biologically compatible to prevent detrimental contamination of the eye and associated tissue, e.g., silicone or the like. In an embodiment, the infusion fluid **119** can be a saline fluid to maintain the intraocular pressure and irrigate the surgical site. In an embodiment, the infusion fluid **119** can be a treatment fluid to treat the eye, or an anatomical feature of the surgical site, or an adjacent region of the anatomy.

[0056] With continued reference to FIGS. **1-5**, the infusion port **116** can be coupled to the conduit **106**, which in turn is coupled to the body **102**. The body **102** can include a distal end or surface **112** that can be placed adjacent the outer surface of the eye **10**. The distal end **112** can provide a support surface for the cannula system such that the cannula can be self-supported, avoiding the need for continuous handling by a surgeon or other surgical personnel for the duration of the surgical procedure. The distal end **112** can generally rest adjacent and/or on the sclera, or the outer surface of the eye, such that the LED **108** light source is between about 0.015 inches and about 0.050 inches from the outer surface of the sclera, more preferably between about 0.020 inches and about 0.040 inches. The body can further include a proximal end or surface **114** which generally opposes the distal end **112** and, in an embodiment, can generally define the outermost proximal surface of the contiguous cannula system.

[0057] In the illustrated embodiments of FIGS. **1-5**, the body **102** can include several internal geometric features or characteristics that facilitate the transmittal of light **109** and the delivery of the infusion fluid **119** to the eye **10**. The body **102** can include flow passages or lumens, for example, a first

lumen **202**, a second lumen **204**, a chamber **302**, and a centerline axis **300** (FIG. **3**). The body **102** can further include light source related features, for example, an LED cavity **107** and a lens **304** (FIG. **3-5**).

[0058] Internal to the body **102**, the first lumen **202** can define a generally circular cross-sectional passageway extending from the proximal most portion of the cannula system **100** to the distal most portion of the cannula system **100**. Thus, the first lumen **202** can extend through the body **102** and the cannula **104**. The first lumen **202** can generally be concentric with the centerline axis **300**. The infusion fluid **119** provided via the second lumen **204**, flows through the first lumen **202**; hence the first lumen **202** is a common lumen for delivering infusion fluid **119** and transmitting light **109** of the LED **108** through the cannula **104**. In an embodiment, the first lumen **202** can include a cross-sectional passageway that can be any geometric shape, for example, polygonal, oval, triangular, rectangular, or the like.

[0059] The first lumen **202** can provide an additional capability, which is that of an accessway for an incision instrument, not shown, from the proximal surface **114** to the outlet **118** of the cannula **104**. The incision instrument or trocar can include a sharp distal tip that can facilitate cutting or puncturing the sclera **14** of the eye **10**. The cannula **104** can pass through this incision into the vitreous cavity of the eye **10**. The first lumen **202** can allow the trocar to be inserted through the cannula system **100**, create the incision, and be removed from the cannula system **100** upon insertion of the cannula **104** into the eye **10**. As described below in detail, the insertion of an independent trocar through the first lumen **202** may require access through the LED cavity **107**. Thus, the LED **108** and any optical elements can be removed, or moved aside, prior to trocar insertion, then installed or inserted into the cannula system **100** after the cannula **104** is inserted into the eye **10**.

[0060] The second lumen **204** can define a generally circular cross-sectional passageway extending from the infusion port **116**, through the conduit **106**, and meeting the first lumen **202** at a junction adjacent the centerline axis **300**. The second lumen **204** can provide the passageway to deliver the infusion fluid **119** from the fluid source **120** into the first lumen **202**, whereupon the fluid can provide a light transmittance medium for the light **109** emitted by the LED **108**. The second lumen **204** and the conduit **106** can be sized to receive, or couple to, the fluid source tubing, not shown.

[0061] The fluid source tubing can generally have an internal diameter of between about 0.030 inches and about 0.125 inches, more preferably between about 0.050 inches and about 0.070 inches. Accordingly, the infusion port **116** can be sized to receive the tubing within the infusion port **116** internal diameter, or more preferably, to be received within the tubing internal diameter, thus having the tubing fit over the infusion port outer diameter. The second lumen **204** cross-section can generally have a diameter of between about 0.030 inches and about 0.125 inches, more preferably between about 0.050 inches and about 0.070 inches, as well. In an embodiment, the first lumen **202** can include a cross-sectional passageway that can be any geometric shape, for example, polygonal, oval, triangular, rectangular, or the like.

[0062] With reference to FIGS. **2-5**, cross-section views of several embodiments of the cannula system **100** with various embodiments of a chamber located internal to the body **102** are shown. The body **102** can have the chamber **302** that can define the hollow volume where the first lumen **202** joins the second lumen **204**. The chamber **302** can define the region where the flow of infusion fluid **119** changes direction from that of the second lumen **204** to the direction of the first lumen **202**. Thus, the chamber **302** is a selective portion of the first lumen **202**, and to a lesser degree, of the second lumen **204**.

[0063] In the illustrated embodiment of FIG. **3**, the infusion fluid **119** flows through an approximately 90 degree bend, or elbow, in the lumens of the body **102**. Other degrees of bend are possible. The chamber **302** can generally define the region of highest flow disturbances in the infusion fluid **119** as the infusion fluid **119** is delivered from the flow source tubing to the flow outlet **118** of cannula **104**. The flow disturbances within the chamber **302** resulting from the change in flow direction generally results in a negligible effect on the transmittance of light **109** being emitted from the LED **108** downstream into the eye **10**. In some embodiments, the space between the fluid pathway and light emitting diode can be optimized so that the cross-sectional area of the fluid conduit remains substantially constant in order to maximize and/or substantially maximize high light transmittance and/or high fluid flow rate.

[0064] With reference now to FIG. **4**, a further embodiment of an internal chamber **402** of the body **102** is shown. As described above, the chamber can define the region where the lumens **202**, **204** join and the infusion fluid **119** makes any required change in direction. The chamber **402**, as shown in FIG. **4**, can provide a converging diameter for the infusion fluid **119** and light **109** after the change in direction from the lumen **204** into the lumen **202**. The diameter of the chamber **402** can be greater than the diameter, or width, of the lens **304**, or the dispersion angle of the LED **108** in the absence of a lens installed in the body **102**. The greater diameter of the chamber **402** can thus distance the LED's emitted or directed light **109** from the flow disturbances due to internal surface discontinuities and directional changes represented by the corners, or changes in surface direction, of the chamber **402**. In an embodiment, the change in direction of the light can be further influenced by features to improve the refractive index differences in the chamber and assist the light **109** passing through the first lumen **202**, e.g. coatings, material selection, or the like. The increased distance can reduce the effect fluid flow disturbances can impart on the light **109** transmitted downstream through the first lumen **202**.

[0065] With reference to FIG. **5**, a further embodiment of an internal chamber **502** of the body **102** is shown. As described above, the chamber can define the region where the lumens **202**, **204** join and the infusion fluid **119** makes any required change in direction. The chamber **502**, as shown in FIG. **5**, can provide an increased volume for the flow disturbances imparted by the change in direction of the infusion fluid **119** flow to dampen out of the flow stream, as well as distancing the flow internal surface discontinuities from the transmitted light **109**. The increased distance and volume can reduce the effect fluid flow disturbances can impart on the light **109** transmitted downstream through the first lumen **202**.

[0066] With reference to FIGS. **1-5**, the body **102** can include the LED cavity **107**, or aperture, extending from the proximal surface **114** into the body **102**. The cavity **107** can removably receive the LED **108**, and is sized to provide a fluid seal to prevent leaking of the infusion fluid **119** during use and operation of the cannula system **100**. The sealing function can be provided by any acceptable means, for example, a tightly toleranced dimensional fit between the cavity **107** and the

LED **108**, a biologically compatible sealing material between the cavity **107** and the LED **108**, e.g. a seal, a gasket, a viscous lubricant, or the like, or other suitable means. The LED **108** can be snapped, friction fit, or otherwise tightly located in place in the cavity **107** to prevent fluid **119** leakage. The LED **108** can generally be located concentrically to the body **102** about a centerline axis **300**, as shown in FIG. **3**. In an embodiment, the LED can be offset from the centerline axis **300**, as described in detail below and shown in FIG. **21**A. The LED **108** can be positioned to project, or transmit, light **109** internally to the body **102** through the first lumen **202**, as further shown in FIGS. **2-5**.

[0067] The body **102** can further include a lens **304** located along centerline axis **300** and adjacent the LED cavity **107** such that the lens can be adjacent the LED **108** and the light **109** emitted from the LED **108**. The lens **304** can be integrally molded into the body **102** during fabrication. In some embodiments, the lens **304** can be fabricated independently of the body **102** and assembled into the body **102**. In some embodiments, the lens **304** can be fabricated as a part of an LED housing assembly and inserted, or installed, into the body **102** upon installation of the LED housing assembly.

[0068] The lens **304**, as shown in FIGS. **3-5**, can converge and/or collimate the light **109** emitted from the LED **108** downstream through the first lumen **202** toward and into the eye **10** and/or filter out unwanted and/or unnecessary light wavelengths from the emitted light **109** to selectively illuminate anatomical features within and/or adjacent the eye **10**. The lens **304** can further provide a sealing function within the first lumen **202** through which the incision instrument, or trocar, passes to facilitate insertion of the cannula system **100** into the eye **10**. The lens **304** sealing function can be provided by any acceptable means, for example, a tightly toleranced dimensional fit between the lens **304** and the first lumen **202**, a biologically compatible sealing material between the lens and the lumen **202**, e.g. a seal, a gasket, a viscous lubricant, or the like, or other suitable means.

[0069] The body can be fabricated integrally with the conduit **106** and the cannula **104** to define a single piece cannula system **100**. The body **102**, and the cannula system **100** can be fabricated by injection molding to obtain the complex geometry and small form factor required for ophthalmic surgery and insertion into the eye **10**. In some embodiments, the cannula system can be fabricated with more than one piece and can be assembled to make the cannula system **100**. In some embodiments, any manufacturing method, e.g. machining, adhesive bonding, or the like, can be implemented to fabricate the cannula **104** and/or the cannula system **100**.

[0070] The body **102**, as shown in FIGS. **1-5**, can be made of a transparent or amber material having a high percentage of light transmission to facilitate a single piece fabrication method and provide a cannula that is transparent, capable of readily dispersing the light **109** in a wide-angle distribution pattern into the vitreous cavity of the eye **10**. For example, the body **102** can be made of any suitable biologically compatible material such as polyamide, polycarbonate, acrylic, silicone, or the like, or a combination thereof. In some embodiments, the cannula system **100** can include multiple individually fabricated elements, for example the cannula **104**, and/or the body **102**, and/or the conduit **106**, that are subsequently assembled to define the cannula system **100**. The individually fabricated elements can, for example, be adhesive bonded together to define the cannula system **100**. In some embodiments, the body can be fabricated of an opaque material and the cannula **104** can be fabricated from a transparent material.

[0071] The body **102** can generally have a round, or circular, periphery extending between the distal end **112** and the proximal end **114**. The diameter of the periphery can be between about 0.030 inches and about 0.125 inches, more preferably between about 0.050 inches and about 0.070 inches. The body **102** can have a wall thickness between about 0.010 inches to 0.030 inches. The height, or length, along the centerline axis **300** of the body **102** can generally be between about 0.030 inches and about 0.125 inches, more preferably between about 0.050 inches and about 0.070 inches.

[0072] The cannula **104**, as shown in FIGS. **1-5**, can be coupled to the body **102** distal end **112**. The cannula **104** can be a hollow elongate member, or cylinder, providing a lumen to concurrently deliver the infusion fluid **119** and transmit light **109** emitted by the LED **108** from the body **102** into the vitreous cavity of the eye **10**. The cannula **104**, similar to the body **102**, can be a transparent, or semi-transparent, or amber material having a high percentage of light transmission, cylinder to facilitate dispersion of the light **109** into the surgical site within the vitreous cavity along the full length of the cannula **104** sidewalls. The dispersion of the light **109**, and thus the field of view at the surgical site, can be selectively controlled by geometry, transparency, and materials included in fabricating the cannula **104**. As described in detail below and shown in FIG. **14**, optical elements such as prisms, or the like, can be fabricated into the cannula **104**. The optical elements can be fabricated and/or oriented to disperse at predetermined angles, and spaced longitudinally along the centerline axis **300** to obtain predetermined coverage for the field of view **1602**, shown, for example, in FIG. **15**.

[0073] The cannula **104** can generally include a small form factor to facilitate insertion, function, and interoperability with the possible assortment of additional instruments required at or adjacent the surgical site. The cannula **104** can have a relatively much smaller cross-section normal to the centerline axis **300**, as compared to the body **102**. The cannula **104** can include a size of between about 35 gauge and about 15 gauge, more preferably between about 30 gauge and about 20 gauge, even more preferably a size of 25 gauge or 23 gauge or 20 gauge cannula. The cannula **104** can be longitudinally sized to have a length sufficient to penetrate and extend beyond the sclera **14** of the eyeball **10** and into the vitreous cavity, yet minimize the interference with surgical site requiring visual line of sight to the surgeon and physical access to the other various instruments to perform the ophthalmic surgery. The cannula **104** can have a length of between about 2.0 mm and about 10.0 mm, more preferably between about 2.0 mm and about 3.0 mm, and still more preferably between about 2.3 mm and about 2.7 mm. The cannula **104** can protrude beyond the sclera a length of between about 01.0 mm and about 10.0 mm, more preferably between about 01.0 mm and about 3.0 mm, and still more preferably between about 1.5 mm and about 2.5 mm.

[0074] With continued reference to FIGS. **1-5**, the cannula **104**, as described above, can provide an accessway lumen for an incision instrument, such as a trocar, for creating an incision in the sclera **14** to facilitate insertion of the cannula **104** into the eyeball **10** and the vitreous cavity. The cannula **104** can be inserted transconjunctivally to provide for an incision that can seal suturelessly upon removal of the cannula. The elastic nature of the sclera forms a tight, or substantially tight,

seal around the cannula to prevent vitreous fluid and/or infusion fluid or the like from leaking out of the incision. In an embodiment, the distal end of the cannula **104**, adjacent the outlet **118**, can be formed at a non-orthogonal angle, or tapered, to the centerline axis **300** and can be provided with a tapering, or sharpened, wall thickness. The sharpened and angled end can define an incision instrument capability for the cannula **104**, negating the need for a separate incision instrument to extend longitudinally through the body **102** and the cannula **104** of the cannula system **100**. Geometry, optical elements, optical coatings, and the like, can be implemented into the cannula **104**, such as adjacent the outlet **118**, to facilitate a symmetric and sufficient dispersion of the light **109** transmitted through the cannula system **100**. The additional optical considerations can offset the uneven dispersion of the light **109** out of an angled end of the cannula **104**.

[0075] With continued reference to FIGS. **1-5**, the cannula **104**, similar to the body **102**, can be made from any of a variety of transparent capable materials. For example, the cannula **104** can be made of any suitable biologically compatible transparent materials such as polyamide, polycarbonate, acrylic, silicone, or the like, or a combination thereof. As described above, the cannula **104** can be integrally fabricated with the body **102** and the conduit **106** to form a single piece, or monolithic, cannula system **100**. The cannula **104**, and the cannula system **100** can be fabricated by injection molding to obtain the complex geometry and small form factor. A single piece, or monolithic, cannula system **100** structure can be less susceptible to breakage, providing for a more durable and/or rigid instrument. In some embodiments, the cannula system can be fabricated with more than one piece and can be assembled to make the cannula system **100**. In some embodiments, any manufacturing method, e.g. machining, adhesive bonding, or the like, can be implemented to fabricate the cannula **104** and/or the cannula system **100**.

[0076] The cannula system **100** can further include a conduit **106**, illustrated in FIGS. **1-5**. The conduit **106** can provide an accessway for the infusion fluid **119** to flow from the infusion port and fluid source tubing, to the first lumen **202** and, ultimately, the eye **10**. The conduit **106** defines the portion of the second lumen **204** that is not located internally to the body **102**. Therefore, the dimensional characteristics are described above with respect to the infusion port and the second lumen **204**. The length of the conduit can vary according to the particular application of the cannula system **100**.

[0077] With continued reference to FIGS. **1-5**, the cannula system **100** can include the LED **108** that can be coupled to the body **102** within the LED cavity **107**. The LED **108** advantageously provides an efficient high intensity light source requiring low power consumption with decreased light **109** transmission loss in transmitting light **109** from the LED **108** to the surgical site within the vitreous cavity of the eye **10**. Additionally, the LED **108** provides a reliable, low cost light source to the cannula system **100**, such that the cannula system **100** can be a disposable surgical instrument. In an embodiment, the light source can be an organic light emitting diode (OLED).

[0078] LED light sources used in/for embodiments of the present disclosure can provide various advantages. As they are based on electronic component design, LEDs are largely, if not entirely, immune from or resistant to system vibrations. LEDs can be protected from dirt and moisture, facilitating useful lifetimes that can increase to, or approach, thousands of hours, which is much higher than a non-LED light source. Further, LED-based light sources can operate at lower temperatures, and therefore have lower heat dissipation requirement, thereby eliminating complex heat sink systems commonly used for lighting techniques. Cost of a single LED system is exponentially less expensive than a standard light source system because of the simpler packaging. Additionally, LEDs are available in multiple colors/including high output efficiency.

[0079] As is known, LEDs are devices that convert electrical energy into optical energy. An LED is a semiconductor based diode, or device, including a p-doped region and a n-doped region. The principle behind an LED provides that as an electron in the conduction band recombines with a hole in the valence band, the electron makes a transition to a lower-lying energy state. This leads to the release of energy in an amount equal to the band-gap energy. In general, the energy is dissipated by phonons, i.e. heat, or photons, i.e. light. In an LED, this energy is directed into emitted light energy.

[0080] When an LED is stimulated electrically by a pulsed current or by a current produced in response to an applied voltage, electrons and hole carriers in the p-n junction recombine, emitting photons as an incoherent narrow spectrum of light. This phenomenon is termed electroluminescence, where the color, e.g. UV, Visible, or IR, of light depends on the type of the semiconductor materials used for the p-doped region and n-doped region. The optical power the LED emits can be dependent on the doping and/or the forward current through the diode interface. The frequency response of LED's are approximately 120 Hz and the light can be collimated with a lens system. Further details are provided in application Ser. No. 12/237,110 filed Sep. 24, 2008, the entirety of which is hereby incorporated by reference herein.

[0081] With continued reference to FIGS. **1-5**, the LED **108** can be assembled, or potted, into a tray, or housing, that can readily assemble into the cannula system **100**, in particular the LED cavity **107**. The housing, similar to the body **102**, cannula **104**, and conduit **106**, can be fabricated from any suitable biologically compatible transparent material, e.g. polyamide, polycarbonate, acrylic, silicone, or the like, or a combination thereof. In an embodiment, the housing material can be opaque except for the window area located adjacent the LED **108** light exit. The LED **108** can be encapsulated, or housed, in a transparent or semi-transparent housing and can be inserted or installed into various cannula and/or body **102** configurations configured to receive the housing, or tray, in any variety of orientations of the LED or cannula and/or positions within the cannula, either alone or in combination with filters, lenses, or any combination or quantity of each thereof.

[0082] The LED **108** parameters can provide intensity to the eye **10** of between about 4 lumens and about 25 lumens, more preferably between about 7 lumens and about 20 lumens. The wavelength of light transmitted to the eye **10**, after being emitted from the LED and subsequently transmitted and conditioned through a window, filter, lens, or combination thereof, can be between about 400 nm and about 700 nm, more preferably between about 430 nm and about 660 nm. The beam size can be between about 0.2 mm and about 3.0 mm, more preferably between about 0.3 mm and about 1.4 mm, and more preferably between about 0.4 mm and about 1.0 mm. In an embodiment, the beam size is defined adjacent an optical element, such as lens **304**, or the like.

[0083] The direct transmission of the LED **108** light source into the vitreous cavity of the eye **10** via the first lumen **202**

and the transparent cannula **104** can advantageously minimize light transmission loss and can improve light intensity because of the adjacent positioning of the light source to the eye as compared to currently available fiber optic light systems. The use of a direct transmission LED eliminating a fiber optic line can also reduce the torque applied to the cannula system **100** by the appurtenant instruments, and can enable hands-free surgical illumination. In an embodiment, the self contained illuminated infusion cannula system **100** can reduce the number of incisions required, thereby allowing bimanual, or two ports, surgery. In an embodiment, the cannula system **100** can illuminate the eye with various colors and/or tints with and without combinational instruments. In some embodiments a fiber optic light source can be provided to augment the LED **108**. In some embodiments, both a fiber optic light source and an LED mayincrease torque on the cannula system **100** which can be acceptable under certain conditions.

[0084] In an embodiment, the LED housing can be utilized to house an ultrasonic transducer, rather than an LED light source. The ultrasonic transducer can be implemented for treatment of the eye **10**. For example, the transducer can be a high intensity focused ultrasound (HIFU) that can direct concentrated heat and/or vibration at tissue within the eye, or the transducer can be a high power focused ultrasound (HPFU) to transmit vibration across a larger area to emulsify tissue within the eye. The use of an ultrasonic transducer can be combined with any of the cannula system embodiments disclosed herein.

[0085] The power source **110** can comprise a separate power supply box from which electrical lines can be coupled to the LED **108** light source (FIG. **1**). The electrical lines can be thin, lightweight insulated wires that can apply minimal and/or substantially minimal torque on a cannula system **100** inserted and resting on, or adjacent, the sclera **14** of the eye **10**. The power source **110** energy supply component can be an AC source or a DC source (for example, a battery or rectified AC source) and can also power an electronic control panel system, not shown. The electronic system, in turn, can consist of the microprocessor circuitry, described in detail below, which can be operational to provide a signal, for example a current pulse, to the one or more LED **108** light sources. In addition, the circuitry can include a converter/regulator, or a boost converter. For battery-powered embodiments, a converter can be operable to step up the battery voltage to that required for LED light sources.

[0086] In the illustrated embodiment of FIG. **6**, a cannula system **100** with a removable cap **600** is shown. The cannula system **100** can include a body **624** similar in configuration to the body **102** described in detail above, with the exception of additional features to interface with the cap **600**. The removable cap **600** provides an additional means of moving the LED **616** out of or away from the accessway for the incision instrument and then coupling the LED **616** adjacent the first lumen **202** in a manner that prevents fluid **119** leakage past the LED **616** or the LED tray or housing.

[0087] The body **624** can include a proximal end **612** and a protrusion **608** adjacent the proximal end **612**. The protrusion **608** can be located substantially around the periphery of the body **624** to ensure a tight equally distributed load between the cap **600** and the body **624** when the cap **600** is located or snapped over the protrusion **608**. In an embodiment, the protrusion **608** can include a plurality of independent protrusions spaced circumferentially about the periphery of the body **624**.

[0088] The cap **600** can include a distal end **620** and a proximal end **622**, as determined when the cap **600** is attached to the body **624**. The cap **600** can further include a recess **610**, a lens **614**, an LED **616**, and a lip **618**. The LED **616** is located in a central portion of the proximal end **622**, substantially aligned with a cap centerline axis **626**. The lens **614** can be coupled to the cap adjacent the LED **616**, also substantially aligned with a cap centerline axis **626**.

[0089] The lip **618** can be configured to be placed around the body **624** protrusion **608**, such that the cap **600** receives the body **624**. The cap **600** and the body **624** can be coupled together, the axis **626** can be substantially coaxial with the body centerline axis **300** when the cap **600** and the body **624** are coupled. The recess **610** extends substantially around an internal cavity of the cap **600**, the recess being shaped to receive and interface with the protrusion **608**. The fit, or dimensional tolerancing, between the cap **600** and the body **624** is sufficiently tight that when the cap **600** is coupled to the body **624**, a sufficient load is distributed across the interfacing surfaces to prevent fluid **119** leakage. In an embodiment, the cap **600** is configured to be received into the proximal end **612** of the body **624** to couple the body **624** and the cap **600** together.

[0090] The cap **600** can be hinged or coupled to the body **624** via at least a pair of arms **602**, **604** that can be hingedly coupled to each other. The opposing ends of the arms **602**, **604** can be hingedly coupled to the cap **600** and the body **624**, respectively. The arms **602**, **604**, cap **600**, and body **624** are coupled via hinges **606***a-c*, which can provide relative rotation between the hinged elements about the hinge. Other hinging configurations or embodiments are possible. The hinged coupling advantageously provides the convenience of containing the cap **600** adjacent the surgical site when the cap **600** is removed from the body **624** to insert the incision instrument, or trocar. Upon completing the incision, inserting the cannula **104** into the eye **10**, and removing the trocar, the cap **600** can be rotated about the hinged arms and lockingly engaged onto the body **624**. The arms **602**, **604** can be removed, including destructively removed, from the cap **600** and body **624** to create an open work area about the surgical site and avoid inadvertent contact with the flexible hinge.

[0091] In the illustrated embodiment of FIG. **7**A, the cannula system **100** with a flexible arm **702** coupling the cap **600** and the body **624** is shown. The flexible arm **702** can provide an alternative hinging mechanism between the cap **600** and the body **624**. The flexible arm **702** can allow a single piece molding of the cap **600** and the body **624**, whereby only the LED **616** is required to be potted into the cap **600** to define a complete cannula system **100**. In an embodiment, the cap **600** and body **624** and independent pieces that are, for example, adhesively bonded to each other via the flexible arm **702**. Upon cap **600** lockingly engaging the body **624** after cannula **104** insertion, the flexible arm **702** can be removed from the cap **600** and body **624** to create an open work area about the surgical site and avoid inadvertent contact with the flexible hinge.

[0092] In the illustrated embodiment of FIG. **7**B, the cannula system **100** with another embodiment of the cap **600** and the body **624** is shown. The cap **600** can include a cap extension **708** in the cap cavity that protrudes downward from the cap proximal end **622** toward the distal end **620**. The body **624** can include first lumen **706** and the chamber **704**.

[0093] The cap extension **708** can locate the LED **616**, and lens **614**, if applicable, closer to the junction between the first

lumen **706** and the second lumen **204**. The chamber **704** can be shaped to receive the cap extension **708**. Placement of the LED **616** closer to the cannula outlet **118** can reduce light losses and improve the light transmittance to the eye **10**. The cap **600** having cap extension **708** can be coupled to the body **624** by flexible arm **702**, hinged arms **602**, **604**, or a functionally equivalent hinging mechanism, device, or method.

[0094] In the illustrated embodiment of FIG. **8**, the cannula system **100** is shown with a cap **800** and a body **824**. The cap **800** can include a proximal end **822**, a distal end **820**, and a cone **826**. The body **824** can include a proximal end **812** and a chamber **828**. The cap **800** is similar to cap **600** except the cap **800** can include the cone **826** that extends downward away from the cap proximal end **822** and protrudes beyond the location where the fluid **119** enters the chamber **828** from conduit **106**. The cone **826** can advantageously position the LED **616**, and the lens **614** if applicable, below the 90 degree bend from the second lumen **204** to the chamber **828** and the first lumen **706**, as illustrated in FIG. **8**. Positioning the LED **616** below the second lumen **204** can place the LED downstream of the flow disturbances generated by the bend (for example, the 90 degree bend), and can reduce the likelihood of the flow causing loss of light **109** transmittance and/or shadows in the light.

[0095] The chamber **828**, as illustrated in FIG. **8**, can include almost the entire internal volume of the body **824**. In an embodiment, the chamber **828** can include any geometry similar to, or equivalent to, the chamber geometries described above, provided the cone **826** is compatible and can interface the various geometries when the cap **800** is lockingly engaged with the body **824**.

[0096] In the illustrated embodiment of FIGS. **9-13**, an embodiment of a cannula system **900** is shown. The cannula system **900** can provide for a second aperture **910** positioned on the periphery of a body **902** that allows lateral movement of the LED **918** away from a centerline axis **1000**. The lateral movement of the LED **918** can establish access through a first lumen **1024** for the incision instrument, or trocar. The LED **918** can then be urged laterally to lockingly engage and establish a fluid seal with the body **902**.

[0097] The body **902** can include a distal end **908** and a proximal end **906**. A first aperture **904** can be positioned adjacent the proximal surface at the proximal end **906**. The first aperture **904** can open to a first lumen **1024** that extends the full length of the body **902** and the cannula **104**. The second aperture **910** can define an opening into the body **902**, the opening defining a chamber **912**. The chamber **912** can be configured to receive an insert or LED tray/housing **916**. The chamber **912** can include a tapered surface **1002** on a proximal surface of the chamber **912**. The tapered surface **1002** can define a decreasing thickness, or longitudinal height, of the chamber **912** as the second aperture **910** extends further away from the opening of the second aperture **910**. The decreasing height of the chamber **912** can define a wedge-like feature that lockingly receives a similarly shaped end of the insert or LED tray/housing **916**. The wedge shape can force the insert **916** distally, creating downward forces, and can create a fluid seal between a bottom face **924** of the insert **916** and a distal surface of the chamber **912**. In an embodiment, the sealing function can be provided by any acceptable means, for example, a tightly toleranced dimensional fit between the insert **916** and the chamber **912**, a biologically compatible sealing material between the insert **916** and the chamber **912**, e.g. a seal, a gasket, a viscous lubricant, or the like, or other suitable means.

[0098] The insert **916**, as illustrated in FIGS. **9-13**, can include the bottom face **924**, a front face **922**, an LED **918** in a cavity, and a top tapered surface **920**. In an embodiment, a lens **1004** can be coupled to or adjacent the bottom face **924**. The tapered surface **920** can include a taper angle θ, that can be between about 0.25 degrees and about 10 degrees, more preferably between about 0.75 degrees and about 3 degrees. In an embodiment, the top tapered surface **920** can taper across any lateral length, which can correspondingly vary the wedge contact surface and the downward distally directed fluid sealing force distribution.

[0099] The body **902** and the insert **916** can be coupled by a pair of connector members **914**. The connector members can provide for a single piece integrally molded assembly of the cannula system **900**. Upon removal of the trocar from the cannula system, the connector members **914** can be decoupled at the insert **916**. The surgeon can use instruments, such as a pair of forceps, to urge the insert **916** into the aperture **910** and chamber **912**. The connector members **914** can provide an additional locking mechanism, in addition to the tapered wedge locking feature, to retain the insert **916** in the chamber **912**. The locking mechanism of connector members **914** can also prevent removal of the insert **916** such that the cannula system **900** can only be a single use medical device system.

[0100] In the illustrated embodiment of FIGS. **14-17**, embodiments of a cannula system **100** having varying optical elements coupled to the cannula, are shown. As illustrated in FIGS. **14** and **15**, the dispersion of the light **109**, and thus the field of view at the surgical site, can be selectively controlled by the geometry, transparency, and materials included in fabricating a cannula **104**. Optical elements **1406***a-d* can be fabricated into the cannula **104**. The optical elements **1406***a-d* can be devices such as prisms, lenses, filters, or the like. The optical elements **1406***a-d*, as illustrated in FIGS. **14** and **15**, can extend circumferentially for at least a portion of the cannula **104** outer diameter. The optical elements can be fabricated and/or oriented to disperse at predetermined angles **1408***a-d*, and spaced longitudinally along a centerline axis of the cannula **104** to obtain predetermined coverage for the field of view **1602**, shown, for example, in FIG. **15**. In an embodiment, the predetermined angles **1408***a-d* can be the same or substantially the same, all different or substantially different, or any combination thereof, to define the field of view **1602**.

[0101] With reference to FIGS. **16** and **17**, a cannula **104** having optical element **1502** located at the cannula outlet **118** is shown. The cannula **104** can have a single optical element, for example a prism can extend circumferentially around the full outer diameter of the cannula **104**. The dispersion beam angle can define the beam area and ultimately the field of view **1702**. Comparison of field of views **1602**, **1702** can indicate the variation in illumination capability, including depth and width, dependent upon the optical element parameters, characteristics, and quantity. Cannula **1402** can include prisms having a greater dispersion angle relative to the cannula outer diameter and can include a greater number of prisms coupled to the cannula. The resulting field of view **1602** can be significantly larger than the field of view **1702**, which can have a smaller dispersion angle **1504** and only a single prism **1502** located at the distal end of the cannula **104**.

[0102] With reference to FIG. **18**, an embodiment of a cannula **1802** is shown. The cannula **1802** is similar to the cannula embodiments described above except the cannula **1802** can include a plurality of fluid apertures **1804***a-e*. The fluid apertures **1804** can be spaced longitudinally and circumferentially, and can provide apertures at various depths in the eye **10** and at various angles relative to a longitudinal axis. The fluid apertures **1804** can provide exit outlets for the infusion fluid **119** to irrigate and provide intraocular pressure to the eye **10**. The fluid apertures **1804** can evenly distribute the infusion fluid **119** and avoid delivery of the fluid **119** to only a local portion of the vitreous cavity of the eye **10**. In an embodiment, the fluid apertures **1804** can transmit light **109** at predetermined angles and longitudinal locations.

[0103] With reference to FIG. **19**, an embodiment of a cannula system **100** that can have a cannula **1900** is shown. The cannula **1900** can include at least a portion of the distal tip **1904** that can include a phosphorescence material applied or coupled to the surface and/or embedded in the transparent material. The cannula system **100** can further include an optical element **1902** that can selectively disperse wavelengths of light **109**, and the wavelengths associated energy. The optical element can further collimate the selectively disperse wavelengths to facilitated transmittance through the full length of the cannula **1900**. The selective wavelengths transmit through, and the wavelength energy excites, the phosphorescence material located on the cannula **1900**. The tip generates divergent relaxation wavelength lights and illuminates the surgical sight. The illuminated light can result in an intraocular illumination with relatively high intensity.

[0104] In an embodiment of the cannula system illustrated in FIG. **19**, the light source system can be a light emitting diode system that can generate white light, or so-called warm white light. The light emitting diode system can comprise a light emitting diode, generating blue light, wherein the tip and/or wall of the optical bus is coated with a phosphorous layer. When the divergent blue light hits on the phosphorous chemical in the coating layer, this layer in turn generates a greenish and yellowish light accompanied with the original bluish light, and the light generated by the light emitting diode system can be whitish depending on the contribution of the blue, green, and yellow lights.

[0105] In an embodiment of the cannula system illustrated in FIG. **19**, the light source system, disclosed herein, can be a laser diode system that can generate white light. The laser diode system can comprise a laser diode, generating blue light, wherein the tip and/or wall of the optical bus is coated with a phosphorous layer. When the divergent blue light hits on the phosphorous chemical in the coating layer, this layer can generate a greenish and/or yellowish light accompanied with the original bluish light, and the light generated by the laser diode system can be whitish depending on the contribution of the blue, green, and/or yellow lights.

[0106] The use of lenses to disperse a specific wavelength bandwidth can be combined with multiple LEDs for selective colorization and tint of an illuminated area. Independent LED power control can give the surgeon illumination options for various surgical procedure needs. The use of bandwidth limited wavelength light allows physicians to operate with improved contrast for visualization of specific structures in the eye. Additional features include controlling not only the intensity, but also the quality of the light, which is improved by changing the color, or color temperature, of the light from the light source via a filter device, with the light produced from one or more sources. Further details regarding these bandwidth limited light and light coloration modifying devices, systems, and methods for providing illumination are shown and described in U.S. Pat. No. 7,654,716 and in U.S. Publication 2009-0146583, and the entirety of both are incorporated by reference herein and form a part of this specification.

[0107] With reference to FIG. **20**, a cannula system **100** with a cannula **2000** is shown. The cannula system is similar to the system illustrated in FIG. **19**, except the cannula **2000** can include a phosphorescence material applied or coupled to the surface and/or embedded in the transparent material along the full length of the cannula **2000** from the distal end **112** of body **102** to the distal end **2004** of the cannula **2000**.

[0108] With reference to FIGS. **21**A and **21**B, a cannula system **2100** is shown with an LED **2104** offset to the side of the first lumen **202**. The majority of the cannula system **2100** is similar to the cannula systems described above, except for the location of the LED **2104**, the location and configuration of an optical element **2108**, and the length of the first lumen **202**. The LED **2104** can extend lengthwise, parallel to the first lumen **202**. The position of the LED **2104** off to the side of the body **102** can negate the need to move the LED **2104** out of the first lumen **202** to provide a passage for the incision instrument or trocar. Thus, the embodiment illustrated in FIGS. **21**A and **21**B can simplify creation of the incision.

[0109] The LED position adjacent the first lumen **202** can direct the light transmitted from the LED across laterally through the first lumen **202** rather than distally toward the eye **10**. The optical element **2108** can redirect, filter, magnify, or the like, the light **109** from the lateral direction to be directed distally through the first lumen **202** toward the eye **10**. The optical element **2108** can be springingly coupled to a window **2118** defined by a thin transparent portion of the body **102** that can be positioned between the LED **2104** and the first lumen **202**. The resilient spring-like, spring-loaded characteristic of the optical element **2108** can provide for temporary displacement of the optical element **2108** adjacent the sidewall of the first lumen **202** while the trocar is inserted through the first lumen **202**. Thus, the optical element **2108**, the first lumen **202**, and the trocar can be sized such that the optical element and the trocar can movingly fit relative each other within the first lumen **202**.

[0110] The LED **2104** position illustrated in FIG. **21**B can be advantageously located in the optical element **2108** downstream of the 90 degree bend through which the fluid **119** passes in transitioning from the second lumen **204** to the first lumen **202**. The downstream position places the optical element **2108** substantially beyond the greatest flow disturbances generated by the flow around the 90 degree bend between the two lumens.

[0111] In the illustrated embodiment of FIG. **21**C, a cannula system **2100** is shown with at least two LEDs **2104** offset to the side of the first lumen **202**. The cannula system of FIG. **21**C is similar to the cannula system of FIGS. **21**A and **21**B except that there is more than one LED positioned in the body **102**. The arrangement to redirect the lateral transmittance of the LEDs is also similar. Having more than one LED can allow each LED to be positioned slightly offset in the longitudinal direction from the first lumen **202**. This can provide dimensional clearance for the one or more optical elements to project light into the first lumen **202**. In an embodiment, the plurality of LEDs can have the individual light **109** transmit-

tance directed to a single optical element that will redirect the combined light **109** from the LEDs through the first lumen **202** toward the eye **10**.

[0112] The position of the LEDs **2104** to the sides of the body **102** can also negate the need to move the LED(s) **2104** out of the first lumen **202** to provide a passage for the incision instrument or trocar **2114**.

[0113] The multiple LEDs **2104** can include LEDs of various colors, such as blue, red, yellow, and white. The multiple LEDs **2104** of different colors can be provided on separate individual dies, or can include different color LEDs on a single die. These LED light sources can provide an optical signal/output for illumination in a band of specific wavelengths. The different sources, red, green, blue, white, etc., can be configured in a designated pattern for maximum light output efficiency. One of the advantages of using this configuration is that by controlling the current to the LED, the output light can be tuned to various intensities. This can allow for better safety, visualization, and illumination that is tunable to individual cases and surgeons. In addition, the variation in light of different spectrum from the outputs of the LEDs **2104** can allow for improved contrast ratios for surgical illumination.

[0114] In some embodiments, an illumination system can use multiple LED **2104** sources to provide increased flux strength for illumination. The multiple LEDs **2104** can be arranged in desired configurations about the first lumen **202**, such as equally spaced circumferentially, hex, line, chandelier, or the like. The entire visible spectrum of the LED **2104** light source wavelength optical output is usable. Additionally, the optical intensities of the LEDs **2104** are easily tunable with the input current.

[0115] Light produced by the LEDs can be dispersed through the lens **2108**. The lens **2108** can be made using any suitable materials and/or shapes. Further, any suitable configuration, e.g., thin film, Fabry-Perot, or the like, and/or material can be used for a filter applied to the light **109** dispersed from the LED **2104**. One or more lenses can provide optional magnification, collimation, or focusing within the first lumen **202**. Further details are provided in application Ser. No. 12/237,110, filed Sep. 24, 2008, incorporated by reference above.

[0116] With reference to FIG. **22**, an embodiment of a cannula system **2200** is shown. The cannula system **2200** includes two fluid infusion ports **2204**, **2206**, and offset externally positioned LED **2202** light source, a phosphorescence coated or embedded material cannula **2214**, and fluid apertures **2210***a-c*. The cannula system **2200** provides an additional embodiment that can selectively disperse the LED **2202** light wavelengths such that the desired energy is transmitted to the phosphorescence coated or embedded cannula **2214** to excite the material and advantageously illuminate surgical site in or adjacent to the eye **10**. The fluid apertures **2210***a-c* can provide infusion flow outlets to evenly deliver the infusion fluid **119** about the surgical site.

[0117] With reference to FIGS. **23** and **24**, a cannula system **2300** is shown. The cannula system **2300** is similar to the cannula systems described above except that the 90 degree bend can be provided with a generous transition radius rather than a sharp 90 degree bend transition. The generous transition radius can advantageously reduce the flow disturbances that are adjacent to a LED **2304** and a lens **2306**, if the optional lens is implemented in the embodiment. At least a portion of the flow bend transition radius **2310** can be fabricated as part of a modular cap **2302**, similar to the caps described above. Fabricating the radiused surface on an external surface of a separate piece of the cannula system can simplify the fabrication of the body. The transition radius illustrated in FIGS. **23** and **24** shows the inner diameter of the second lumen **2320** having a larger magnitude than the inner diameter of the first lumen **2312**.

[0118] With reference to FIG. **25**, a cannula system **2500** is shown. The cannula system **2500** is similar to the cannula system **2300** shown in FIGS. **23** and **24** except the inner diameter of the second lumen **2520** can have a smaller magnitude than the inner diameter of the first lumen **2512**.

[0119] With reference to FIG. **26**, a cannula system **2600** is shown. The cannula system **2600** is similar to the cannula systems described above except for the following features. The cannula system can include a body **2602**, a cannula **104**, and a chamber **2616**, and an opening **2608**. The cannula system can comprise a LED tray **2606** that is configured to slide laterally to allow instruments to pass through the cannula **104**. The LED tray **2606** can be configured to move from a first closed position to a second opened position. The cannula **104** can define at least a portion of a first lumen **202** that can receive a trocar **2612**, as illustrated in FIG. **26**. In an embodiment, the cannula system is prepackaged with a trocar positioned within the lumen **202** such that the LED tray **2606** is in the second opened position. After the trocar is used to make an incision in the eye, the trocar can be removed from the cannula **104**, thereby allowing the LED tray **2606** to move laterally into the first closed position. Alternatively, the cannula **104** is not prepackaged with a trocar positioned within the cannula. In an embodiment, a trocar can be inserted into the cannula **104**. As the trocar is inserted into the cannula **104** the distal end of the trocar can be configured to engage a tapered surface of the LED tray **2606** to urge the LED tray **2606** laterally to open the cannula **104** thereby allowing the trocar to pass through. The chamber **2616** can have a tapered proximal surface to define a wedge like feature as described above in detail in reference to FIGS. **9-13**.

[0120] The cannula system **2600** can further include the LED tray **2606**, an LED **2614**, and a resilient member, or spring **2610**. In an embodiment, any suitable resilient material can be included in the cannula system **2600**. The spring can be positioned to a lateral side adjacent the opening **2608**. The opening **2608** can provide access to the LED tray **2606** and the spring **2610**. The access through the opening **2608** can provide for the LED **2614** to be potted into the LED tray **2606**. The chamber **2616** can receive the LED tray **2606**, whereupon the LED tray **2606** can be urged to a lateral side against the resistance of spring **2610** and away from the first lumen **202** to allow the trocar **2612** to pass through the first lumen **202**.

[0121] With continued reference to FIG. **26**, the LED tray **2606** can include a tapered top, or proximal, surface to define a corresponding wedge shaped feature for sliding interaction with the tapered surface of the chamber **2616**. Removal of the trocar **2612** upon insertion of the cannula **104** into the sclera **14** provides for the spring to urge the LED tray **2606** adjacent the tapered surface of the chamber **2616**. The LED tray **2606** is urged such that the LED **2614** is substantially aligned to transmit light **109** distally through the first lumen **202** into the vitreous cavity of the eye **10**. In an embodiment, the LED tray **2606** forms a seal with the side walls of the lumen **202**. To further ensure a tight seal, the tapered surfaces of the LED tray **2606** and the chamber **2616** can be configured to provide counter forces that help ensure a tight seal. In an embodiment,

the LED tray **2606** is positioned above the second lumen **204**, thereby allowing the force of the entering infusion fluid to further push or urge the LED tray **2606** upward or proximally to form a tighter seal to prevent fluid from exiting the body **2602**.

[0122] In an embodiment, the LED tray **2606** can pivot about an end of the tray, rather than laterally slidable as described above. The tray can pivot about an end that is coupled to a portion of the chamber **2616**. The free end, or any portion of the LED tray **2606**, can be resiliently coupled to a portion of the chamber **2616**. Accordingly, the LED tray **2606** can pivot into and out of the first lumen **202** with resilient resistance provided by a suitable resilient member or spring **2610**. A trocar can be inserted and removed, urging aside and releasably positioning the LED tray **2606** adjacent the first lumen **202** in the process. The LED tray **2606** can be configured to pivot in any suitable direction that can place the LED tray adjacent the first lumen **202** for directing the light **109** out through cannula **104**, e.g., laterally, axially, or the like. Accordingly, the LED tray can be configured to move from a normal, at rest, first position to a second position as the trocar is inserted into the first lumen **202**, thereby allowing the trocar to pass through the lumen **202**. When in the first position, the LED tray **2606** can be urged into a lateral position or a position that is perpendicular to the longitudinal axis of the lumen **202**. In an embodiment, the LED tray **2606** forms a seal with the side walls of the lumen **202**. To further ensure a tight seal, the side walls of the lumen **202** can have a lip to interface with the LED tray **2606**. In an embodiment, the LED tray **2606** is positioned above the second lumen **204**, thereby allowing the force of the entering infusion fluid to further push or urge the LED tray **2606** upward or proximally to form a tighter seal to prevent fluid from exiting the body **2602**.

[0123] The above described details are combined and configured to provide a self contained illuminated infusion cannula that can readily positions, and is capable of readily repositioning, a medical implant at a desired location within a patient. The sclera incision, cannula insertion, incision instrument removal, and light transmittance to the vitreous cavity of the eye **10** is described with reference to FIG. **26** below, however the steps accordingly describe the implementation of any of the cannula systems described above during ophthalmic surgical procedures.

[0124] The cannula system **2600** can include assembling the LED **2614** into the LED tray **2606**. The LED **2614** can be coupled to the tray **2606** by potting the LED into an LED cavity within the tray, and locating the LED adjacent a transparent window for transmitting light **109** through the first lumen **202**. Assembling the cannula **2604** can include placing a trocar **2612** and extending it through, and out, the distal end of the cannula **104**. The inserting of the trocar through the cannula **104** and thus, the first lumen **202**, advantageously urges the LED tray **2606**, laterally moving the tray **2606** in the direction toward and against the resilience of the spring **2610**.

[0125] The sharpened tip of the trocar **2612** can be aligned with the desired incision, or insertion, location on the sclera **14** of the eye **10** that is suitable to illuminate the surgical site within the vitreous cavity. Locating the cannula **104** and the trocar **2612** adjacent and substantially normal, or any suitable angle of entry for the trocar **2612**, the cannula **104** and body **2602** is statically positioned. Urging the trocar **2612** through the statically positioned body **2602** and cannula **104**, the sharpened distal tip of the trocar **2612** penetrates the sclera, creating a suitable passage for the cannula **104**. The trocar can then be held statically positioned in the course of urging the body **2602** toward the outer surface of the sclera and concurrently urging the cannula **104** through the incision created by the trocar **2612**. The cannula **104** slides distally about the statically positioned trocar **2612**. The elastic nature of the sclera **14** forms a sealing engagement about the cannula **104** to prevent leakage of vitreous fluid, infusion fluid, or the like.

[0126] The trocar **2612** can be removed from the cannula system **2600** by proximally urging and sliding the trocar outward away from the eye **10** and out of the first lumen **202**. Removing the trocar **2612** allows the LED tray **2606** to releasably and slidably enter the chamber **2616**. The resiliency of the spring **2610** is configured to laterally move or suitably position the LED light transmittance portion over, or adjacent, the first lumen **202**.

[0127] Urging of the LED tray **2606** into the wedge receiving geometry of the chamber **2616** generates fluid sealing downward forces between the LED tray **2606** and the distal surfaces of the chamber **2616**. The opening **2608** provides access to supply additional locating loads against the LED tray **2606** to assist the spring **2610** and facilitate suitable location of the LED **2614** about the first lumen **202**. The cannula **104** can be adjusted by positioning the cannula system into a suitable arrangement and orientation adjacent the outer surface of the sclera **14** as well as in the vitreous cavity of the eye **10**.

[0128] Providing power to the LED transmits light **109** out of the LED **2614** and the LED tray **2606**. The light **109** is transmitted, or permitted to pass, distally through the first lumen **202** into the vitreous cavity of the eye **10**. Modifying the power source provided to the LED **2614** can vary the light transmittance to the surgical site according to a suitable illumination within the vitreous cavity and adjacent the eye **10**.

[0129] FIG. **27** is a cannula system **2700**, similar to other embodiments described above, except that a length of fiber optic **2702** is coupled to a lens **2704**. Fiber optic **2702**, depending on the light illumination criteria, may extend partially or fully through lumen **2706** of cannula **2708**. Because light source **2710** (preferably an LED, as shown) is contained in body **2712** adjacent lens **2704** more light may be transmitted to a surgical site compared to prior art embodiments having a remote light source transmitting light through a fiber optic length much longer than fiber optic **2702**. The relatively short length of fiber optic **2702** (preferably less than 2 cm) causes less light loss compared to prior art fiber optic embodiments with fiber lengths of hundreds of centimeters. The lower light loss allows the use of a lower power consuming and lower light producing light source **2710** to produce an acceptable illumination level, compared to prior art embodiments.

[0130] Body **2712** also includes an infusion port **2714** for receiving fluid to be delivered to a surgical site through lumen **2706**. Also, shown is a power source **2716** contained within the body **2712** for powering light source **2710**. It is also possible with advances in LED technology that light source **2710** may be placed at distal end **2718** of cannula **2708** and still allow infusion fluid to flow to a surgical site through lumen **2706**. If light source **2710** is placed at distal end **2718**, an electrical connection may extend through lumen **2706**, instead of fiber optic **2702**, and connect to power source **2716** or to a remote power source connection (not shown).

[0131] In some embodiments, the systems, processes, and methods described above are implemented using a computing system, such as the one shown in FIG. **28**. The computer

system **2802** is in communication with one or more computing systems **2820** and/or one or more data sources **2822** via one or more networks **2818**. While FIG. **28** illustrates an embodiment of a computing system **2802**, it is recognized that the functionality provided for in the components and modules of computer system **2802** may be combined into fewer components and modules, or further separated into additional components and modules.

[0132] Illumination and Infusion Control Module

[0133] The computer system **2802** includes an illumination and infusion control module **2814** that carries out the functions, methods, acts, and/or processes described herein. The illumination and infusion control module **2814** is executed on the computer system **2802** by a central processing unit **2810** discussed further below.

[0134] In general the word "module," as used herein, refers to logic embodied in hardware or firmware or to a collection of software instructions, having entry and exit points. Modules are written in a program language, such as JAVA, C or C++, or the like. Software modules may be compiled or linked into an executable program, installed in a dynamic link library, or may be written in an interpreted language such as BASIC letters, PERL, LUA, or Python. Software modules may be called from other modules or from themselves, and/or may be invoked in response to detected events or interruptions. Modules implemented in hardware include connected logic units such as gates and flip-flops, and/or may include programmable units, such as programmable gate arrays or processors.

[0135] Generally, the modules described herein refer to logical modules that may be combined with other modules or divided into sub-modules despite their physical organization or storage. The modules are executed by one or more computing systems, and may be stored on or within any suitable computer readable medium, or implemented in-whole or in-part within special designed hardware or firmware. Not all calculations, analysis, and/or optimization require the use of computer systems, though any of the above-described methods, calculations, processes, or analyses may be facilitated through the use of computers. Further, in some embodiments, process blocks described herein may be altered, rearranged, combined, and/or omitted.

Computing System Components

[0136] The computer system **2802** includes one or more processing units (CPU) **2810**, which may include a microprocessor. The computer system **2802** further includes a memory **2812**, such as random access memory (RAM) for temporary storage of information, a read only memory (ROM) for permanent storage of information, and a mass storage device **2804**, such as a hard drive, diskette, or optical media storage device. Alternatively, the mass storage device may be implemented in an array of servers. Typically, the components of the computer system **2802** are connected to the computer using a standards based bus system. The bus system can be implemented using various protocols, such as Peripheral Component Interconnect (PCI), Micro Channel, SCSI, Industrial Standard Architecture (ISA) and Extended ISA (EISA) architectures.

[0137] The computer system **2802** includes one or more input/output (I/O) devices and interfaces **2808**, such as a keyboard, mouse, touch pad, and printer. The I/O devices and interfaces **2808** can include one or more display devices, such as a monitor, that allows the visual presentation of data to a user. More particularly, a display device provides for the presentation of GUIs as application software data, and multi-media presentations, for example. The I/O devices and interfaces **2808** can also provide a communications interface to various external devices. The computer system **2802** may include one or more multi-media devices **2806**, such as speakers, video cards, graphics accelerators, and microphones, for example.

[0138] Computing System Device/Operating System

[0139] The computer system **2802** may run on a variety of computing devices, such as a server, a Windows server, and Structure Query Language server, a Unix Server, a personal computer, a laptop computer, and so forth. In other embodiments, the computer system **2802** may run on a mainframe computer suitable for controlling and/or communicating with large databases, performing high volume transaction processing, and generating reports from large databases. The computing system **2802** is generally controlled and coordinated by an operating system software, such as z/OS, Windows 95, Windows 98, Windows NT, Windows 2000, Windows XP, Windows Vista, Windows 7, Lenox, BSD, SunOS, Solaris, or other compatible operating systems, including proprietary operating systems. Operating systems control and schedule computer processes for execution, perform memory management, provide file system, networking, and I/O services, and provide a user interface, such as a graphical user interface (GUI), among other things.

Network

[0140] The computer system **2802** illustrated in FIG. **28** is coupled to a network **2818**, such as a LAN, WAN, or the Internet via a communication link **2816** (wired, wireless, or a combination thereof). Network **2818** communicates with various computing devices and/or other electronic devices. Network **2818** is communicating with one or more computing systems **2820** and one or more data sources **2822**. The illumination and infusion control module **2814** may access or may be accessed by computing systems **2820** and/or data sources **2822** through a web-enabled user access point. Connections may be a direct physical connection, a virtual connection, and other connection type. The web-enabled user access point may include a browser module that uses text, graphics, audio, video, and other media to present data and to allow interaction with data via the network **2818**.

[0141] The browser module or other output module may be implemented as a combination of an all-points addressable display such as a cathode ray tube (CRT), a liquid crystal display (LCD), a plasma display, or other types and/or combinations of displays. The output module may be implemented to communicate with input devices **2808** and they also include software with the appropriate interfaces which allow a user to access data through the use of stylized screen elements, such as menus, windows, dialogue boxes, tool bars, and controls (e.g., radio buttons, check boxes, sliding scales, and so forth). Furthermore, the output module may communicate with a set of input and output devices to receive signals from the user.

Other Systems

[0142] The computing system **2802** may include one or more internal and/or external data sources (e.g., data sources **2822**). In some embodiments, one or more of the data repositories and the data sources described above may be imple-

mented using a relational database, such as DB2, Sybase, Oracle, CodeBase, and Microsoft® SQL Server as well as other types of databases such as a flat-file database, an entity relationship database, and object-oriented database, and/or a record-based database.

[0143] The computer system **2802** as shown in FIG. **28** accesses one or more attribute filters. The attribute filters may be stored in a database or data repository. The computer system **2802** may access the one or more attribute filters through a network **2818** or may directly access the database or data repository through I/O devices and interfaces **2808**. The data repository storing the one or more attribute filters may reside within the computer system **2802**.

[0144] The computer system **2802** also accesses one or more consumer verification databases. The consumer verification databases may be stored in a database or data repository. The computer system **2802** may access the one or more consumer verification databases through a network **2818** or may directly access the database or data repository through I/O devices and interfaces **2808**. The data repository storing the one or more consumer verification databases may reside within the computer system **2802**.

Additional Embodiments

[0145] Conditional language, such as, among others, "can," "could," "might," or "may," unless specifically stated otherwise, or otherwise understood within the context as used, is generally intended to convey that certain embodiments include, while other embodiments do not include, certain features, elements and/or steps. Thus, such conditional language is not generally intended to imply that features, elements and/or steps are in any way required for one or more embodiments or that one or more embodiments necessarily include logic for deciding, with or without user input or prompting, whether these features, elements and/or steps are included or are to be performed in any particular embodiment.

[0146] The embodiments discussed above have been discussed in detail in connection with specific designs. It is to be understood, however, that skilled artisans will be able to implement inventive features by employing structures that may differ from the specific structures described above. Applicants in no way intend for the scope of the inventive features discussed herein to be limited to the specific structure used in certain embodiments. For example, the illustrated cannula system can provide illumination to arthroscopic or endoscopic procedures.

[0147] Although this invention has been disclosed in the context of certain preferred embodiments and examples, it will be understood by those skilled in the art that the present invention extends beyond the specifically disclosed embodiments to other alternative embodiments and/or uses of the invention and obvious modifications and equivalents thereof. In addition, while a number of variations of the invention have been shown and described in detail, other modifications, which are within the scope of this invention, will be readily apparent to those of skill in the art based upon this disclosure, for example, the arrangement and combination of LED light sources and optical elements can be any suitable arrangement sufficient to illuminate the vitreous cavity, or any other applicable body cavity. It is also contemplated that various combinations or subcombinations of the specific features and aspects of the embodiments may be made and still fall within the scope of the invention. Accordingly, it should be understood that various features and aspects of the disclosed embodiments can be combined with or substituted for one another in order to form varying modes of the disclosed invention. Thus, it is intended that the scope of the present invention herein disclosed should not be limited by the particular disclosed embodiments described above, but should be determined only by a fair reading of the claims that follow.

What is claimed is:

1. A cannula system comprising:
a body;
a light source contained within the body;
an infusion port formed in the body for receiving fluids to be delivered to a surgical site; and
a cannula formed with the body and having a lumen for delivering the fluids received through the infusion port and for transmitting light from the light source.

2. The system of claim **1**, further comprising a lens held within the body between the light source and the cannula.

3. The system of claim **2**, further including at least one length of fiber optic coupled to the lens and extending at least partially through the cannula.

4. The system of claim **1**, further including a power source contained within the body for powering the light source.

5. The system of claim **1**, further including a power source connected to and remote from the light source.

6. The system of claim **1**, wherein the light source is movable relative to the body for allowing a trocar to be inserted through the cannula to create an incision through which the cannula is inserted.

7. The system of claim **6**, further including a light source-containing portion that is removable relative to the body.

8. The system of claim **6**, the body comprising a cap, wherein the light source is contained in the cap.

9. The system of claim **1**, wherein the cannula is transparent.

10. The system of claim **1**, wherein the light source comprises at least one of a light emitting diode (LED), an organic light emitting diode (OLED), a light bulb, and a lamp.

11. A cannula system comprising:
a housing element having a lumen and a port configured to provide a flow of fluid to the lumen; and
a light emitting diode light source positionable within the housing element, the light emitting diode light source configured to direct light through the lumen when disposed within the housing element;
wherein the lumen is transparent and configured to permit light to pass through the lumen from the light emitting diode light source to a surgical site, lumen also configured to direct fluid to the surgical site.

12. The cannula system of claim **11**, further comprising a trocar, the lumen sized to allow the trocar to pass through the lumen.

13. The cannula system of claim **11**, wherein the transparent lumen having a length capable of extending from the outer surface of the eye into the interior of the eye, the length being less than one-half of the diameter of the eye.

14. The cannula system of claim **11**, further comprising a lens to direct light through the lumen.

15. The cannula system of claim **14**, wherein the lens comprises a plurality of circumferential optical prism elements spaced along the length of the lumen.

16. The cannula system of claim **11**, further comprising a power source for the light emitting diode light source.

17. The cannula system of claim **16**, wherein the power source comprises at least one battery within the housing element.

18. The cannula system of claim **11**, further comprising a phosphorescence material applied to the lumen, wherein light is dispersed from the lumen through the phosphorescence material.

19. A cannula system comprising:

a body having a proximal portion and a distal portion, a first lumen extending between the proximal portion and the distal portion, a port coupled to a second lumen, the second lumen communicating with the first lumen, and a first aperture extending to the first lumen at the proximal portion;

an insert element comprising a light source positionable within the first aperture to permit light from the light source to pass through the first lumen;

an elongate transparent member having a first portion and a second portion, a third lumen extending through the elongate member from the first portion to the second portion, the first portion coupled to the distal portion of the first lumen, the transparent member third lumen configured to permit light to pass from the light source to a surgical site, the transparent member third lumen capable of fluid communication with the port, the first lumen, and the second lumen.

20. The cannula system of claim **19**, wherein the light source is a light emitting diode light source.

21. The cannula system of claim **19**, further comprising a resilient member coupled to the insert and the body.

22. The cannula system of claim **21**, wherein the resilient member is configured to allow the insert to slide laterally within the body when an instrument is positioned within the first lumen.

23. The cannula system of claim **21**, wherein the resilient member is configured to allow the insert to pivot within the first lumen when an instrument is positioned within the first lumen.

24. The cannula system of claim **19**, wherein the elongate transparent member is configured to disperse light in a selective angular distribution pattern.

25. The cannula system of claim **19**, wherein the insert is positioned such that the light source is substantially downstream of the second lumen.

26. The cannula system of claim **20**, wherein the light emitting diode light source is substantially encapsulated in a transparent body, the light source directed through the transparent body into the elongate transparent member.

27. The cannula system of claim **19**, wherein the insert is removably located adjacent the first aperture to provide access to the first lumen by a surgical instrument.

28. The cannula system of claim **19**, wherein the insert is lockingly engaged adjacent the first aperture, the locking engagement providing a fluid sealing engagement between the insert and the body.

* * * * *