Feb. 16, 1937. W. C. EDWARDS 2,070,717

ELECTRICAL SWITCH

Filed Nov. 1, 1934

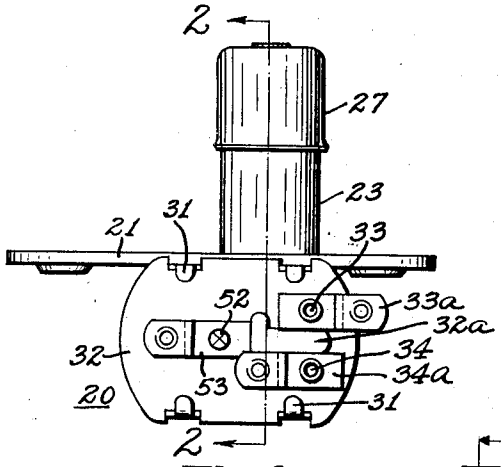

Fig. 1

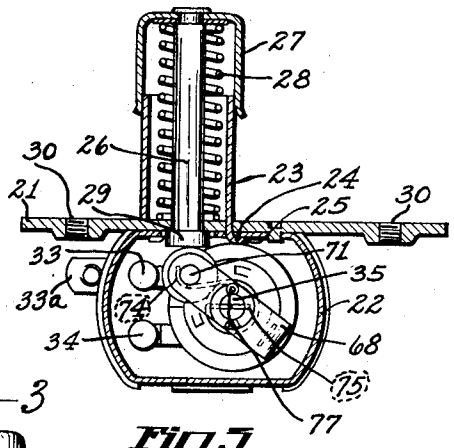

Fig. 3

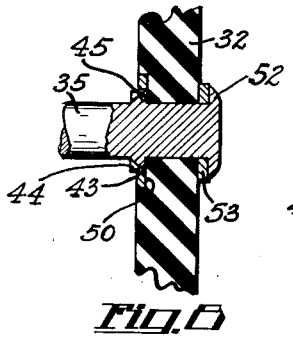

Fig. 6

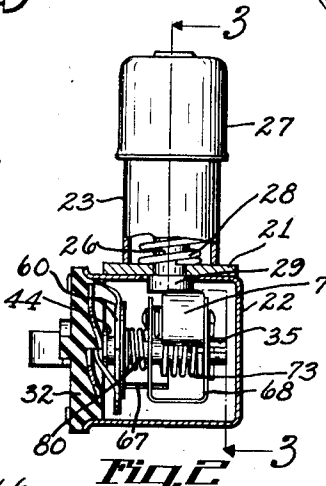

Fig. 2

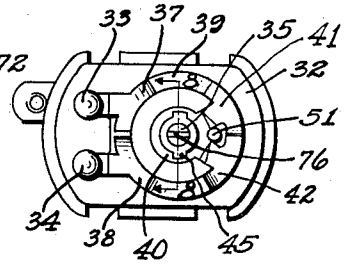

Fig. 4

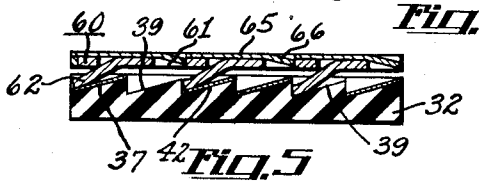

Fig. 5

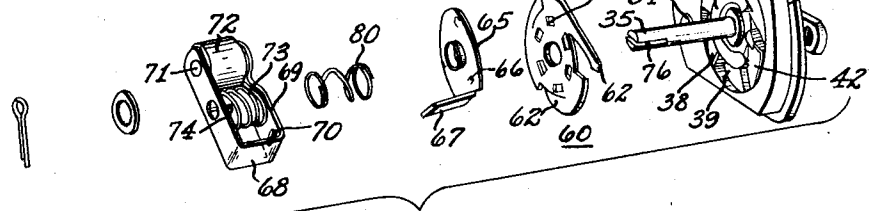

Fig. 6

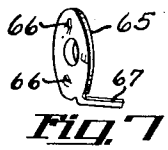

Fig. 7

INVENTOR
William C. Edwards
BY
Spencer, Hardman & Fehr
his ATTORNEYS

Patented Feb. 16, 1937 2,070,717

UNITED STATES PATENT OFFICE

2,070,717

ELECTRICAL SWITCH

William C. Edwards, Anderson, Ind., assignor to General Motors Corporation, Detroit, Mich., a corporation of Delaware

Application November 1, 1934, Serial No. 750,960

4 Claims. (Cl. 200—11)

This invention relates to electrical switches, and more particularly to the plunger type by which one to-and-fro motion of the plunger causes the switch to be closed in one circuit, and a subsequent motion of the plunger causes the switch to be closed in a second circuit.

One object of the present invention is the provision of an improved control switch for performing functions similar to those of the device of Harry E. Norviel Patent No. 1,906,084 in a more efficient manner.

Another object of the present invention is the provision of providing and arranging the switch contacts in such a manner so that when the controlling contact is moved a certain distance the controlling contact is positively held in a controlling position, regardless of wear of the contacts, to provide a more perfect control of the different circuits at all times, and the possibility of the controlling contact being returned to its preceding circuit-closed position is prevented.

Further objects and advantages of the present invention will be apparent from the following description, reference being had to the accompanying drawing wherein a preferred embodiment of the present invention is clearly shown.

In the drawing:

Fig. 1 is a rear view of the switch embodying the present invention.

Fig. 2 is a sectional view on line 2—2 of Fig. 1, some of the switch parts being shown in end elevation.

Fig. 3 is a sectional view taken substantially on line 3—3 of Fig. 2.

Fig. 4 is an inside view of the switch terminal and stationary contact support, showing the stationary contacts attached thereto.

Fig. 5 is a diagrammatic view of the switch, the elements being projected upon a single plane to illustrate the relation of the cooperating parts.

Fig. 6 is a perspective view, in separated relation, of the several parts of the switch shown in Figs. 2 and 3.

Fig. 7 is a perspective view of the ratchet member used in this improved switch.

Fig. 8 is a sectional view taken on line 8—8 of Fig. 4 on an enlarged scale.

Referring to the drawing, the present plunger type switch, which is indicated in its entirety by a numeral 20, is preferably supported upon the floor board of an automotive vehicle, not shown. The switch 20 comprises a rigid mounting bracket or plate 21. A cup-shaped casing 22 is attached to the plate 21 by a sleeve 23, the sleeve having tangs or tongues 24 extending through aligned apertures in the plate and case and bent over, as at 25 against the inside of the casing. The plate 21 and the casing 22 are also provided with aligned apertures through which one end of a plunger or actuating rod 26 may extend. The other end of the rod 26 is attached to a cap 27, as shown in Fig. 3, or in any other suitable manner.

The cap 27 is normally maintained in the position shown in the drawing by a spring 28 coiled about the rod and interposed between the plate 21 and a washer adjacent the closed end of the cap 27. The rod 26 is provided with a head 29 and is disposed within the casing. The head is normally maintained against the under side of the plate 21 by the spring 28. The plate 21 is provided with apertured ends 30 to receive bolts, not shown, to secure the switch assembly upon the floor board or any other suitable support.

The cup shaped housing 22 has its side walls provided with tangs 31 which provide the means for securing a closure member or switch back 32 of non-conducting material in cooperative relation with the casing 21. The back 32 carries terminal rivets 33 and 34 and a central terminal post or pivot 35. The rivets 33 and 34 are connected respectively with switch contacts 37 and 38 disposed within a circular groove, concentric with the terminal post 35, the bottom of which is defined by six equidistant serrations or teeth 39. As shown in the development view in Fig. 6 the contacts 37 and 38 cover two adjacent teeth 39, while a plate 40 is provided with two arms or contacts 41 and 42 joined together by a loop disposed about and in positive electrical engagement with the post 35. The arms 41 and 42 are disposed in two adjacent teeth 39 diametrically opposite the teeth 39 that receive the contacts 37 and 38. Thus two adjacent teeth 39 are covered with a contact member and are spaced by one uncovered tooth. The plate 40 is provided with an aperture having a plurality of notches 43 extending therefrom. The plate 40 is held upon the back 32 by a collar 44 provided by the post, the collar being larger in dimension than the aperture so as to engage the outer face of the plate to form the positive electrical engagement between the post 35 and the plate 40. The collar is deformed as at 45 to form keys or detents adapted to fit in the notches 43 to keep the post 35 from rotating relative to the plate 40. The loop portion plate 40 fits within a recess 50 of the support while the contact arms of step-like formation straddle a lug 51 so that each arm will extend into the tooth 39 adjacent each other. The plate 40 and contact arms 41 and 42 are

firmly held in non-rotative relation in their respective recesses by staking over a portion of the post 35 extending through the back and a metallic member 53, as at 52. The contacts 37 and 38 are also held firmly against the back 32 and in non-rotative relation in their respective recess by staking over a portion of their respective rivets 33 and 34 extending through the back and metallic members 33a and 34a, respectively. The free ends of the members 33a and 34a carry suitable screw terminals to which wires (not shown) leading to direction indicating lights are secured. The members 33a and 34a are prevented from turning relative to the back 32 by the lugs 32a formed integral with the back. The outer end of the member 53 is tapped to receive a screw to secure one end of a lead, not shown, said lead connecting the member 53 with the battery. One end of the member 53 engages the lug 32a to prevent the member 53 from rotating relative to the back 32.

A rigid bridging member 60 is rotatably supported upon the post 35 and is provided with six equidistant apertures 61 and three arcuate resilient fingers 62 which are normally located out of the plane of the bridging member 60. The fingers are adapted to extend into the groove 39 of the back 32 and are yieldingly held into engagement with certain of the contacts 37, 38, 41 and 42 and the uncovered teeth 39. The contacts 37, 38, 41 and 42 are engaged by the free ends of the fingers 62.

The bridging member 60 is given a step-by-step rotary motion in a counterclockwise direction as viewed in Fig. 3 or from left to right as viewed in Fig. 5 by a ratching mechanism including the apertures 61 of the bridging member 60. A ratchet pawl disc 65 is provided with three pawls 66 which are integral with the discs 65 and which are bent away from the plane of the discs as shown in Fig. 6 and in the development sectional view of the disc. The disc is also provided with an ear 67. The driving disc 65 is rotatably supported by the post 35 and is actuated by a U-shaped bracket 68 which is rotatably supported on the post 35. The U-shaped bracket has an arm 69 that is provided with an aperture 70 for receiving the ear 67. The arms of the bracket 68 carry a pin 71 which supports a non-conducting roller 72. The bracket is yieldingly urged in a clockwise direction by a spring 73 so that the roller normally bears against the head 29 of the rod 26 due to the tension of the spring 73. The spring 73 is located between the arms of the bracket and coiled about the post 35. The tension in the spring 73 is produced by having one end 74 of the spring under tension bearing against the pin 71 and the other end 75 passing through a slot 76 provided by the end of the rod located within the casing 21, see Fig. 3. The U-bracket 68 is maintained upon the post 35 by a suitable cotter pin 77 extending through apertures provided by the post 35.

A coiled spring 80 is interposed between the arm 69 of the U-bracket 68 and the driving disc member 65 and operates to yieldingly urge the members 65 and 60 toward the back 32 so as to maintain a good ratchet engagement between the members 65 and 60 and at the same time keep the fingers 62 within the groove 39 and against the contacts 37, 38, 41 and 42 when the fingers are so positioned that certain fingers will engage certain of the contacts to close a desired current.

It will be noted that the plate 40 is provided with two integral arms or contacts 41 and 42. This plate has a positive electrical connection with the post 35 which in turn is connected with the battery or other source of current therefore either the contact 41 or 42 is connected with the current source at all times. The contacts 37 and 38 are independent of each other, and either one of the contacts 37 and 38 are connected directly with the bright headlights, and the other one is connected with the dim headlights. Thus the bright and dim headlights will burn alternately, due to successive operation of the switch by the pedal 27.

As shown in Fig. 5, one of the three fingers 62 of the bridging member 60 is connected with contact 42 and the second finger 62 is connected with the contact 37 and since only one of the contacts 37 and 38 can be engaged by a finger 62 at the same time, contact 38 is not included in the circuit, thus the third finger 62 engages one of the bare teeth 39. When it is desired to connect the contact 38 in the circuit, the rod 26 is urged downwardly as viewed in Figs. 1, 2 and 3. The head 29 engages the roller 72 which in turn causes the U-shaped bracket and its associated parts to rotate in a counterclockwise direction against the tension of the spring until the bracket 68 is rotated approximately 60°. This motion will be transmitted from the bracket 68 to the driving washer 65 through the ear 70, which in turn will move the bridging member 60 through the pawls 66 engaging the flat edges of the apertures 61 causing the fingers 62 to be moved sufficiently to bring the fingers into the succeeding grooves 39. When this occurs the fingers 62 will be in engagement with the contacts 41 and 38 to complete a second circuit.

When the cap 27 is released, the spring 28 will move the rod 26 upwardly into its normal position as shown in Figs. 2 and 3. The driving washer 65 and the U-bracket 68 will also be returned to their normal position by the spring 73, but the bridging member will remain in the last mentioned position since it cannot rotate in a clockwise direction, due to the engagement of the fingers 62 engaging shoulders provided by the teeth of the groove 39. Therefore successive operations of the rod 26 will cause the bridging member 60 to connect the plate 40 alternately with the contacts 37 and 38.

While the embodiment of the present invention as herein disclosed, constitutes a preferred form, it is to be understood that other forms might be adopted, all coming within the scope of the claims which follow.

What is claimed is as follows:

1. In an electric switch of the class described, the combination comprising; a non-conducting support carrying a terminal post, said support having a plurality of arc-shaped ratchet recesses arranged concentric with the post; a pair of stationary contacts fixed to the support, each contact having an arm disposed in two adjacent recesses; a third stationary contact fixed to the support and having a positive electrical connection with the post, said contact having a pair of integral arms disposed in two adjacent recesses opposite the first-mentioned recesses to provide a plain recess between stationary contacts and the arms, a rigid bridging member rotatably supported by the post and having a plurality of contact fingers, said fingers operating to connect one of the first-mentioned contacts with the third-mentioned contacts to complete a circuit; means for producing a step-by-step rotation of the bridging member in one direction only to alter-

nately connect one of the first-mentioned contacts with the third-mentioned contact to close a selective circuit; and spring means for urging the bridging member toward the support there being a stop in each recess in which one of the stops is engaged by one of the fingers to prevent a return movement of the bridging member when same is moved in the direction to close a circuit.

2. In an electric switch of the class described, the combination comprising; a non-conducting terminal block carrying a terminal post, said block having a circular row of detents concentric with the post on one face of the block; a pair of stationary contacts attached to the block and extending into adjacent detents; a third contact provided with a loop portion positively connected with the post and having a pair of integral contact members extending from the loop portion and into adjacent detents opposite the first mentioned detents to provide for a plain detent between each pair of detents having contact elements therein; a bridging member rotatably supported on the post and having fingers adapted to engage some of the contacts to close a circuit; means for rotating the bridging member in one direction only, there being a stop in each recess in which one of the stops is engaged by one of the fingers to prevent a return movement of the bridging member when the member is turned in one direction to close the circuit; and means for urging the bridging member toward the block.

3. In an electric switch of the class described, the combination comprising; a non-conducting support carrying a terminal post and having a plurality of arc-shaped ratchet recesses on the face of the support and arranged concentric with the post; a pair of terminal contacts disposed in two adjacent recesses; a conducting plate fixed to the support by the post to provide a positive connection between the terminal post and the plate, said plate having a pair of radial contact arms disposed in two adjacent recesses and arranged with respect to the terminal contacts to expose a plain recess between the terminal contacts and the contact arms; a bridging member rotatably supported on the post and adapted to be rotated in one direction only, said member having a plurality of fingers and arranged so that one finger will engage one of the terminal contacts, another finger engaging a plain recess and a third finger engaging one of the contact arms on each step-by-step rotation of the bridging member in one direction only, there being a stop in each recess in which one of the stops is engaged by one of the fingers to prevent a return movement of the bridging member when the same is moved in the direction to close a circuit.

4. In an electric switch of the class described the combination comprising; a non-conducting support having a circular row of detents on one face of the support; a pair of spring terminals supported on the support beyond the circular row of detents, said terminals having contact elements extending into adjacent detents; a conducting plate provided with a pair of radial contact elements extending into adjacent detents opposite the first mentioned detents to provide for a plain detent between each pair of detents having contact elements therein; a terminal post having a positive electrical engagement with the plate, said post securing the plate to the support within the circular row of detents; a bridging member rotatably supported on the post and having fingers adapted to engage some of the contact elements to close a circuit on each movement of the bridging member; and means for rotating the bridging member in predetermined steps of rotation in one direction only.

WILLIAM C. EDWARDS.