(12) INTERNATIONAL APPLICATION PUBLISHED UNDER THE PATENT COOPERATION TREATY (PCT)

(19) World Intellectual Property Organization
International Bureau

(43) International Publication Date
22 May 2008 (22.05.2008)

PCT

(10) International Publication Number
WO 2008/058397 A1

(51) International Patent Classification:
B23Q 3/00 (2006.01) *H01L 21/477* (2006.01)
F27D 5/00 (2006.01) *H01L 21/683* (2006.01)
H01L 21/324 (2006.01)

(21) International Application Number:
PCT/CA2007/002070

(22) International Filing Date:
15 November 2007 (15.11.2007)

(25) Filing Language: English

(26) Publication Language: English

(30) Priority Data:
60/858,946 15 November 2006 (15.11.2006) US

(71) Applicant *(for all designated States except US)*: **MATTSON TECHNOLOGY CANADA, INC.** [CA/CA]; 3-605 West Kent Avenue, Vancouver, British Columbia V6P 6T7 (CA).

(72) Inventors; and
(75) Inventors/Applicants *(for US only)*: **CAMM, David, Malcolm** [CA/CA]; 3755 West 14th Avenue, Vancouver, British Columbia V5R 2W8 (CA). **CIBERE, Joseph** [CA/CA]; 4890 RidgeLawn Drive, Burnaby, British Columbia v5c 3y2 (CA). **BUMBULOVIC, Mladen** [CA/CA]; 701-1288 Marinaside Crescent, Vancouver, British Columbia V6Z 2W5 (CA).

(74) Agents: **FERANCE, Stephen, J.** et al.; Smart & Biggar, Box 11560, Vancouver Centre, 650 W. Georgia Street, Suite 2200, Vancouver, Britisn Columbia V6B 4N8 (CA).

(81) Designated States *(unless otherwise indicated, for every kind of national protection available)*: AE, AG, AL, AM, AT, AU, AZ, BA, BB, BG, BH, BR, BW, BY, BZ, CA, CH, CN, CO, CR, CU, CZ, DE, DK, DM, DO, DZ, EC, EE, EG, ES, FI, GB, GD, GE, GH, GM, GT, HN, HR, HU, ID, IL, IN, IS, JP, KE, KG, KM, KN, KP, KR, KZ, LA, LC, LK, LR, LS, LT, LU, LY, MA, MD, ME, MG, MK, MN, MW, MX, MY, MZ, NA, NG, NI, NO, NZ, OM, PG, PH, PL, PT, RO, RS, RU, SC, SD, SE, SG, SK, SL, SM, SV, SY, TJ, TM, TN, TR, TT, TZ, UA, UG, US, UZ, VC, VN, ZA, ZM, ZW.

(84) Designated States *(unless otherwise indicated, for every kind of regional protection available)*: ARIPO (BW, GH, GM, KE, LS, MW, MZ, NA, SD, SL, SZ, TZ, UG, ZM, ZW), Eurasian (AM, AZ, BY, KG, KZ, MD, RU, TJ, TM), European (AT, BE, BG, CH, CY, CZ, DE, DK, EE, ES, FI, FR, GB, GR, HU, IE, IS, IT, LT, LU, LV, MC, MT, NL, PL, PT, RO, SE, SI, SK, TR), OAPI (BF, BJ, CF, CG, CI, CM, GA, GN, GQ, GW, ML, MR, NE, SN, TD, TG).

Published:
— *with international search report*

(54) **Title:** SYSTEMS AND METHODS FOR SUPPORTING A WORKPIECE DURING HEAT-TREATING

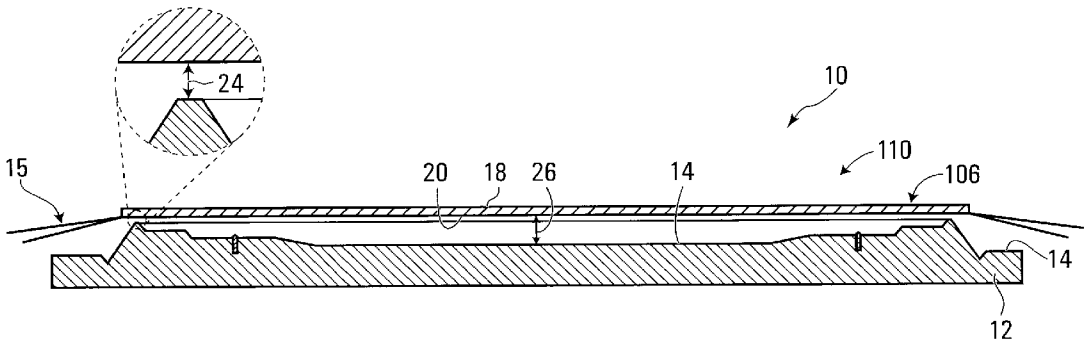

(57) **Abstract:** An apparatus for supporting a workpiece during heat-treating includes a support plate having a non-planar upper surface, and a support system. The support system is configured to support the workpiece above the support plate during heat-treating of the workpiece, such that a lower surface of an initial shape of the workpiece is supported at a non-uniform spacing above the non-planar upper surface of the support plate, said non-uniform spacing including an edge gap beneath an outer perimeter of the workpiece, and a central gap at a central axis of the workpiece.

WO 2008/058397 A1

SYSTEMS AND METHODS FOR SUPPORTING A WORKPIECE DURING HEAT-TREATING

BACKGROUND OF THE INVENTION

1. Field of Invention

The present invention relates to heat-treating, and more particularly to systems and methods for supporting a workpiece during heat-treating thereof.

2. Description of Related Art

Numerous applications involve heat-treating a workpiece. For example, in the manufacture of semiconductor chips such as microprocessors, the workpiece typically includes a semiconductor wafer, supported in a thermal processing chamber for annealing or other heat-treating purposes. Commonly owned United States Patent Application Serial No. **11/018,388** (publication no. US **2005/0133167**, hereby incorporated herein by reference) discusses examples of heat-treating techniques for annealing such semiconductor wafers, in which the wafer is first pre-heated to an intermediate temperature, following which the top or device side surface is rapidly heated to an annealing temperature. The initial pre-heating stage occurs at a rate significantly slower than a thermal conduction time through the wafer, and may be achieved by irradiating the back-side or substrate side of the wafer with an arc lamp or other irradiance device, to heat the wafer at a ramp rate less than **400**ºC per second, for example. The subsequent surface heating stage occurs much more rapidly than the thermal conduction time through the wafer, so that only the device side surface is heated to the final annealing temperature, while the bulk of the wafer remains close to the cooler intermediate temperature. Such surface heating may be achieved by exposing the device-side surface to a high-power irradiance flash from a flash-lamp or bank of flash lamps, the flash having a relatively short duration, such as one millisecond, for example. The cooler bulk of the wafer then acts as a heat sink to facilitate rapid cooling of the device side surface.

Such annealing methods, which involve rapidly heating the device side of the wafer to a substantially higher temperature than the bulk of the wafer, tend to cause the device side to thermally expand at a greater rate than the rest of the wafer. Depending on the magnitude of the temperature difference between the device side temperature and the temperature of the bulk of the wafer, this may tend to cause "thermal bowing", whereby the normally planar wafer deforms itself into a thermally deformed shape. Depending on the magnitude and rapidity of the device side heating stage, the thermally deformed shape may have attributes of a dome shape, with the center of the wafer tending to rapidly rise relative to its edge regions. The thermal bowing may also cause the outer perimeter or edge of the workpiece (such as the outer two or four centimeters of a **30**-cm diameter wafer, for example) to curl downward steeply, and thus, the thermally deformed shape may also have attributes of a saucer shape similar to a FRISBEE™ flying disc. In practice, for some applications it has been found that the latter curling effect at the outer perimeter of the workpiece tends to be more pronounced than the former dome-shaped curvature of the workpiece as a whole, although this may depend on the physical parameters of the thermal cycle in question. The thermally deformed shape represents a reduced stress configuration of the wafer, lowering the thermal stress resulting from the temperature gradient between the device side and the bulk of the wafer, and it is therefore undesirable to rigidly prevent this thermally induced motion.

Due to the extreme rapidity at which the device side of the wafer is heated (in the course of a **1**-millisecond flash, for example, much faster than a typical thermal conduction time in the wafer), the deformation of the wafer may occur sufficiently rapidly that the edges of the wafer tend to move rapidly downward. If the wafer is supported by conventional support pins near its edges, the thermal bowing of the wafer may apply large downward forces to the support pins, potentially damaging or destroying both the pins and the wafer. Such forces may also cause the wafer to launch itself vertically upward from the support pins, which may result in further damage to the wafer as the wafer

falls back down and strikes the pins. If the wafer is supported by support pins located further radially inward, the edges of the wafer may rapidly bow downward and strike a support plate above which the wafer is supported, potentially damaging or destroying the wafer. In addition, due to the rapidity at which such thermal bowing occurs, the initial velocities imparted to the various regions of the wafer tend to cause the wafer to overshoot the equilibrium minimum stress shape and rapidly oscillate or vibrate, resulting in additional stress and potentially damaging or destroying the wafer.

The above-noted US patent application publication no. US **2005/0133167** discloses, among other things, methods and apparatuses for suppressing thermally induced motion of a workpiece. In one such method, a damping member is spaced apart from the workpiece and is configured to apply a damping force to dampen the motion of the workpiece. In a particular illustrative embodiment, the damping member includes a quartz plate, the workpiece includes a semiconductor wafer, and the quartz plate is spaced apart from an initial position or rest position of the wafer by a distance sufficiently small that gas pressure between the quartz plate and the wafer opposes the thermally induced motion of the workpiece. For example, the quartz plate and the wafer may be spaced apart by only a distance of about one millimeter. In such a case, the irradiance flash may cause the central region of the wafer to rapidly rise upward away from the quartz plate, thereby creating a low gas pressure zone in the gap between the wafer and the plate. Thus, a pressure differential is created, between the higher ambient pressure above the wafer, and the lowered pressure in the gap beneath the wafer, which tends to oppose the upward motion of the wafer. Conversely, if the central region of the wafer comes back downward and overshoots its equilibrium position, this creates a higher pressure in the gap between the wafer and the plate than the ambient pressure above the wafer, so that the pressure differential continuously opposes the motion of the wafer as it oscillates or vibrates. Thus, motion and vibration of the wafer are dampened,

without the necessity of potentially damaging physical contact between the wafer and the damping member.

SUMMARY OF THE INVENTION

The present inventors have appreciated that further improvements in damping such thermally induced motion and vibration while still permitting the wafer to thermally deform to reduce its internal thermal stress are desirable, to further reduce the likelihood of wafer damage or breakage.

In addition, the present inventors have also appreciated the significance of a "first wafer" effect and its impact on repeatability or consistency of successive thermal cycles performed with a particular heat-treating apparatus. In this regard, in heat-treating systems similar to those disclosed in US **2005/0133167** that rely on gas pressure between the damping plate and the wafer to suppress thermally induced wafer motion and vibration, due to the close spacing (e.g. **1** mm) between the damping plate and the wafer, thermal conduction between the plate and the wafer is considerably more significant than in systems employing larger spacing. Prior to commencement of heat-treating of the first wafer in such an apparatus, the quartz plate is initially cold, in thermal equilibrium with its surroundings. As heat-treating commences, the quartz plate begins to heat up, but typically does not heat up uniformly. Rather, partly due to edge effects of both the plate and the wafer, a thermal gradient develops in the plate, with the plate's central region being hottest, and progressively cooler temperatures being encountered moving radially outward toward its outer edge. The plate will be cooler than the wafer throughout the entire first cycle, and even as the plate heats up over repeated cycles, it will be cooler than the wafer throughout all except the commencement of the wafer's thermal cycle. Thermal conduction between the wafer and the plate is proportional to the temperature difference between them, and is inversely proportional the distance or separation between the two. Thus, if the spacing between the plate and the wafer is uniform, but the temperature difference between the hotter wafer and the cooler plate is greater at the outer regions than at the center, then the plate will conductively remove

more heat energy from the outer regions of the wafer than from the center of the wafer. This may contribute to an undesirable thermal gradient in the wafer itself, causing thermal stress and potential stress damage in the wafer. Although this effect may be less significant in conventional systems in which the wafer is spaced far apart from the support plate (in which case conduction may be less significant than radiative transfer between the plate and wafer), this effect may become quite significant in systems in which the plate is closely spaced from the wafer (e.g. 1 mm) in order to rely on gas pressure therebetween to dampen thermally induced wafer motion and vibration. In the latter types of systems, due to the close spacing between the wafer and the plate, thermal conduction may account for a comparable or even a greater amount of the total heat transfer between the wafer and plate than radiative transfer. Thus, in such close-spaced systems, the non-uniform conductive heat loss from the wafer resulting from the non-uniform temperature distribution in the plate tends to produce significantly greater thermal gradients, with correspondingly greater thermal stress. These undesirable effects typically tend to persist over a number of thermal cycles, thereby subjecting a number of successive wafers to such thermal stress and potential damage, until the plate eventually approaches thermal equilibrium.

In accordance with an illustrative embodiment of the invention, there is provided an apparatus for supporting a workpiece during heat-treating thereof. The apparatus includes a support plate having a non-planar upper surface, and a support system. The support system is configured to support the workpiece above the support plate during heat-treating of the workpiece, such that a lower surface of an initial shape of the workpiece is supported at a non-uniform spacing above the non-planar upper surface of the support plate, said non-uniform spacing including an edge gap beneath an outer perimeter of the workpiece, and a central gap at a central axis of the workpiece.

Advantageously, providing such non-uniform spacing between a non-planar upper surface of the support plate and the workpiece allows numerous advantages to be achieved, in comparison with prior systems employing

planar support plates uniformly spaced from the initial shape of the workpiece. For example, in embodiments in which the workpiece is a semiconductor wafer, the non-planar shape and corresponding non-uniform spacing from the initial shape of the workpiece may be configured to minimize spatial variations in heat loss rates across the workpiece when an expected non-uniform temperature distribution exists in the support plate, thereby addressing the "first wafer" effect. Alternatively, or in addition, the non-planar shape may be configured to control contact between the workpiece and the support plate when the workpiece thermally deforms to an expected thermally deformed shape, thereby preventing physical damage to or breakage of the workpiece. Alternatively, or in addition, the upper surface may be configured to be spaced from the expected thermally deformed shape of the workpiece by a distance sufficiently small that gas pressure between the workpiece and the plate opposes thermally induced motion of the workpiece, thereby damping thermally induced vibration of the workpiece while still allowing the workpiece to thermally deform to reduce its internal stress, thus further reducing the likelihood of damage to the workpiece.

Similarly, such embodiments may also provide significant advantages over prior systems employing non-planar supports. For example, a recently published approach purports to support a semiconductor wafer by resting the outer circumferential edge of the wafer upon an annular step, with the central region of the wafer being supported above a concave recess circumscribed by the annular step. However, supporting the wafer directly upon a rigid annular step during flash heating may cause breakage or damage, as the initial thermal bowing causes the wafer to apply a very large downforce at its outer perimeter where it is supported by the rigid annular step. As a result, the wafer may be subjected to excessive thermal stress, particularly during the first few hundred microseconds after commencement of the flash. The wafer may even launch itself vertically upward in order to be able to thermally deform itself to reduce its internal stress, causing elevated risks of breakage or damage at the times that the wafer self-launches and lands again.

Advantageously, the existence of an edge gap allows any contact between the outer perimeter of the workpiece and the support plate to be controlled, so that the wafer is permitted to initially reduce its stress by thermally bowing but without launching itself up in the air. The existence of such an edge gap also allows the magnitude and timing of shock waves resulting from the impact to be controlled in order to further reduce the likelihood of breakage or damage, as discussed in greater detail herein.

The edge gap may be in the range of about $3x10^{-4}$ m to about $1.2\ x10^{-3}$ m. For example, the edge gap may be about one-half millimeter.

The central gap may be in the range of about $1.2\ x10^{-3}$ m to about $2.5\ x10^{-3}$ m.

The support system may include a plurality of flexible support members. For example, the plurality of flexible support members may include a plurality of quartz fibers.

Alternatively, the support system may include a plurality of support pins.

The edge gap and the central gap may be unequal. For example, the edge gap may be larger than the central gap. As a more particular example, the edge gap may be at least twice as large as the central gap, or at least three times as large as the central gap. Alternatively, the central gap may be larger than the edge gap.

The non-uniform spacing may minimize spatial variations in heat loss rates across the workpiece when an expected non-uniform temperature distribution exists in the support plate.

The non-uniform spacing may generally vary as a non-decreasing function of the radial distance. For example, the non-uniform spacing may be

substantially constant at less than a threshold radial distance from the central axis of the workpiece and may generally increase as a function of radial distance from the threshold radial distance to a radius of the workpiece.

The central gap may be less than or equal to about one millimeter and the edge gap may be more than about two millimeters, for example.

The non-planar upper surface of the support plate may have a shape complementary to an expected thermally deformed shape of the workpiece.

For example, at least some of the upper surface of the support plate may be generally dome-shaped. As a further example, at least some of the upper surface of the support plate may be generally saucer-shaped. As a further example, at least some of the upper surface of the support plate may be generally frustoconical-shaped.

An inner region of the upper surface of the support plate may be generally concave, and an outer region of the upper surface of the support plate may be generally convex.

The upper surface of the support plate may extend outwardly and downwardly, from the central axis to the outer perimeter of the workpiece.

The upper surface of the support plate may include a contact portion configured to be struck by an outer perimeter of the workpiece during heat-treating thereof. The contact portion may be configured to apply a reaction force having a radially inward component to the outer perimeter of the workpiece in reaction to the outer perimeter of the workpiece striking the contact portion. The contact portion may be angled relative to an adjacent inward portion of the upper surface.

The upper surface of the support plate may be configured to be spaced from an expected thermally deformed shape of the workpiece by a distance sufficiently small that gas pressure between the upper surface and the expected thermally deformed shape of the workpiece opposes thermally induced motion of the workpiece. For example, the upper surface of the support plate may be configured to be spaced from the expected thermally deformed shape of the workpiece by a distance on the order of one millimeter.

The support plate may include a gas flow barrier configured to resist gas flow through a gap between the upper surface and the workpiece when the workpiece is supported above the support plate.

The gas flow barrier may include a turbulence generator. For example, the turbulence generator may include an annular channel defined in the upper surface of the support plate.

The support plate may include a removable portion including at least some of the upper surface of the support plate. For example, the support plate may include a lower portion and an upper portion, and the removable portion may include the upper portion.

The apparatus may further include a second upper portion having a differently shaped upper surface, and the second upper portion may be interchangeable with the upper portion to change a shape of the upper surface of the support plate.

The apparatus may further include a plurality of upper portions each having a uniquely shaped upper surface, and each of the plurality of upper portions may be interchangeable with the upper portion to change a shape of the upper surface of the support plate.

The removable portion may include a removable edge portion and a removable central portion.

The edge gap and the central gap may be adjustable.

The support plate may include a lensing portion configured to provide a desired lensing effect to electromagnetic radiation being transmitted through the support plate to the workpiece.

The apparatus may further include a second plate disposed above a plane at which the apparatus is configured to support the initial shape of the workpiece.

The apparatus may further include a heat-treating system configured to thermally induce motion of the workpiece. For example, the heat-treating system may be configured to pre-heat the workpiece to an intermediate temperature, and may be configured to heat only a surface region of the workpiece to a desired temperature greater than the intermediate temperature in less than a thermal conduction time of the workpiece.

In accordance with another illustrative embodiment of the invention, there is provided an apparatus for supporting a workpiece during heat-treating thereof. The apparatus includes a support plate having a non-planar upper surface. The apparatus further includes means for supporting the workpiece above the support plate during heat-treating of the workpiece, such that a lower surface of an initial shape of the workpiece is supported at a non-uniform spacing above the non-planar upper surface of the support plate, the non-uniform spacing including an edge gap beneath an outer perimeter of the workpiece, and a central gap at a central axis of the workpiece.

In accordance with another illustrative embodiment of the invention, there is provided a method including supporting a workpiece above a non-planar

upper surface of a support plate during heat-treating of the workpiece, such that a lower surface of an initial shape of the workpiece is supported at a non-uniform spacing above the non-planar upper surface of the support plate, the non-uniform spacing including an edge gap beneath an outer perimeter of the workpiece, and a central gap at a central axis of the workpiece.

The edge gap may be in the range of about $3x10^{-4}$ m to about $1.2\ x10^{-3}$ mm and the central gap may be in the range of about $1.2\ x10^{-3}$ m to about $2.5\ x10^{-3}$ m, for example.

Supporting may include supporting the workpiece with a plurality of quartz fibers.

Supporting may include supporting the workpiece while heat-treating the workpiece, which may include thermally inducing motion of the workpiece. For example, thermally inducing motion of the workpiece may include heating only a surface region of the workpiece to a desired temperature in less than a thermal conduction time of the workpiece, thereby deforming the workpiece from the initial shape to a thermally deformed shape.

The non-uniform spacing may minimize spatial variations in heat loss rates across the workpiece when an expected non-uniform temperature distribution exists in the support plate.

Supporting may include supporting the thermally deformed shape of the workpiece above the upper surface of the support plate by a distance sufficiently small that gas pressure between the upper surface and the thermally deformed shape of the workpiece opposes thermally induced motion of the workpiece.

Other aspects and features of the present invention will become apparent to those ordinarily skilled in the art upon review of the following description of

specific embodiments of the invention in conjunction with the accompanying figures.

BRIEF DESCRIPTION OF THE DRAWINGS

In drawings which illustrate embodiments of the invention,

Figure **1** is a central cross-section of an apparatus for supporting a workpiece according to a first embodiment of the invention;

Figures **2**A-**2**E are schematic cross-sections of an initial shape and four thermally deformed shapes of a workpiece;

Figure **3** is a graph of number of workpiece breakages versus time of a thermal cycle;

Figure **4** is a central cross-section of an apparatus for supporting a workpiece according to a first embodiment of the invention;

Figure **5** is a central cross-section of an apparatus for supporting a workpiece according to a third embodiment of the invention;

Figure **6** is a central cross-section of an apparatus for supporting a workpiece according to a fourth embodiment of the invention;

Figure **7** is a central cross-section of an apparatus for supporting a workpiece according to a fifth embodiment of the invention;

Figure **8** is a central cross-section of an apparatus for supporting a workpiece according to a sixth embodiment of the invention;

Figure **9** is a central cross-section of an apparatus for supporting a workpiece according to a seventh embodiment of the invention;

Figure **10** is a central cross-section of an apparatus for supporting a workpiece according to an eighth embodiment of the invention;

Figure **11** is a central cross-section of an apparatus for supporting a workpiece according to a ninth embodiment of the invention;

Figure **12** is a central cross-section of an apparatus for supporting a workpiece according to a tenth embodiment of the invention;

Figure **13** is a front elevation view of an apparatus for supporting a workpiece according to an eleventh embodiment of the invention;

Figure **14** is a central cross-section of an apparatus for supporting a workpiece according to a twelfth embodiment of the invention; and

Figure **15** is a central cross-section of an apparatus for supporting a workpiece according to a thirteenth embodiment of the invention.

DETAILED DESCRIPTION

Referring to Figure **1**, an apparatus for supporting a workpiece during heat-treating according to a first embodiment of the invention is shown generally at **10**. The apparatus **10** includes a support plate **12** having a non-planar upper surface shown generally at **14**, and a support system shown generally at **15**. In this embodiment, the support system **15** is configured to support a workpiece **106** above the support plate **12** during heat-treatment of the workpiece, such that a lower surface **20** of an initial shape **110** of the workpiece **106** is supported at a non-uniform spacing above the non-planar upper surface **14** of the support plate **12**. More particularly, in this embodiment the non-uniform spacing includes an edge gap **24** beneath an outer perimeter of the workpiece, and a central gap **26** at a central axis of the workpiece.

In this embodiment, the workpiece **106** includes a semiconductor wafer, and the support plate **12** includes a quartz plate. More particularly, in this embodiment the semiconductor wafer is intended to be supported above the support plate while being heat-treated in a manner that thermally induces motion of the workpiece. More particularly still, as discussed earlier herein, while supported above the support plate **12**, the workpiece **106** is first pre-heated to an intermediate temperature, following which only an upper surface **18** of the workpiece is heated to a desired temperature greater than the intermediate temperature, in less than a thermal conduction time of the workpiece. As discussed earlier herein, such heat-treatment causes the

workpiece **106** to thermally deform from its initial shape **110** to an expected thermally deformed shape.

More particularly, referring to Figures **1** and **2**A-**2**E, in this embodiment the initial shape of the workpiece **106** is shown generally at **110** in Figure **2**A. In the present embodiment, the initial shape of the workpiece is disc-shaped. More particularly still, in this embodiment the workpiece **106** is a **300** mm diameter semiconductor wafer whose initial shape **110** is a planar disc, and four examples of expected thermally deformed shapes of the wafer are shown in Figures **2**B – **2**E, respectively.

In this embodiment, the four expected thermally deformed shapes shown in Figures **2**B – **2**E have been predicted by the present inventors. More particularly, such prediction has been achieved by using a high-speed camera and a calibrated imaging system to measure deformation characteristics of a **300** mm diameter semiconductor wafer similar to the workpiece **106**, being subjected to the same thermal cycle as that to which the workpiece **106** will be subjected. Alternatively, or in addition, the various expected thermally deformed shapes shown in Figures **2**B -**2**E may be generated using a thermal simulation, employing a developed finite element model. It is believed that detailed knowledge of the thermally deformed shapes shown in Figures 2B – 2E was not known in the art prior to the publication of the present patent specification.

Referring to Figures **2**A-**2**E, an illustrative thermal cycle involves pre-heating the workpiece **106** to an intermediate temperature, then heating only the upper surface **18** of the workpiece **106** to a desired temperature greater than the intermediate temperature. The latter surface heating step occurs within less than a thermal conduction time through the workpiece, and may be achieved, for example, by activating a flash lamp or bank of flash lamps. Initially, the workpiece **106** is in its planar initial shape **110** when it is subjected to the irradiance flash from the flash lamp(s), as shown in Figure

2A. The irradiance flash commences at time t=**0**, and has a duration on the order of one millisecond.

In the illustrative thermal cycle shown in Figures **2**A – **2**E:

- By time t=**0.8** ms after the commencement of the irradiance flash, the workpiece **106** thermally "bows" or deforms into a first thermally deformed shape **30** shown in Figure **2**B.
- By time t=**1.5** ms after the commencement of the irradiance flash, the workpiece thermally deforms into a second thermally deformed shape **32** shown in Fig. **2**C.
- By time t=**2.0** ms after the commencement of the irradiance flash, the workpiece thermally deforms into a third thermally deformed shape **34** shown in Fig. **2**D.
- By time t=**2.5** ms after the commencement of the irradiance flash, the workpiece thermally deforms into a fourth thermally deformed shape **36** shown in Fig. **2**E (which shape it will roughly assume again at t=**4.5** ms).

Alternatively, different thermally deformed shapes may be expected for different thermal cycles. Thus, variations in parameters of the thermal cycle (including, for example, the pulse duration and intensity of the irradiance flash) may cause variations in the thermally deformed shapes that are measured, simulated or expected.

Figure **3** illustrates workpiece breakages as a function of time, for an illustrative thermal cycle that does not employ an embodiment of the present invention to reduce such breakages.

Referring to Figures **2** and **3**, the present inventors have found that workpiece breakages tend to fall within two broad categories, which the present inventors have categorized as "Type I" and "Type II" breaks.

In the illustrative thermal cycle, "Type I" breaks accounted for a large majority of breakages, and tended to occur between t=**1** and t=**1.5** milliseconds after commencement of the flash, while the workpiece **106** was transitioning between the first thermally deformed shape **30** shown in Figure **2**B and its second thermally deformed shape **32** shown in Figure **2**C. In this regard, in the second thermally deformed shape **32**, a central region **33** of the workpiece is curved concavely so as to compress the upper surface **18** at the central region **33**, rather than convexly to relieve stress from the thermal expansion of the upper surface **18**. Thus, the central region **33** of the workpiece is under considerable stress, both from the rapid thermal expansion of the upper surface **18** and from the compression resulting from the curvature of the second thermally deformed shape **32** at the central region **33**. If strong shock waves from an earlier initial impact of the outer edge of the workpiece **106** against the upper surface **18** are propagating through the central region **33** at the time that it is in the second thermally deformed shape **32**, an increased likelihood of "Type I" breakage arises. The present inventors have also found that wafer damage, such as scratches, for example, significantly increases the likelihood of Type I breaks. As particular examples, wafer damage in regions on the bottom of the wafer that undergo concave curvature that aggravates the stress of thermal expansion, or damage in regions on the bottom the wafer that impact the quartz plate, increase the likelihood of breakage.

"Type II" breaks tended to occur while the workpiece **106** was in its fourth thermally deformed shape **36** shown in Figure **2**E. In this shape, the workpiece **106** has transitioned from the third thermally deformed shape **34** shown in Figure **2**D, whose convex curvature alleviates the stress on the central region **33** resulting from the thermal expansion of the upper surface **18**, to the fourth thermally deformed shape **36**, whose concave curvature aggravates the stress of thermal expansion by placing the upper surface **18** under compression. If the central region **33** of the workpiece strikes the support plate **12** with sufficient force while in this fourth thermally deformed shape **36**, an increased likelihood of a "Type II" break may arise.

Referring back to Figure **1**, advantageously, the present embodiment reduces the likelihood of both "Type I" and "Type II" breaks, by virtue of the selected edge gap **24** and central gap **26**, which in this embodiment are unequal.

More particularly, to reduce "Type I" breaks in the present embodiment, the edge gap **24** is in the range of about $3x10^{-4}$ m to about $1.2\ x10^{-3}$ m. More particularly still, in this embodiment the edge gap **24** is about one-half millimeter. In this regard, the present inventors have found that such an edge gap assists in controlling the magnitude and timing of shock waves resulting from the initial impact of the outer perimeter of the workpiece **106** against the support plate **12** when the wafer initially thermally "bows" in response to the irradiance flash. If the edge gap **24** is too large, then the outer perimeter of the workpiece **106** might not strike the support plate **12** at all. Although conventional wisdom suggests that physical contact between a silicon wafer and other objects during heat-treating is undesirable, the present inventors have found that for some thermal cycles, preventing this initial impact of the outer perimeter of the workpiece onto the support plate disadvantageously results in increased overall wafer deformation, with increased likelihood of both Type I and Type II breaks. Conversely, if the edge gap is too small or no edge gap was provided at all, the workpiece may suffer very significant mechanical stress in the first few hundred microseconds, and if the workpiece is supported on a rigid surface or on rigid supports, the initial thermal bowing of the workpiece may be sufficiently violent to launch the workpiece vertically upward, with a significant likelihood of damage at the time the workpiece launches itself and again when it falls back down.

Advantageously, therefore, in the present embodiment, the selection of an edge gap **24** in the range of about $3x10^{-4}$ m to about $1.2\ x10^{-3}$ m, or more particularly, an edge gap **24** of about one-half millimeter, reduces the likelihood of Type I breaks. For the illustrative thermal cycle, the present inventors have found that such an edge gap **24** tends to result in the outer

perimeter of the workpiece **106** striking the upper surface **14** of the support plate somewhat before the outer perimeter of the workpiece reaches what otherwise would have been its maximum thermal bowing velocity induced by the irradiance flash. Thus, the initial impact of the outer perimeter of the workpiece onto the upper surface of the support plate advantageously dampens overall workpiece motion, thereby reducing the likelihood of Type I and Type II breaks in comparison with the absence of such an impact. This initial impact produces shock waves in the workpiece, but the shockwaves are not as intense as they would have been if the outer perimeter had reached its maximum possible velocity by the time of the impact. Also, the edge gap **24** is selected such that the timing of the impact ensures that the resulting shock waves travel through the central region **33** of the workpiece at a time when the workpiece is not in the second thermally deformed shape **32** shown in Figure **2**C. Thus, the likelihood of Type I breaks is significantly reduced. Alternatively, it will be appreciated that the optimum edge gap will depend upon the particular thermal cycle, workpiece and apparatus in question. Thus, for other examples or embodiments, other optimal values may be selected according to the teachings of the present specification, to achieve a desired balance between dampening overall workpiece motion, reducing the severity of and controlling the timing of shock waves.

To reduce the likelihood of "Type II" breaks, in the present embodiment the central gap **26** is in the range of about **1.2** $\times 10^{-3}$ m to about **2.5** $\times 10^{-3}$ m. More particularly, in this embodiment the central gap **26** is about one and one-half millimeters. In this regard, the present inventors have found that such a central gap **26** is advantageous for an illustrative thermal cycle, as it may achieve a desired balance between gas pressure damping and reducing the severity of contact between the central region **33** of the workpiece **106** and the support plate **12**. Gas pressure damping, as discussed in greater detail in the above-mentioned commonly owned U.S. patent application publication no. **2005/0133167**, involves spacing the workpiece apart from the support plate by a distance sufficiently small that gas pressure between the upper surface

of the support plate **12** and the lower surface **20** of the workpiece **106** opposes thermally induced motion of the workpiece. Thus, as the central gap **26** increases, its associated gas pressure damping effect diminishes, thereby increasing overall workpiece motion, with a greater resulting likelihood of breakage (Type I or II). Conversely, however, increasing the central gap **26** may reduce the severity or frequency of impacts of the central region, thereby preventing at least some Type II breaks that would have otherwise resulted from such impacts. Accordingly, for the illustrative thermal cycle of the present embodiment, the present inventors have found that a central gap **26** in the range of about **1.2** $x10^{-3}$ m to about **2.5** $x10^{-3}$ m tends to balance these considerations, resulting in an overall reduction in breakage likelihood. Alternatively, it will be appreciated that the optimum central gap will depend upon the particular thermal cycle, workpiece and apparatus in question. Thus, for other examples or embodiments, other optimal values may be selected according to the teachings of the present specification, to achieve a desired balance between gas-pressure damping of overall workpiece motion, and reducing the severity and frequency of impacts of the central region **33** onto the support plate **12**.

Referring back to Figure **1**, in this embodiment the support system **15** includes a plurality of flexible support members. More particularly, in this embodiment the plurality of flexible support members includes a plurality of quartz fibers. More particularly still, in this embodiment the plurality of quartz fibers includes a plurality of quartz fiber loops, similar to those described in commonly owned copending U.S. patent application no. **10/742,575** (publication no. US **2004/0178553**, hereby incorporated herein by reference), in connection with Figures **23** and **24** thereof. Alternatively, the support system may include a plurality of support pins, as discussed in connection with other embodiments below.

Referring to Figures **1** and **4**, an apparatus for supporting a workpiece during heat-treating according to a second embodiment of the invention is shown

generally at **40** in Figure **4** The apparatus **40** is similar to the apparatus **10** shown in Figure **1**, and includes a support plate **42** having a non-planar upper surface shown generally at **44**. The apparatus **40** further includes the support system **15**, which in this embodiment is configured to support the workpiece **106** above the support plate **42** during heat-treatment of the workpiece, such that the lower surface **20** of the initial shape of the workpiece is supported at a non-uniform spacing above the non-planar upper surface **44** of the support plate **42**. More particularly, in this embodiment the non-uniform spacing includes an edge gap **54** beneath an outer perimeter of the workpiece, and a central gap **56** at a central axis of the workpiece.

In the present embodiment, the edge gap **54** and the central gap **56** are adjustable. More particularly, in this embodiment the support plate **42** includes a removable portion comprising at least some of the upper surface **44** of the support plate. More particularly still, in this embodiment the removable portion includes a removable edge portion **58** and a removable central portion **60**.

In this embodiment, the removable edge portion **58** includes an annular quartz ring mounted on top of the support plate **42** by gravity or any other means suitable for heat-treatment and removability. The removable edge portion **58** can be replaced with other similar annular quartz rings (not shown) having different heights than the removable edge portion **58** shown in Figure **4**, thereby adjusting the edge gap **54**. In this embodiment, the edge gap **54** is measured as the local minimum of the non-uniform spacing between the upper surface **44** of the support plate **42** and the lower surface **20** of the workpiece **106**, beneath the outer perimeter of the workpiece. More particularly, in this embodiment, in which the workpiece is a semiconductor wafer, the outer perimeter of the workpiece includes an outer exclusion zone of the wafer, in which no devices are formed. In the present embodiment, the edge gap **54**, or more particularly the local minimum in the non-uniform spacing beneath the outer perimeter of the workpiece, occurs at r=**148** mm

from the central axis of the workpiece (i.e., **2** mm radially inward from the outermost circumference of the workpiece, at r=**150** mm). Advantageously, by placing the local minimum spacing at r=**148** mm, any contact between the outer perimeter of the workpiece and the upper surface of the support plate will tend to occur within or at the boundary of the outer exclusion zone of the workpiece, within which no devices are formed. Alternatively, however, the radial distance of the local minimum spacing and the edge gap measurement method may be varied, if desired.

Thus, in the present embodiment, by removing the removable edge portion **58** and replacing it with similarly shaped removable edge portions having different respective heights, the edge gap **54** can be adjusted. More particularly, in this embodiment there are ten such removable edge portions, which can be substituted for one another to vary the edge gap **54** from $3x10^{-4}$ m to $1.2\ x10^{-3}$ m, in increments of $1x10^{-4}$ m. Alternatively, or in addition, such removable edge portions may also be used to move the contact point (where the outer perimeter of the workpiece will impact the support plate) radially inward and outward, rather than merely upward or downward.

Also in this embodiment, the removable central portion **60** includes a planar quartz disc, mounted on top of the support plate **42** by gravity or any other means suitable for heat-treating and removability. The removable central portion **60** can be removed and replaced with other interchangeable removable planar quartz discs (not shown), having different heights than the removable central portion **60** shown in Figure **4**, thereby adjusting the central gap **56**. More particularly, in this embodiment there are fourteen such removable central portions **60**, which can be substituted for one another to vary the central gap **56** from $1.2\ x10^{-3}$ to $2.5\ x10^{-3}$ m, in increments of $1x10^{-4}$ m.

Alternatively, in other embodiments, the edge gap and the central gap may be variable over greater or smaller ranges, in coarser or finer increments. Or, as

a further alternative, the edge gap and the central gap may be varied by substituting different replaceable upper surfaces for substantially all of the upper surface **44** of the support plate **42**, as discussed below in connection with other embodiments.

In this embodiment, as the removable central portion **60** is disc-shaped, the spacing between the upper surface **44** of the support plate **42** and the lower surface **20** of the workpiece **106** is constant and is equal to the central gap **60** above the entire disc-shaped central portion **60**, which in this embodiment extends from the central axis of the workpiece (r=**0**) to about two-thirds of the radius of the workpiece (r=**100** mm). Extending radially outward beyond the outer boundary of the disc-shaped removable central portion **60**, from about r=**100** mm to about r=**125** mm, the upper surface **44** of the support plate **42** is then defined by an intermediate portion of the support plate **42**, to define an intermediate gap **62** between the upper surface **44** of the support plate and the lower surface **20** of the workpiece, in a zone interposed radially between the removable central portion **60** and the removable edge portion **58**. In this embodiment, the intermediate gap **62** is not adjustable, although it may be adjustable in other embodiments if desired. Extending radially outward beyond this intermediate portion, from about r=**125** mm to about r=**155** mm (slightly beyond the outer edge of the workpiece), the upper surface **44** of the support plate is then defined by an upper surface of the removable edge portion **58**, which defines the edge gap **54**.

Advantageously, the adjustability of the edge gap **54** and the central gap **56** in such an embodiment facilitates empirical testing of different edge gaps and central gaps, to identify the optimal edge gap and central gap values to minimize workpiece breakage for a particular thermal cycle, in accordance with the teachings of the present specification.

Referring to Figure **5**, an apparatus for supporting a workpiece during heat-treating according to a third embodiment of the invention is shown generally at

100. In this embodiment, the apparatus **100** includes a support plate **102** having a non-planar upper surface shown generally at **104**, and a support system. In this embodiment, the support system is configured to support the workpiece **106** above the support plate **102**, such that the lower surface **20** of the initial shape **110** of the workpiece **106** is supported at a non-uniform spacing above the non-planar upper surface **104** of the support plate. This non-uniform spacing includes an edge gap **114** beneath an outer perimeter of the workpiece, and a central gap **118** at a central axis of the workpiece.

In this embodiment, the workpiece **106** includes a semiconductor wafer, and the support plate **102** includes a quartz plate. More particularly, in this embodiment the semiconductor wafer is intended to be supported above the support plate while being heat-treated in a manner that thermally induces motion of the workpiece. More particularly still, as discussed earlier herein, while supported above the support plate **102**, the workpiece **106** is first pre-heated to an intermediate temperature, following which only the upper surface **18** of the workpiece is heated to a desired temperature greater than the intermediate temperature, in less than a thermal conduction time of the workpiece. As discussed earlier herein, such heat-treatment causes the workpiece **106** to thermally deform from its initial shape **110** to an expected thermally deformed shape such as that shown at **112** in Figure **5** (or at **30**, **32**, **34** and **36** in Figures **2**B-**2**E), for example. Alternatively, however, different types of workpieces, support plates and heat-treating methods may be substituted.

In the present embodiment, the upper surface **104** is configured such that the edge gap **114** is larger than the central gap **118**. More particularly, in this embodiment the edge gap **114** is at least twice as large as the central gap **118**. More particularly still, in this embodiment the edge gap **114** is at least three times as large as the central gap **118**.

In this embodiment, the central gap **118** is less than or equal to about one millimeter. More particularly, in this embodiment the central gap **118** is one millimeter, and the edge gap **114** is three millimeters. Alternatively, other non-uniform spacing relationships between the upper surface **104** and the initial shape of the workpiece **106** may be substituted if desired.

Advantageously, in the present embodiment the upper surface **104** is shaped to counteract the "first wafer" effect discussed earlier herein, which in conventional systems would tend to produce an undesirably large temperature gradient in the workpiece **106**. To achieve this, in this embodiment the non-uniform spacing between the lower surface **20** of the workpiece and the non-planar upper surface **104** of the support plate minimizes spatial variations in heat loss rates across the workpiece **106** when an expected non-uniform temperature distribution exists in the support plate **102**.

In this regard, in the present embodiment, the heat loss mechanisms experienced by the workpiece **106** include both radiative losses and conductive heat transfer between the workpiece **106** and the upper surface **104**. Although conductive heat transfer may be significantly less than radiative heat losses in conventional systems in which the workpiece is spaced far apart from the support plate, conductive heat transfer may be comparable to or in some cases greater than radiative heat losses in the illustrative embodiments discussed herein, in which the workpiece is closely spaced from the support plate. Conductive heat transfer between the workpiece **106** and the upper surface **104** is directly proportional to the temperature difference between the workpiece and the upper surface **104**, and is inversely proportional to the spacing between the workpiece and the upper surface **104**. In contrast, as a first-order approximation, the rate of radiative heat loss does not vary with the spacing between the workpiece and the upper surface **104** (although this first-order approximation becomes less accurate at the outer edges of the workpiece).

In this embodiment, the expected non-uniform temperature distribution in the support plate **102** includes a temperature which is roughly constant over an inner or central region of the support plate, and which decreases as radial distance from the central region increases. As discussed earlier herein, the support plate **102** will typically be cooler than the workpiece **106** during heat-treating thereof, and the temperature distribution in the support plate **102** is expected to be colder and more non-uniform during the first heat-treating cycle than in subsequent cycles. Thus, if the upper surface of the support plate was planar and uniformly spaced from the initial shape **110** of the workpiece, this non-uniform temperature distribution in the support plate would tend to thermally conduct a larger amount of heat energy away from the outer region of the workpiece **106** than from the inner region of the workpiece during the pre-heating stage, thereby producing a temperature gradient in the workpiece **106**, which in turn would generate thermal stress within the workpiece.

To reduce the magnitude of such thermal gradients and thermal stress, in the present embodiment the upper surface **104** of the support plate **102** is configured such that the non-uniform spacing between the upper surface **104** of the support plate and the lower surface **20** of the initial shape **110** of the workpiece **106** varies as a function of radial distance from a central axis of the workpiece. More particularly, in this embodiment the non-uniform spacing generally varies as a non-decreasing function of the radial distance. More particularly still, in this embodiment, the central gap **118** is less than or equal to about one millimeter and the edge gap **114** is more than about two millimeters.

In this embodiment, the non-uniform spacing between the upper surface **104** of the support plate **102** and the lower surface **20** of the initial shape **110** of the workpiece **106** is substantially constant at less than a threshold radial distance from the central axis of the workpiece, and generally increases as a

function of radial distance from the threshold radial distance to a radius of the workpiece. In this embodiment, the threshold radial distance is about half the radius of the workpiece. More particularly, in the present embodiment the workpiece **106** is a disc-shaped semiconductor wafer having a radius of **150** mm, and the upper surface **104** includes a disc-shaped planar central region **107** and a non-planar substantial portion **108**. In this embodiment the disc-shaped planar central region of the upper surface **104** extends radially outward from a center of the upper surface (radial distance r=**0**) above which a center of the workpiece is supported, to the threshold radial distance, which in this embodiment is half the radius of the workpiece, r=**75** mm. Also in this embodiment, the non-planar substantial portion **108** of the upper surface **104** extends from the circular boundary of the disc-shaped planar central region at r=**75** mm, and curves downward as it extends radially outward to a radial distance of r=**150** mm.

In the present embodiment, the spacing between the non-planar substantial portion **108** and the initial shape of the workpiece **106** ranges from a vertical distance of **1** mm at r=**75** mm to a vertical distance of **3** mm at r=**150** mm. Advantageously, such a spacing relationship tends to counteract the "first wafer" effect discussed earlier herein. In this regard, it will be recalled that the rate of thermal conduction between the workpiece **106** and the support plate **102** is directly proportional to the temperature difference ΔT between them, and is inversely proportional to the spacing S between them. As the expected non-uniform temperature distribution in the support plate **102** is expected to be cooler than the temperature of the workpiece **106** during the pre-heating stage, and the temperature of the upper surface **104** is expected to decrease with increasing radial distance from its disc-shaped central region, the temperature difference $\Delta T(r)$ between the upper surface **104** and the workpiece **106** is expected to generally increase with radial distance r, as r ranges from the radial distance of r=**75** mm at the boundary of the disc-shaped central region to the radial distance of r=**150** mm at the outer perimeter of the workpiece. In this embodiment, to prevent this spatially

increasing temperature difference ΔT(r) from translating into spatially increasing thermal conduction, the vertical spacing S(r) between the upper surface **104** and the workpiece **106** also increases with radial distance r over the substantial portion **108** of the upper surface **104** (i.e., from r=**75** to r=**150** mm), so that ΔT(r) / S(r) remains approximately constant for all r, thereby tending to maintain approximately constant thermal conduction rates between the upper surface **104** and the workpiece **106**. As noted, as a first-order approximation, the rate of radiative heat loss from the workpiece **106** is approximately independent of the vertical spacing between the upper surface **104** and the workpiece **106**. Thus, in the present embodiment, the tendency of the expected non-uniform temperature distribution in the support plate **102** to induce a thermal gradient in the workpiece **106** is significantly reduced, thereby significantly reducing thermal stress in the workpiece **106**.

Alternatively, if desired, rather than seeking to maintain ΔT(r)/S(r) constant thereby maintaining constant thermal conduction loss rates, the upper surface **104** may be shaped to even more accurately maintain constant heat loss rates across the entire workpiece **106**. For example, the spacing S(r) may be controlled to maintain R(r) + ΔT(r)/S(r) constant, where R(r) is a more accurate prediction of the actual total heat loss experienced by the workpiece **106** as a function of radial distance r. If desired, R(r) may take into account "edge effects" whereby the workpiece tends to lose more energy at its outer edges via radiation, conduction and convection, due to the greater exposed surface area per unit mass at the outer edges. In such an embodiment, the upper surface **104** may be configured so that the spacing S(r) between the upper surface **104** and the initial shape **110** of the workpiece causes correspondingly greater conductive heat losses at inner regions of the workpiece than at its edges, resulting in a non-uniform conduction rate distribution to compensate for the non-uniform energy loss rate distribution that would otherwise have existed, thereby arriving at a substantially uniform total heat loss rate across the workpiece.

Referring to Figures **2** and **5**, the relatively small size of the central gap **118** (one millimeter) in the present embodiment may result in an increased chance that the central region **33** of the workpiece **106** will impact upon the upper surface **104** of the support plate **102**, when the workpiece **106** assumes the fourth thermally deformed shape **36** shown in Figure **2**E. However, the same small size of the central gap **118** also results in enhanced compensation for the "first wafer" effect as discussed above, as well as enhanced gas-pressure damping of workpiece motion by gas pressure between the workpiece and the support plate, as discussed in greater detail in the above-noted commonly owned U.S. patent publication no. US **2005/0133167**. Accordingly, while the latter benefits are deemed to outweigh the impact risk in the present embodiment, the same balancing may not be true for different embodiments with different thermal cycles and potentially more violent impacts between the central region **33** of the workpiece **106** and the support plate **102**.

In the present embodiment, the substantial portion **108**, which is non-planar and is configured to be non-uniformly spaced from the initial shape **110** of the workpiece, includes a portion of the upper surface above which an outermost one-sixth of the area of the workpiece is to be supported. More expansively, in this embodiment the substantial portion **108** of the upper surface **104** includes a portion of the upper surface above which an outermost one-fifth of the area of the workpiece is to be supported. More expansively still, in this embodiment the substantial portion **108** includes a portion of the upper surface above which an outermost one-quarter of the area of the workpiece is to be supported. More expansively still, in this embodiment the substantial portion **108** includes a portion of the upper surface above which an outermost one-third of the area of the workpiece is to be supported. More expansively still, in this embodiment the substantial portion includes a portion of the upper surface above which an outermost one-half of the area of the workpiece is to be supported. More expansively still, in this embodiment the substantial portion **108** includes a portion of the upper surface above which an outermost two-thirds of the area of the workpiece is to be supported. More expansively

still, in this embodiment the substantial portion **108** includes a portion of the upper surface above which an outermost three-quarters of the area of the workpiece is to be supported. In this regard, it will be recalled that in the present embodiment, the non-planar substantial portion **108** extends from a radial distance of r=**75** mm from the central axis of the workpiece, to the outer radius of the workpiece, i.e. r=**150** mm from the central axis. Thus, as the outer one-half of the radius of the workpiece **106** is supported above the non-planar substantial portion **108**, three-quarters of the surface area of the workpiece **106** is supported above the non-planar substantial portion **108**.

Alternatively, the non-planar substantial portion **108** may include more or less of the upper surface **104**, and may include different non-planar shapes or configurations.

Advantageously, in this embodiment the upper surface **104** of the support plate **102** has a shape complementary to the expected thermally deformed shape **112** of the workpiece **106**. More particularly, in this embodiment at least some of the upper surface **104** of the support plate is generally FRISBEE™ or saucer-shaped. More particularly still, in this embodiment a portion of the upper surface **104** extending from a central axis (r=**0**) of the workpiece to beneath an outer perimeter of the workpiece (r=**150** mm) is generally saucer-shaped. In this regard, when the upper surface **18** of the workpiece **106** is heated to the desired temperature in less than a thermal conduction time of the workpiece, while the bulk of the workpiece remains at the cooler intermediate temperature, the increased thermal expansion of the upper surface **18** of the workpiece relative to the bulk of the workpiece causes it to deform to the expected thermally deformed shape **112** shown in Figure **4**. In this embodiment, due to the shape of the upper surface **104**, the outer perimeter of the workpiece **106** does not strike the upper surface **104** when it initially thermally deforms to the expected thermally deformed shape **112**. The absence of such contact may improve the likelihood of survival of the workpiece **106** if the workpiece is scratched or otherwise damaged, as such

scratches tend to increase the likelihood of Type I breakage. Conversely, however, in the absence of such scratches or other damage, a controlled impact between the workpiece **106** and the upper surface **104** as the workpiece initially thermally bows into the thermally deformed shape **112** may be desirable, as such contact may reduce overall workpiece motion, thereby reducing the likelihood of Type I or Type II breakage of the workpiece **106**.

In this embodiment, the workpiece **106** is supported above the support plate **102** by the support system. In this embodiment, the support system includes a plurality of support pins, three of which are shown at **120**, **122** and **124** in Figure **4**. In the present embodiment, the support system of the apparatus **100** further includes a fourth such support pin (not shown in the cross-section of Figure **4**), with the four pins being disposed symmetrically about and equidistantly from a center of the support plate **102** above which a center of the workpiece **106** is supported. In this embodiment, the support pins include quartz support pins. More particularly, in this embodiment each of the quartz pins has a fire-polished upper tip, to reduce the likelihood of scratching the workpiece **106** during thermally induced motion of the workpiece.

In this embodiment, each of the support pins is located at a radial distance of about two-thirds to about three-quarters of the radius of the workpiece. More particularly, in the present embodiment, in which the workpiece has a radius of **150** mm, each of the quartz support pins is located at a radial distance of r=**110** mm from a central axis of the workpiece. In this regard, for some specific thermal heat-treating cycles involving **150** mm radius semiconductor wafers, the least amount of thermally induced motion may occur at approximately this radial distance, r=**110**$\pm$**5** mm. Alternatively, however, other radial distances may be more suitable for other heat-treating cycles and/or for other types of workpieces.

Also in this embodiment, each of the quartz pins has a diameter of **1.5** mm, and is free-standing within a respective hole in the support plate **102**, to

reduce the extent to which the pins may contribute to thermal coupling between the support plate and the workpiece. Alternatively, if desired, the pins may be free-standing within an annular channel defined in the support plate (not shown in this embodiment; discussed below in connection with a further embodiment). If desired, the quartz pins may be provided with a flange (not shown in this embodiment) at a bottom region thereof, the flange having a diameter exceeding that of the hole (or of the annular channel, in alternative embodiments), to prevent the pins from jumping out of the hole or channel in response to reaction forces resulting from the thermally induced motion of the workpiece. Or as a further alternative, the pins may be rigidly attached to or formed integrally with the support plate **102**. More generally, any other suitable means for supporting the workpiece above an upper surface of a support plate such that at least a non-planar substantial portion of the upper surface is non-uniformly spaced from an initial shape of the workpiece, may be substituted for any of the support pins described herein.

Referring to Figure **6**, an apparatus according to a fourth embodiment of the invention is shown generally at **200**. As with the previous embodiment, the apparatus **200** includes a support plate **202** having a non-planar upper surface **204**, and a support system configured to support the workpiece **106** above the support plate **202** during heat-treating of the workpiece, such that the lower surface **20** of the initial shape **110** of the workpiece is supported at a non-uniform spacing above the non-planar upper surface **204** of the support plate, the non-uniform spacing including an edge gap beneath an outer perimeter of the workpiece, and a central gap at a central axis of the workpiece.

In this embodiment, at least a substantial portion **208** of the upper surface **204** is non-planar and is configured to be non-uniformly spaced from the initial shape **110** of the workpiece **106**. However, in this embodiment the shape of the upper surface **204**, and in particular the shape of the substantial portion **208**, differs from the previous embodiment.

More particularly, in this embodiment the upper surface **204** is beveled. Thus, in this embodiment, at least some of the upper surface **204** of the support plate **202** is generally frustoconical-shaped.

In the present embodiment, the upper surface **204** includes a disc-shaped planar central region **207**, configured to be spaced a uniform vertical distance from the planar initial shape **110** of the workpiece **106**. At a threshold radial distance from a central axis of the workpiece **106**, the upper surface **204** transitions from the disc-shaped planar central region **207** to the substantial portion **208**, which slopes downwardly at a constant slope angle as it extends radially outwardly from the central axis of the workpiece. Thus, the central region **207** and the surrounding substantial portion **208** form a generally frustoconical shape.

In this embodiment, the threshold radial distance at which the planar central region **207** transitions to the downwardly sloping non-planar substantial portion **208** is r=**75** mm, and the vertical spacing between the upper surface **204** and the workpiece **106** varies from a central gap of **1** mm at the central region **207** to an edge gap of **3** mm at the outer perimeter (r=**150** mm) of the substantial portion **208**. Alternatively, however, different vertical spacings, and different threshold radial distances for transitioning between the planar and non-planar portions, may be substituted.

Referring to Figure **7**, an apparatus according to a fifth embodiment of the invention is shown generally at **300**. The apparatus **300** includes a support plate **302** having a non-planar upper surface **304**, and a support system configured to support the workpiece **106** above the support plate **302** during heat-treating of the workpiece, such that the lower surface **20** of the initial shape **110** of the workpiece is supported at a non-uniform spacing above the non-planar upper surface **304** of the support plate, the non-uniform spacing

including an edge gap beneath an outer perimeter of the workpiece, and a central gap at a central axis of the workpiece.

In this embodiment, at least a substantial portion of the upper surface **304** is non-planar and is configured to be non-uniformly spaced from the initial shape **110** of the workpiece **106**.

In this embodiment, the non-planar substantial portion includes substantially all of the upper surface **304**. More particularly, in this embodiment at least some of the upper surface **304** of the support plate **302** is generally dome-shaped. More particularly still, in the present embodiment, a portion of the upper surface **304** above which the entire workpiece **106** is supported is dome-shaped.

Thus, in this embodiment the upper surface **304** of the support plate **302** extends outwardly and downwardly, from the central axis to the outer perimeter of the workpiece. More particularly, in this embodiment the upper surface **304** curves downwardly as it extends outwardly from its central region to its outer region.

In the present embodiment, the upper surface **304** of the support plate includes a generally upwardly extending side wall **310**, located radially outward from a perimeter region of the upper surface **304** above which an outermost perimeter of the initial shape **110** of the workpiece is to be supported. More particularly, in this embodiment the side wall **310** includes a circumscribing portion **312** extending from the perimeter region of the upper surface **304** to above a plane at which the initial shape **110** of the workpiece is to be supported. In this embodiment, the circumscribing portion **312** is configured to surround the outermost perimeter of the initial shape **110** of the workpiece in close proximity thereto when the workpiece **106** is supported above the support plate **302**. Alternatively, the circumscribing portion **312** may be omitted, and the side wall may extend generally upwardly to below the

plane at which the initial shape **110** of the workpiece **106** is to be supported. Alternatively, the side wall **310** may be omitted entirely. For example, the entire upper surface **304** may be dome-shaped, if desired.

In this embodiment, the spacing between the upper surface **304** and the initial shape **110** of the workpiece **106** at the central region above which the center of the workpiece is to be supported is about one-half millimeter.

Referring to Figures **5** and **8**, an apparatus according to a sixth embodiment of the invention is shown generally at **400** in Figure **8**. In this embodiment, the apparatus **400** includes a support plate **402** having a non-planar upper surface **404**, and a support system configured to support the workpiece **106** above the support plate **402**, such that the lower surface of **20** of the initial shape **110** of the workpiece **106** is supported at a non-uniform spacing above the non-planar upper surface **404** of the support plate **402**, the non-uniform spacing including an edge gap beneath an outer perimeter of the workpiece, and a central gap at a central axis of the workpiece.

As with the previously discussed embodiments, at least a substantial portion of the non-planar upper surface **404** is non-planar and is configured to be non-uniformly spaced from the initial shape **110** of the workpiece **106** when the workpiece is supported above the support plate **402**.

Advantageously, in the present embodiment the upper surface **404** of the support plate **402** also includes a contact portion **406** configured to be struck by an outer perimeter of the workpiece **106** during heat treatment of the workpiece.

In this regard, in the present embodiment a controlled impact between the outer perimeter of the workpiece and the upper surface of the support plate is deemed to be desirable, to dampen overall workpiece motion, thereby reducing the risk of both Type I and Type II breaks, provided that the risk that

such a controlled impact may break the workpiece does not outweigh the increased survivability chance that results from such dampening (this balancing may be different for scratched wafers, which suffer increased Type I breakage risks).

Alternatively, such a contact portion may also be provided in embodiments where an impact between the outer perimeter of the workpiece and the upper surface of the support plate is not necessarily desired, but may occur by chance as a variable of the process. For example, if the heat-treating of the workpiece **106** during a particular thermal cycle causes it to rapidly thermally deform more than expected, to an excessively thermally deformed shape **412** rather than the expected thermally deformed shape **112**, then the outer perimeter of the workpiece may nevertheless strike the upper surface of the support plate.

In either case (intentional or unintentional impact), if the outer perimeter of the workpiece **106** were to curl downward and strike the outer region of the upper surface **104** shown in Figure **5**, it would do so at a location of the substantial portion **108** which is curving downwardly as it extends radially outwardly. Thus, the outer perimeter would strike the upper surface **104** with a force having downward and radially inward components, resulting in the upper surface **104** applying an equal and opposite reaction force having upward and radially outward components to the workpiece **106**. The component of this reaction force in the radially outward direction places the workpiece **106** under tension. However, the present inventors have found that in embodiments in which the workpiece **106** is a semiconductor wafer, tension in the wafer is more likely to cause damage or breakage than compression.

Therefore, to reduce the likelihood that such a collision will damage or break the workpiece, in the present embodiment the contact portion **406** is configured to apply a reaction force having a radially inward component to the outer perimeter of the workpiece **106** in reaction to the outer perimeter of the

workpiece striking the contact portion **406**. Thus, if the outer perimeter of the workpiece **106** strikes the contact portion **406**, the radially inward component of the resulting reaction force applied by the contact portion **406** to the workpiece **106** places the workpiece **106** under compression rather than under tension, thereby reducing the likelihood that the workpiece will be damaged or broken by the collision. Additionally, such a collision will stop the downward motion of the workpiece, resulting in less momentum, which in turn tends to reduce thermally induced vibration of the workpiece.

More particularly, in this embodiment the contact portion **406** is angled relative to an adjacent inward portion **408** of the upper surface. More particularly still, in this embodiment the adjacent inward portion **408** of the upper surface is angled downwardly as it extends outwardly, and the contact portion **406** is substantially horizontal, extending generally horizontally and only slightly upwardly angled as it extends radially outward from the adjacent inward portion **408**. Alternatively, the contact portion **406** may be precisely horizontal, or may be otherwise angled. More generally, other angles, shapes and/or configurations of the contact portion **406** may be substituted while still ensuring that the reaction force applied by the contact portion **406** to the workpiece **106** has a radially inward component rather than a radially outward component, and may be selected based upon the angle at which the outer perimeter of the workpiece will strike the contact portion.

As discussed above in connection with Figures **1** and **2**, the placement of the contact portion **406** may also be selected to ensure that the outer perimeter of the workpiece is not traveling at its maximum possible thermally induced velocity at the time that it impacts upon the contact portion, to reduce the magnitude of the resulting shock waves. Similarly, the placement of the contact portion may be selected to control the timing at which such shock waves will propagate through the workpiece, to avoid the shock waves reaching the central region **33** of the workpiece when the workpiece is in its higher-stress thermally deformed shapes **32** or **36**.

Still referring to Figures **5** and **8**, in the present embodiment, the upper surface **404** of the support plate **402** is configured to be spaced from the expected thermally deformed shape **112** of the workpiece **106** by a distance sufficiently small that gas pressure between the upper surface **404** and the expected thermally deformed shape **112** of the workpiece opposes thermally induced motion of the workpiece.

More particularly, in this embodiment the upper surface **404** of the support plate **402** is configured to be substantially uniformly spaced from the expected thermally deformed shape **112** of the workpiece. In this regard, by providing such close and generally uniform spacing between the upper surface **404** and the expected thermally deformed shape **112**, the air gap between the upper surface **404** and the expected thermally deformed shape **112** provides significantly improved damping of thermally induced vibration of the workpiece **106**, in comparison to prior systems involving planar plates. To achieve such improved damping, in the present embodiment the upper surface **404** is shaped complementary to the expected thermally deformed shape **112**, having a generally dome-shaped central region, and curling downward more steeply in its outer region, in the vicinity of the adjacent inward portion **408**, to mimic the expected downward curling of the outer edges of the workpiece **106** as it assumes the expected thermally deformed shape **112**.

In this embodiment, the upper surface **404** of the support plate is configured to be spaced from the expected thermally deformed shape **112** of the workpiece **106** by a distance on the order of one millimeter. More particularly, in this embodiment the upper surface **404** is configured to be spaced from the expected thermally deformed shape **112** by a distance less than one millimeter. More particularly still, in this embodiment the upper surface **404** is configured to be spaced from the expected thermally deformed shape **112** by a distance of one-half millimeter.

Thus, in this embodiment the workpiece **106** is supported above the upper surface **404** such that the non-planar substantial portion of the upper surface **404** is substantially uniformly spaced from the expected thermally deformed shape **112** of the workpiece **106**, at a spacing of about one-half millimeter. Advantageously, such close and uniform spacing between such a large area of the expected thermally deformed shape **112** of the workpiece and the support plate provides significantly greater gas-pressure damping of vibratory motion of the workpiece, over a much greater surface area than prior systems employing planar support plates.

Referring to Figures **8** and **9**, an apparatus according to a seventh embodiment of the invention is shown generally at **500** in Figure **9**. In this embodiment, the apparatus **500** includes a support plate **502** having a non-planar upper surface **504**, and a support system The support plate **502** is generally similar to the support plate **402**, but in this embodiment also includes a gas flow barrier shown generally at **506**. The gas flow barrier **506** is configured to resist gas flow through a gap **508** between the upper surface **504** and the workpiece **106** when the workpiece is supported above the support plate **502**. In this regard, due to the rapidity with which the workpiece **106** deforms from its initial shape to its expected thermally deformed shape, the rapid deformation of the workpiece **106** may force air into the gap **508**. This rapid air flow may in turn tend to blow the workpiece **106** upward from its support pins. Alternatively, or in addition, the rapid air flow may potentially be supersonic, depending upon the thermal cycle in question. Either of these effects may be viewed as undesirably increasing the likelihood of damage to the workpiece. Advantageously, therefore, in the present embodiment the gas flow barrier **506** tends to slow the air flow resulting from the rapid thermal deformation of the workpiece **106**, thereby diminishing or preventing these undesirable effects.

In this embodiment, the gas flow barrier **506** includes a turbulence generator. More particularly, in this embodiment the turbulence generator includes an

annular channel **510** defined in the upper surface **504** of the support plate **502**. Thus, when rapid thermal deformation of the workpiece **106** forces air to flow rapidly into the gap **508**, some of the rapid air flow is deflected into the annular channel **510**, generating turbulence in the vicinity of the annular channel, thereby slowing the overall rate of air flow into the gap **508**.

In the present embodiment, the support system of the apparatus **500** includes a plurality of support pins, such as those shown at **512**, **514** and **516**, for example. Preferably at least three such support pins are employed for support stability, and in this embodiment, the apparatus **500** includes four such support pins. In this embodiment, the support pins are disposed in the annular channel **510** for supporting the workpiece **106** thereupon. More particularly, in this embodiment the four support pins are disposed at **90º** intervals within the annular channel **510**.

In this embodiment, the support pins are free-standing within the annular channel **510**, to reduce the extent to which the pins may contribute to thermal coupling between the support plate **502** and the workpiece **106**. Also in this embodiment, the support pin **512** includes a flange **520** at a bottom region thereof, and each of the other support pins includes a similar flange at a respective bottom region thereof. In this embodiment, the flange **520** has a rounded or curved bottom surface rather than a flat planar bottom surface, to further reduce thermal coupling. At least a portion **522** of the annular channel **510** is narrower than the flange **520** to prevent the flange from exiting the channel. An insertion hole (not shown) wider than the flange may be drilled at a single location in the annular channel **510** to allow insertion and removal of the support pins.

In the present embodiment, each of the support pins comprises a quartz pin having a diameter of **1.5** mm and a fire-polished upper tip to reduce the likelihood of scratching the workpiece **106**.

In this embodiment, the annular channel **510** is disposed at a radial distance of about two-thirds to about three-quarters of a radius of the workpiece **106**, from a center of the support plate **502** above which a center of the workpiece **106** is to be supported. More particularly, in the present embodiment the workpiece **106** is a **150** mm radius semiconductor wafer, and the annular channel **510** is disposed at a radial distance of approximately **110**$\pm$**5** mm from the central axis of the workpiece **106**. Alternatively, the annular channel **510** may be disposed at other radial distances. More generally, other types of gas flow barriers may be substituted for the annular channel **510**.

Referring to Figures **9** and **10**, an apparatus according to an eighth embodiment of the invention is shown generally at **600** in Figure **10**. The apparatus **600** includes a support plate **602**. In this embodiment the support plate **602** includes an annular channel **610** similar to the annular channel **510**, and the support plate **602** is similar in some other respects to the support plate **502**. However, in this embodiment the apparatus **600** further includes an additional gas flow barrier, namely, a ring **620** surrounding the support pins. Also in this embodiment, an upper surface **604** of the support plate is shaped slightly differently in the vicinity of the outer boundary of the annular channel in which the support pins are disposed, in order to assist in supporting the ring **620**.

In this embodiment, the ring **620** comprises an optical fiber ring. More particularly, in this embodiment the ring **620** comprises optical quartz fiber having a diameter of **1.5** mm. Alternatively, a bundle of smaller-diameter optical fibers may be substituted. Or as a further alternative, other suitable types of rings may be substituted. As yet a further illustrative alternative, the ring may be integrally formed with the support plate. More generally, other types of gas flow barriers may be substituted.

Referring to Figures **9** and **11**, an apparatus according to a ninth embodiment of the invention is shown generally at **700** in Figure **11**. The apparatus **700**

includes a support plate **702**, which includes an annular channel **710** similar to the annular channel **510**, and the support plate **702** is also similar in some other respects to the support plate **502**. However, in this embodiment the apparatus **700** further includes an additional gas flow barrier, namely, an elevated portion **712** of an upper surface **704** of the support plate **702**. The elevated portion **712** protrudes upwardly above adjacent portions of the upper surface **704**. More particularly, in this embodiment the elevated portion **712** protrudes upwardly at a location adjacent and radially inward from the annular channel **710**. In this embodiment, the elevated portion **712** includes a deflecting surface **714**, shaped to deflect incoming air downward into the annular channel **710**. In the present embodiment, the elevated portion **712** is located as close to the support pins within the annular channel **710** as possible, so that the support pins prevent the workpiece **106** from striking the elevated portion **712** during thermally induced motion of the workpiece. Also in this embodiment, the radial length of the elevated portion **712** is as small as possible while providing sufficient strength to prevent its breakage in response to rapid incoming air flow created by thermally induced motion of the workpiece, in order to minimize thermal coupling between the elevated portion **712** and the workpiece **106** during pre-heating of the workpiece. Alternatively, the elevated portion may be differently shaped and/or located.

Referring to Figures **11** and **12**, an apparatus according to a tenth embodiment of the invention is shown generally at **800** in Figure **12**. The apparatus **800** includes a support plate **802** which is generally similar to the support plate **702**. Thus, in this embodiment the support plate **802** includes, as an additional gas flow barrier, an elevated portion shown generally at **812**, protruding upwardly above adjacent portions of an upper surface **804** of the support plate **802**. In this embodiment, however, the elevated portion **812** comprises an inner elevated portion **814** and an outer elevated portion **816** on opposite sides of an annular channel **810** in which the support pins are disposed. The inner and outer elevated portions **814** and **816** are located as close as possible to the annular channel **810**, so that the support pins in the

channel prevent the workpiece **106** from striking the elevated portions **814** and **816** during thermally induced motion. The radial lengths of the elevated portions **814** and **816** are also minimized subject to strength constraints, to minimize thermal coupling between the elevated portions and the workpiece **106** during pre-heating of the workpiece.

Referring to Figures **5** and **13**, an apparatus according to an eleventh embodiment of the invention is shown generally at **900** in Figure **13**. In this embodiment, the apparatus **900** includes a support plate shown generally at **902**.

In the present embodiment, the support plate **902** includes a removable portion comprising at least some of the upper surface of the support plate. More particularly, in this embodiment the support plate **902** includes a lower portion **904** and an upper portion **906**, and the upper portion **906** is removable from the lower portion **904**. In this embodiment, the upper portion **906** is attachable to the lower portion **904**, to form the resulting support plate **902**, which is similar to the support plate **102** shown in Figure **5**.

The upper portion **906** may be attached to the lower portion **904** in any manner suitable for heat-treating and removability. For example, in this embodiment, the upper portion **906** has a flat planar lower surface, which is complementary to a flat planar upper surface of the lower portion **904**. Accordingly, when the upper portion **906** is placed on top of the lower portion **904**, gas pressure, gravity and friction between these two complementary surfaces tend to retain the upper and lower portions attached together. Alternatively, any suitable optical adhesive may be used to attach the upper and lower portions. More generally, other ways of attaching the upper and lower portions may be substituted.

In this embodiment, the upper portion **906** includes at least part of the upper surface of the support plate **902** formed by attaching the upper portion **906** to

the lower portion **904**. However, in this embodiment the upper portion **906** does not include the entire upper surface of the resulting support plate **902**. Rather, when the upper portion **906** is attached to the lower portion **904** to form the support plate **902**, the upper surface of the resulting support plate **902** includes the entire upper surface of the upper portion **906**, as well as an outer portion of the upper surface of the lower portion **904** at radial distances exceeding the radius of the upper portion **906**. Alternatively, however, the upper portion **906** may have a radius equal to or greater than that of the lower portion **904**, so that the upper surface of the upper portion **906** forms the entire upper surface of the support plate **902** formed by attaching the upper portion **906** to the lower portion **904**.

Referring to Figures **7** and **13**, in this embodiment the apparatus **900** further includes a second upper portion **908** having a differently shaped upper surface than that of the upper portion **906**. The second upper portion **908** is interchangeable with the upper portion **906** to change a shape of the upper surface of the support plate **902**. In this embodiment, the second upper portion **908** has an upper surface shaped similar to the upper surface **304** of the support plate **302** shown in Figure **7**.

Referring to Figures **9** and **13**, in this embodiment the apparatus **900** further includes a third upper portion **910** having a differently shaped upper surface than that of either the upper portion **906** or the second upper portion **908**. The third upper portion **910** is interchangeable with the upper portion **906** or the second upper portion **908** to change a shape of the upper surface of the support plate **902**. In this embodiment, the third upper portion **910** has an upper surface shaped similar to the upper surface **504** of the support plate **502** shown in Figure **9**.

Thus, in this embodiment the apparatus **900** includes a plurality of upper portions each having a uniquely shaped upper surface, and each of the plurality of upper portions is interchangeable with each other of the upper

portions to change a shape of the upper surface of the support plate **902**. If desired, the apparatus **900** may also include additional upper portions having additional uniquely shaped upper surfaces.

Advantageously, therefore, if a user of the apparatus wishes to apply a plurality of different thermal heat-treating cycles to a plurality of similar workpieces, resulting in different expected thermally deformed shapes of the workpieces, the user may simply remove one upper portion and attach a differently shaped upper portion to the lower portion **904**, thereby changing the resulting shape of the upper surface of the support plate **902**, to correspond to the expected thermally deformed shape of the workpiece for a particular thermal cycle. Similarly, such interchangeability may be equally advantageous in other situations where the expected thermally deformed shape of one workpiece during heat-treating will be different than that of another (for example, the application of similar heat-treating cycles to different types of workpieces, or different heat-treating cycles to different types of workpieces).

In this embodiment, the support plate **902** includes a lensing portion **920** configured to provide a desired lensing effect to electromagnetic radiation being transmitted through the support plate to the workpiece. More particularly, in this embodiment the lower portion **904** of the support plate **902** includes the lensing portion **920**.

In the present embodiment, the purpose of the lensing portion **920** is to compensate for a lensing effect of the non-uniform upper surface of the support plate **902** upon electromagnetic radiation being transmitted through the support plate **902** to pre-heat the workpiece.

In this embodiment, the lensing portion **920** includes an annular lens shape on a lower surface of the lower portion **904**. More particularly, in this embodiment the lensing portion is an annular quartz lens formed integrally

with the lower surface of the lower portion **904**. Although the lensing portion **920** is illustrated in Figure **13** as a protrusion beneath the remainder of the lower surface of the lower portion **904**, alternatively, the lensing portion may be formed in other ways. For example, the lensing portion may be formed as an indentation or recess in the lower surface of the lower portion **904**, or by otherwise modifying the shape of the lower surface of the lower portion **904**.

In this embodiment, the lensing portion **920** is shaped to compensate for an average lensing effect of the various attachable upper portions such as those shown at **906**, **908** and **910**. Alternatively, if desired, the lensing portion **920** may be removable, and different respective lensing portions (not shown) corresponding to each of the different attachable upper portions may be provided. Thus, a different respective lensing portion may be attached to the lower surface of the lower portion **904** for each respective upper portion **906**, **908** or **910**. Or, as a further alternative, a plurality of interchangeable lower portions with uniquely shaped respective lensing portions may be provided. As a further alternative still, each uniquely shaped upper portion may be provided with its own respective uniquely shaped lensing portion. For example, each unique lensing portion may be formed as an indentation in the lower surface of each respective upper portion, so that each upper portion includes its own integral lensing correction.

Or, as yet another alternative, referring to Figures **1-13**, any one of the support plates **12**, **42**, **102**, **202**, **302**, **402**, **502**, **602**, **702** or **802** may be provided with a respective lensing portion, either integral with or removable from its respective support plate.

More generally, other types, configurations and locations of suitable lensing portions may be substituted.

Referring to Figures **5** and **14**, an apparatus according to a twelfth embodiment of the invention is shown generally at **1000** in Figure **14**. In this

embodiment, the apparatus **1000** includes the support plate **102** shown in Figure **5**, for supporting the workpiece **106** thereabove. More particularly, in this embodiment the apparatus **1000** includes a workpiece plane plate **1002**, having a lower annular inwardly-protruding supporting edge **1004**, for supporting the support plate **102**. In the present embodiment the apparatus **1000** also includes means for supporting the workpiece **106** above the support plate **102** during heat-treating of the workpiece, such that the lower surface **20** of the initial shape **110** of the workpiece **106** is supported at a non-uniform spacing above the non-planar upper surface **104** of the support plate **102**, the non-uniform spacing including the edge gap **114** and the central gap **118** shown in Figure **5**. More particularly, in this embodiment the means for supporting the workpiece include a plurality of support pins, such as the support pins **120**, **122** and **124**. Alternatively, other suitable means for supporting the workpiece, such as the support system **15** shown in Figure **1** for example, may be substituted.

In this embodiment, the apparatus **1000** further includes a second plate **1006**, disposed above a plane at which the apparatus **1000** is configured to support the initial shape **110** of the workpiece **106**. In the present embodiment, the second plate **1006** is supported by an upper annular inwardly-protruding supporting edge **1008** of the workpiece plane plate **1002**.

In the present embodiment, a spacing **1020** between the upper surface **18** of the initial shape **110** of the workpiece **106** and a lower surface of the second plate **1006** is comparable to the spacing between the upper surface **104** of the support plate **102** and the lower surface **20** of the initial shape **110** of the workpiece **106**. More particularly, in this embodiment the spacing **1020** is on the order of one millimeter. Alternatively, however, the spacing **1020** may be greater than or less than the spacing between the upper surface **104** and the workpiece **106**; however, in embodiments such as the present embodiment in which the workpiece **106** is a semiconductor wafer whose upper surface **18** is a device side, the spacing **1020** is preferably sufficiently large to avoid

physical contact between the upper surface (device side) **18** of the workpiece and the second plate **1006** when the workpiece thermally deforms to its expected thermally deformed shape **112**. For example, for the purpose of the thermal cycles discussed for illustrative purposes in connection with the present embodiment, the spacing **1020** is preferably at least **0.5** mm, although more generally, the preferred spacing may vary based on the parameters of the particular thermal cycle in question.

In addition to providing an enhanced damping force, the presence of both the support plate **102** and the second plate **1006** in close proximity to the wafer tends to reduce gas throughput in the vicinity of the workpiece, which tends to reduce convection and contamination problems.

Alternatively, the second plate **1006** may be omitted if desired.

In this embodiment, the apparatus **1000** further includes a heat-treating system shown generally at **1052**, for heat-treating the workpiece **106**. More particularly, in this embodiment the heat-treating system is configured to thermally induce motion of the workpiece **106**. In this regard, in the present embodiment, the heat-treating system **1052** is configured to pre-heat the workpiece **106** to an intermediate temperature, and is configured to then heat only a surface region of the workpiece **106** to a desired temperature greater than the intermediate temperature in less than a thermal conduction time of the workpiece. More particularly, in this embodiment the heat-treating system **1052** includes a pre-heating system configured to pre-heat the workpiece to the intermediate temperature, and a surface heating system configured to heat only the surface region of the workpiece to the desired temperature. In this embodiment, each of the pre-heating system and the surface heating system includes a respective irradiance system. More particularly, in this embodiment the pre-heating system includes a DC arc lamp **1058**, and the surface heating system includes at least one irradiance flash device configured to expose the workpiece **106** to an irradiance flash. More

particularly still, in this embodiment the irradiance flash device includes a flash lamp **1060**, configured to produce an irradiance flash consisting primarily of visible and infrared wavelengths. Alternatively, the irradiance flash device may include a microwave pulse generator configured to produce an irradiance flash consisting primarily of microwave wavelengths. In this embodiment, the DC arc lamp **1058** is configured to irradiate the lower surface **20** of the workpiece **106** through a quartz window **1066** and through the quartz support plate **102**, and similarly, the flash lamp **1060** is configured to irradiate the upper surface **18** of the workpiece **106** through a quartz window **1068** and through the second plate **1006**. Generally, in the present embodiment, the various components of the heat-treating system of the apparatus **1000** other than the support plate **102** are similar to corresponding components of heat-treating systems disclosed in the aforementioned commonly owned United States Patent Application Publication No. US **2005/0133167**. Alternatively, however, other suitable heat-treating systems and/or components thereof may be substituted.

Still referring to Figures **5** and **14**, in operation of the embodiment shown in Figure **14**, the workpiece **106** is supported above the upper surface **104** of the support plate **102** such that at least the non-planar substantial portion **108** of the upper surface **104** of the support plate is non-uniformly spaced from the initial shape **110** of the workpiece **106**. In this embodiment, the workpiece **106** is supported in this manner while heat-treating the workpiece. More particularly, in this embodiment the heat-treating includes both a pre-heating stage and a surface heating stage which includes thermally inducing motion of the workpiece.

During the pre-heating stage, the DC arc lamp **1058** is activated to pre-heat the workpiece **106** to a desired intermediate temperature, by irradiating the workpiece through the quartz window **1066** and the support plate **102**. During this pre-heating stage, as discussed above in connection with Figure **5**, the initial shape **110** of the workpiece is supported above the upper surface **104**

of the support plate **102** at a non-uniform spacing therebetween that minimizes spatial variations in heat loss rates across the workpiece **106** when an expected non-uniform temperature distribution exists in the support plate **102**. Advantageously therefore, in this embodiment the "first wafer" effect discussed earlier herein is thereby minimized.

When the workpiece arrives at the intermediate temperature, the surface heating stage of the heat-treating cycle then includes thermally inducing motion of the workpiece. More particularly, thermally inducing motion of the workpiece includes heating only a surface region of the workpiece to a desired temperature in less than a thermal conduction time of the workpiece, thereby deforming the workpiece from the initial shape to a thermally deformed shape. To achieve this, in this embodiment the flash lamp **1060** is activated, to expose the upper surface **18** of the workpiece **106** (which in this embodiment is the device side of a semiconductor wafer) to a high intensity electromagnetic radiation flash, through the quartz window **1068** and the second plate **1006**. The high intensity irradiance flash has a duration significantly less than a thermal conduction time of the workpiece, such as a **1** ms flash, for example. The irradiance flash heats only the upper surface **18** of the workpiece to the desired temperature, while the bulk of the workpiece remains at the relatively cooler intermediate temperature. Due to the rapid thermal expansion of the heated upper surface **18** of the workpiece, the upper surface **18** thermally expands more than the bulk of the workpiece, thereby causing the workpiece to thermally deform from its initial shape **110** to its expected thermally deformed shape **112**. The rapidity at which this thermal deformation occurs also causes the workpiece to overshoot its equilibrium deformed shape, and to oscillate or vibrate.

In this embodiment, supporting the workpiece **106** includes controlling contact between the workpiece **106** and the upper surface **104** of the support plate **102** when the workpiece **106** thermally deforms from the initial shape **110** to its expected thermally deformed shape **112**. Manners of such control have

been discussed earlier herein, and include, for example, positioning the upper surface **104** to reduce or limit the velocity of the outer perimeter of the workpiece at the time that it impacts the upper surface **104**, and to control the timing of shock waves induced by the impact relative to the high-stress thermally deformed shapes **32** and **36** shown in Figure **2**. In alternative embodiments, controlling may include avoiding contact entirely, although at least some contact between the outer perimeter and the support plate may be desirable for many embodiments, to reduce overall workpiece motion, thereby improving survivability. Thus, such control advantageously reduces the risk of damage to or breakage of the workpiece resulting from a collision between the workpiece and the support plate.

Also in this embodiment, supporting the workpiece **106** includes supporting the thermally deformed shape of the workpiece **106** above the upper surface **104** of the support plate **102** by a distance sufficiently small that gas pressure between the upper surface **104** and the thermally deformed shape of the workpiece **106** opposes thermally induced motion of the workpiece. Thus, the gas pressure between the support plate **102** and the workpiece **106** serves to dampen vibratory motion of the workpiece, thereby further reducing the likelihood of damage to or breakage of the workpiece.

Referring to Figures **1-14**, in various illustrative embodiments, each of the apparatuses **10**, **40**, **100**, **200**, **300**, **400**, **500**, **600**, **700**, **800** and **900** may include its own heat-treating system, which may be either similar to or substantially different from the illustrative heat-treating system **1052** shown in Figure **14**. Conversely, in alternative embodiments, each of these apparatuses may include only support plate components for installation in existing heat-treating systems.

Referring to Figures **5** and **15**, an apparatus for supporting a workpiece during heat-treating according to a thirteenth embodiment of the invention is shown generally at **1500**. The apparatus **1500** includes a support plate **1502** having

a non-planar upper surface shown generally at **1504**, and a support system (not shown in Figure **15**). Generally, the support plate **1502** is similar to that shown at **102** in Figure **5**. Unlike the support plate **102**, however, in this embodiment an inner region **1510** of the upper surface **1504** of the support plate **1502** is generally concave, and an outer region **1512** of the upper surface **1504** of the support plate **1502** is generally convex.

More particularly, in this embodiment the upper surface **1504** of the support plate **1502** has a recessed concave portion centered about the central axis of the workpiece, defining the inner region **1510**. In this embodiment, the recessed concave inner region **1510** extends outward from the central axis of the workpiece to about two-thirds of the radius of the workpiece (to about r = **100** mm), at which radial distance the upper surface **1504** transitions from the generally concave inner region **1510** to the generally convex outer region **1512**.

Other Alternatives

Although specific upper surface shapes of support plates have been described herein for illustrative purposes, numerous other possible shapes will be apparent to one of ordinary skill in the art upon reviewing the present specification. Thus, any alternative upper surface shape, at least a substantial portion of which is non-planar, may be substituted for any of the upper surface shapes described herein, as appropriate for a particular embodiment or application.

Similarly, although various features such as gas flow barriers, contact portions and support pins have been shown in conjunction with specific illustrative upper surface shapes of support plates, alternatively, such features may be omitted from other embodiments employing these upper surface shapes.

Although various features described herein have been described in separate embodiments, many of these features are not mutually exclusive and may be combined with or substituted for each other in various alternative embodiments.

For example, referring back to Figure **8**, the contact portion **406** may be provided in any of the other embodiments described herein, or in other embodiments not shown.

Similarly, referring to Figures **5** and **9**, support pins such as those shown in Figure **1** may be substituted for those shown in Figures **9-13** or vice versa. More generally, support pins such as those shown in Figure **5** or the alternative pins shown in Figure **9** may be substituted for the specific support pins shown in any other embodiment herein. Alternatively, other types of support pins not specifically described herein may be substituted. More generally, different means for supporting the workpiece may be substituted. For example, flexible support members, such as the quartz fiber loops of the support system **15** shown in Figures **1** and **4** or any of the other flexible support members disclosed in commonly owned U.S. patent application no. US **2004/0178553**, for example, may be substituted for the support pins of any of the other embodiments. Likewise, the locations at which the support pins or other support means are disposed may be altered as appropriate for a particular embodiment.

Likewise, referring to Figures **9-13**, gas flow barriers such as the turbulence generators shown in Figures **9-13** may be provided in any of the embodiments shown herein.

Referring to Figure **13**, upper portions having any of the upper surfaces herein may be added, substituted or removed from any given combination of one or more lower portions and one or more upper portions. More generally, any

other suitable alternative upper portion having an upper surface at least a substantial portion of which is non-planar may be added or substituted.

More generally still, while specific embodiments of the invention have been described and illustrated, such embodiments should be considered illustrative of the invention only and not as limiting the invention as construed in accordance with any claims that may accompany this application or an application claiming priority from it.

What is claimed is:

1. An apparatus for supporting a workpiece during heat-treating thereof, the apparatus comprising:

a support plate having a non-planar upper surface; and

a support system configured to support the workpiece above the support plate during heat-treating of the workpiece, such that a lower surface of an initial shape of the workpiece is supported at a non-uniform spacing above the non-planar upper surface of the support plate, said non-uniform spacing including an edge gap beneath an outer perimeter of the workpiece, and a central gap at a central axis of the workpiece.

2. The apparatus of claim **1**, wherein the edge gap is in the range of about $3x10^{-4}$ m to about $1.2\ x10^{-3}$ m.

3. The apparatus of claim **2** wherein the edge gap is about one-half millimeter.

4. The apparatus of any one of claim **1** to claim **3** wherein the central gap is in the range of about $1.2\ x10^{-3}$ m to about $2.5\ x10^{-3}$ m.

5. The apparatus of any one of claim **1** to claim **4** wherein the support system comprises a plurality of flexible support members.

6. The apparatus of claim **5** wherein the plurality of flexible support members comprises a plurality of quartz fibers.

7. The apparatus of any one of claim **1** to claim **4** wherein the support system comprises a plurality of support pins.

8. The apparatus of any one of claim **1** to claim **7** wherein the edge gap and the central gap are unequal.

9. The apparatus of any one of claim **1** to claim **7** wherein the edge gap is larger than the central gap.

10. The apparatus of claim **9** wherein the edge gap is at least twice as large as the central gap.

11. The apparatus of any one of claim **1** to claim **10** wherein the non-uniform spacing minimizes spatial variations in heat loss rates across the workpiece when an expected non-uniform temperature distribution exists in the support plate.

12. The apparatus of any one of claim **1** to claim **11** wherein the non-uniform spacing generally varies as a non-decreasing function of the radial distance.

13. The apparatus of any one of claim **1** to claim **12** wherein the non-uniform spacing is substantially constant at less than a threshold radial distance from the central axis of the workpiece and wherein the non-uniform spacing generally increases as a function of radial distance from the threshold radial distance to a radius of the workpiece.

14. The apparatus of any one of claim **1** to claim **13** wherein the central gap is less than or equal to about one millimeter and the edge gap is more than about two millimeters.

15. The apparatus of any one of claim **1** to claim **14** wherein the non-planar upper surface of the support plate has a shape complementary to an expected thermally deformed shape of the workpiece.

16. The apparatus of claim **15** wherein at least some of the upper surface of the support plate is generally dome-shaped.

17. The apparatus of claim **15** wherein at least some of the upper surface of the support plate is generally saucer-shaped.

18. The apparatus of claim **15** wherein at least some of the upper surface of the support plate is generally frustoconical-shaped.

19. The apparatus of claim **15** wherein an inner region of the upper surface of the support plate is generally concave, and wherein an outer region of the upper surface of the support plate is generally convex.

20. The apparatus of any one of claim **1** to claim **18** wherein the upper surface of the support plate extends outwardly and downwardly, from the central axis to the outer perimeter of the workpiece.

21. The apparatus of any one of claim **1** to claim **20** wherein the upper surface of the support plate comprises a contact portion configured to be struck by an outer perimeter of the workpiece during heat-treating thereof.

22. The apparatus of claim **21** wherein the contact portion is configured to apply a reaction force having a radially inward component to the outer perimeter of the workpiece in reaction to the outer perimeter of the workpiece striking the contact portion.

23. The apparatus of claim **21** wherein the contact portion is angled relative to an adjacent inward portion of the upper surface.

24. The apparatus of any one of claim **1** to claim **23** wherein the upper surface of the support plate is configured to be spaced from an expected thermally deformed shape of the workpiece by a distance sufficiently small that gas pressure between the upper surface and the expected thermally deformed shape of the workpiece opposes thermally induced motion of the workpiece.

25. The apparatus of claim **24** wherein the upper surface of the support plate is configured to be spaced from the expected thermally deformed shape of the workpiece by a distance on the order of one millimeter.

26. The apparatus of any one of claim **1** to claim **25** wherein the support plate comprises a gas flow barrier configured to resist gas flow through a gap between the upper surface and the workpiece when the workpiece is supported above the support plate.

27. The apparatus of claim **26** wherein the gas flow barrier comprises a turbulence generator.

28. The apparatus of claim **27** wherein the turbulence generator comprises an annular channel defined in the upper surface of the support plate.

29. The apparatus of any one of claim **1** to claim **28** wherein the support plate comprises a removable portion comprising at least some of the upper surface of the support plate.

30. The apparatus of claim **29** wherein the support plate comprises a lower portion and an upper portion, and wherein the removable portion comprises the upper portion.

31. The apparatus of claim **30** further comprising a second upper portion having a differently shaped upper surface, and wherein the second upper portion is interchangeable with the upper portion to change a shape of the upper surface of the support plate.

32. The apparatus of claim **30** further comprising a plurality of upper portions each having a uniquely shaped upper surface, and wherein each of the plurality of upper portions is interchangeable with the upper portion to change a shape of the upper surface of the support plate.

33. The apparatus of claim **29** wherein the removable portion comprises a removable edge portion and a removable central portion.

34. The apparatus of any one of claim **1** to claim **33** wherein the edge gap and the central gap are adjustable.

35. The apparatus of any one of claim **1** to claim **34** wherein the support plate comprises a lensing portion configured to provide a desired lensing effect to electromagnetic radiation being transmitted through the support plate to the workpiece.

36. The apparatus of any one of claim **1** to claim **36** further comprising a second plate disposed above a plane at which the apparatus is configured to support the initial shape of the workpiece.

37. The apparatus of claim **1** further comprising a heat-treating system configured to thermally induce motion of the workpiece.

38. The apparatus of claim **37** wherein the heat-treating system is configured to pre-heat the workpiece to an intermediate temperature, and is configured to heat only a surface region of the workpiece to a desired temperature greater than the intermediate temperature in less than a thermal conduction time of the workpiece.

39. An apparatus for supporting a workpiece during heat-treating thereof, the apparatus comprising:

a support plate having a non-planar upper surface; and

means for supporting the workpiece above the support plate during heat-treating of the workpiece, such that a lower surface of an initial shape of the workpiece is supported at a non-uniform spacing above the non-planar upper surface of the support plate, said non-uniform spacing including an edge gap beneath an outer perimeter of the workpiece, and a central gap at a central axis of the workpiece.

40. A method comprising:

supporting a workpiece above a non-planar upper surface of a support plate during heat-treating of the workpiece, such that a lower surface of an initial shape of the workpiece is supported at a non-uniform spacing above the non-planar upper surface of the support plate, said non-uniform spacing including an edge gap beneath an outer perimeter of the workpiece, and a central gap at a central axis of the workpiece.

41. The method of claim **40**, wherein the edge gap is in the range of about $3x10^{-4}$ m to about $1.2\ x10^{-3}$ m.

42. The method of claim **40** or claim **41** wherein the central gap is in the range of about $1.2\ x10^{-3}$ m to about $2.5\ x10^{-3}$ m.

43. The method of any one of claim **40** to claim **42** wherein supporting comprises supporting the workpiece with a plurality of quartz fibers.

44. The method of any one of claim **40** to claim **43** wherein supporting comprises supporting the workpiece while heat-treating the workpiece, and wherein heat-treating the workpiece comprises thermally inducing motion of the workpiece.

45. The method of claim **44** wherein thermally inducing motion of the workpiece comprises heating only a surface region of the workpiece to a desired temperature in less than a thermal conduction time of the workpiece, thereby deforming the workpiece from the initial shape to a thermally deformed shape.

46. The method of any one of claim **40** to claim **45** wherein the non-uniform spacing minimizes spatial variations in heat loss rates across the workpiece when an expected non-uniform temperature distribution exists in the support plate.

47. The method of any one of claim **40** to claim **46** wherein supporting comprises supporting the thermally deformed shape of the workpiece above the upper surface of the support plate by a distance sufficiently

small that gas pressure between the upper surface and the thermally deformed shape of the workpiece opposes thermally induced motion of the workpiece.

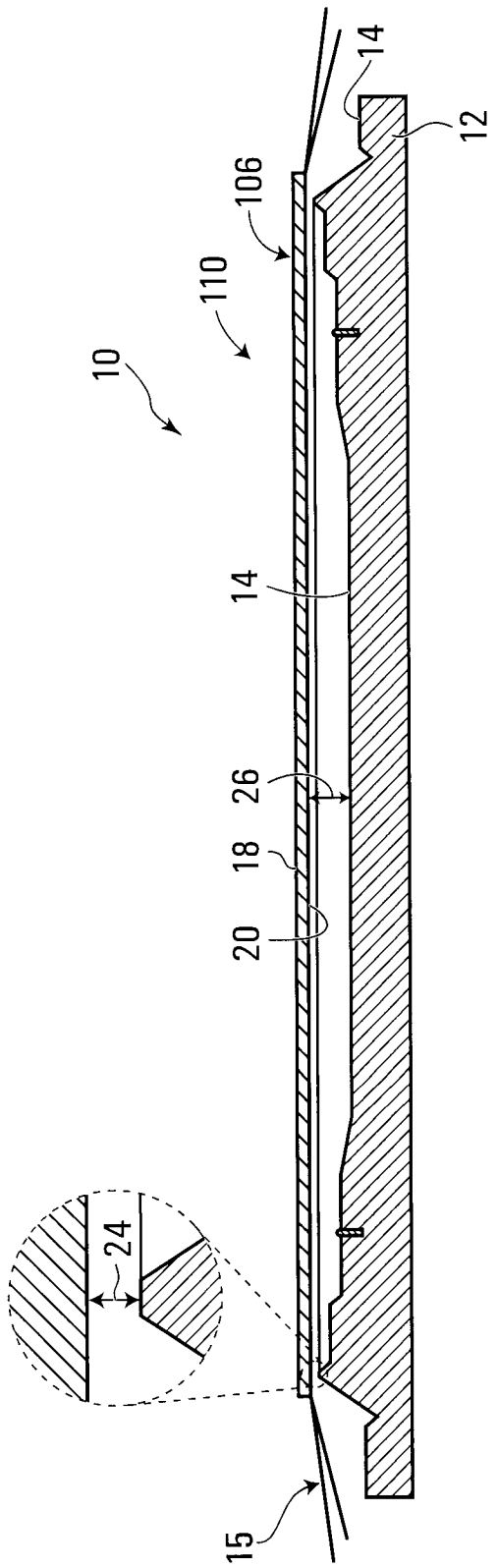

FIG. 1

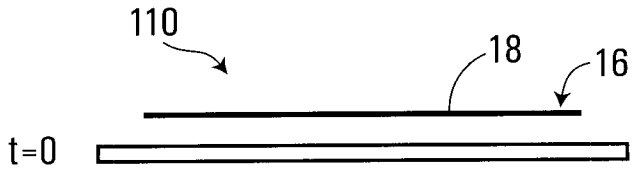

FIG. 2A

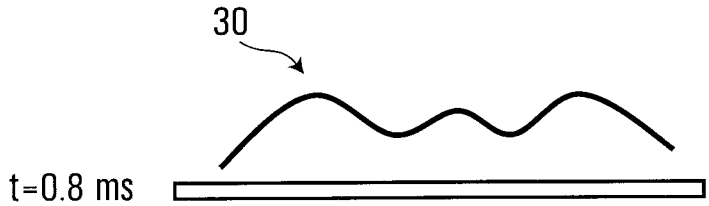

FIG. 2B

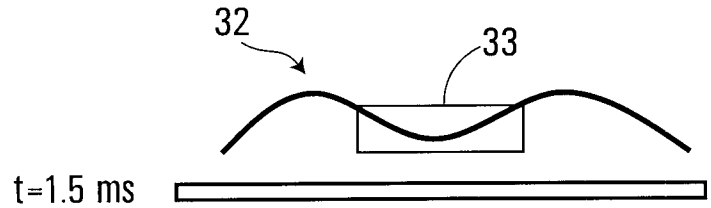

FIG. 2C

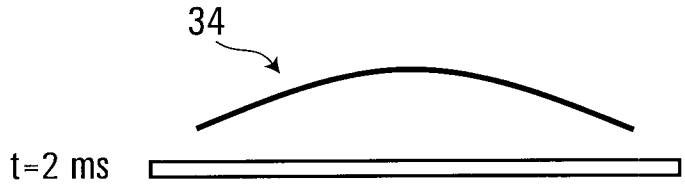

FIG. 2D

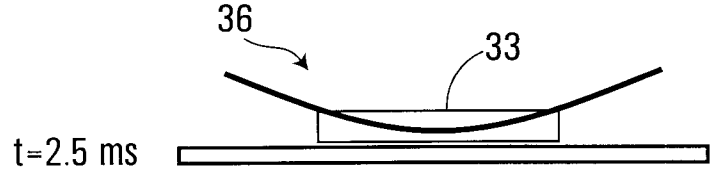

FIG. 2E

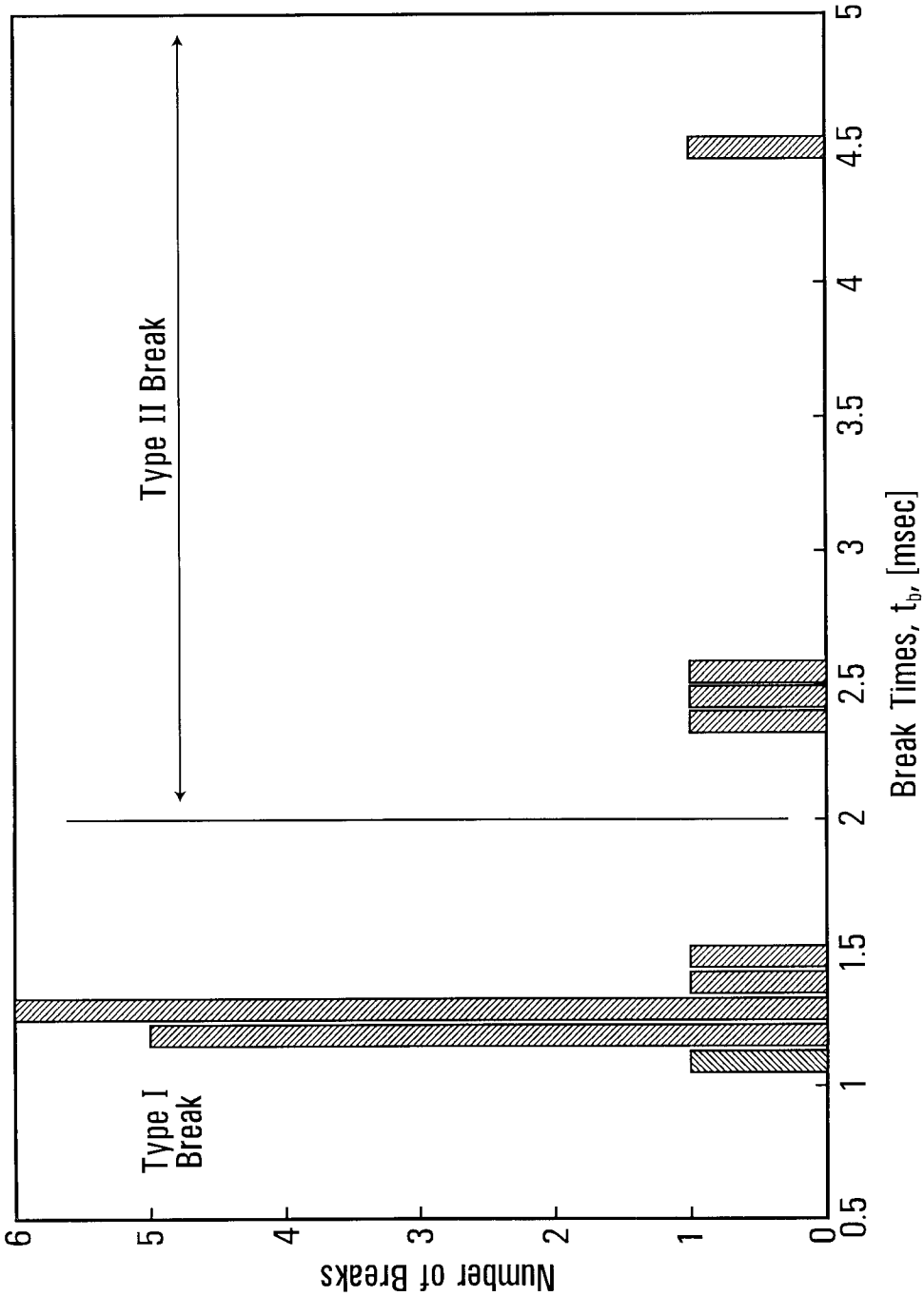
Number of Breaks
Break Times, t_b, [msec]
Type I Break
Type II Break
0
1
2
3
4
5
6
0.5
1
1.5
2
2.5
3
3.5
4
4.5
5

FIG. 3

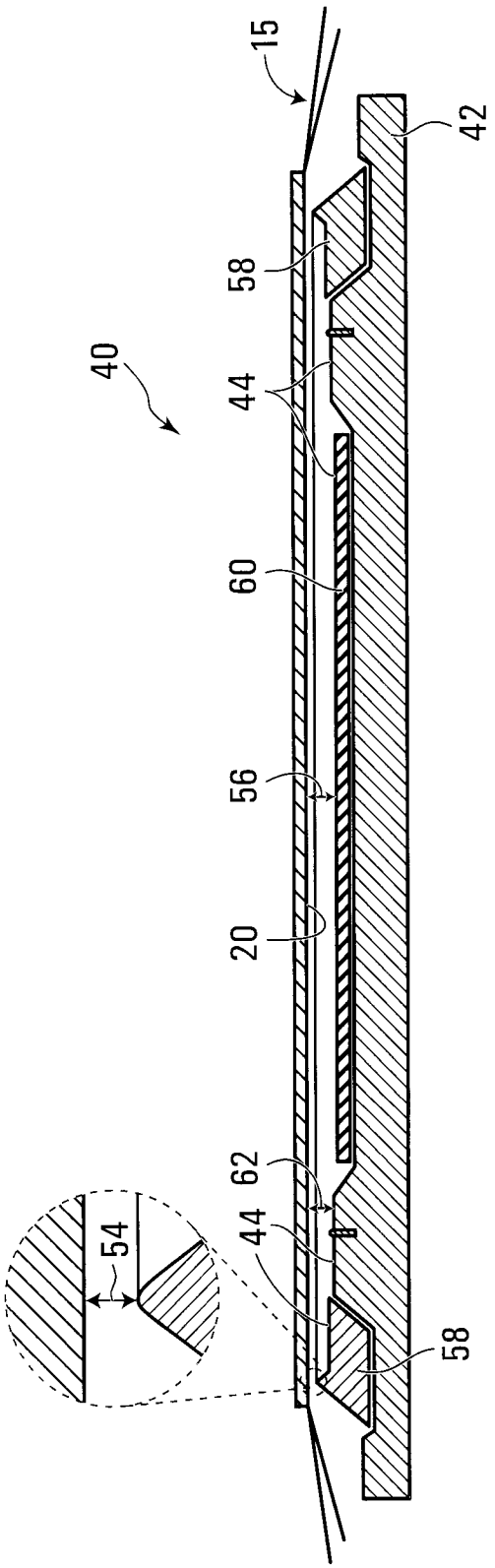

FIG. 4

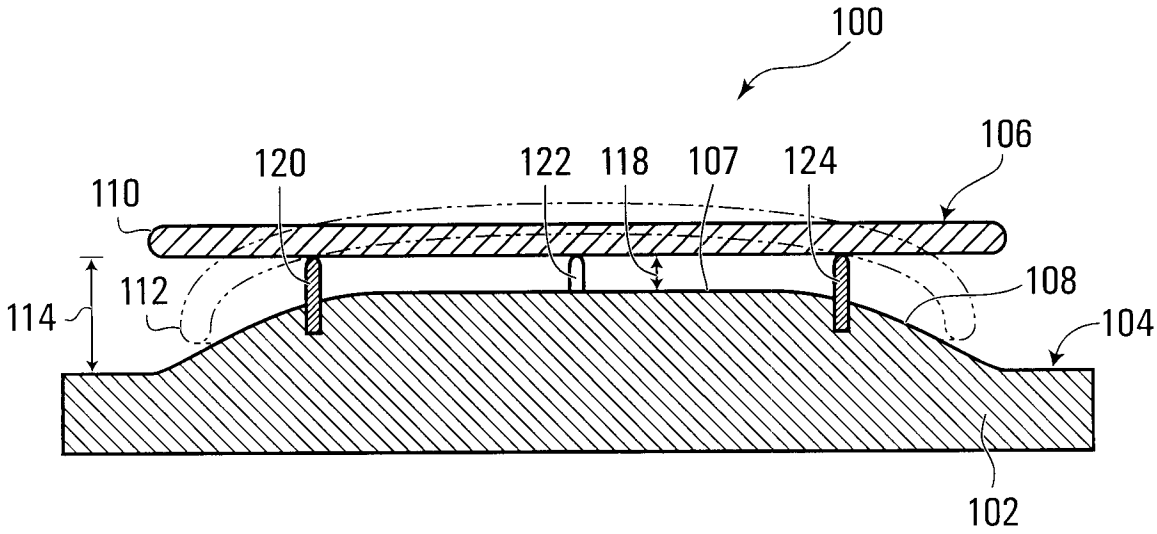
100
106
120
122
118
107
124
110
112
114
108
104
102

FIG. 5

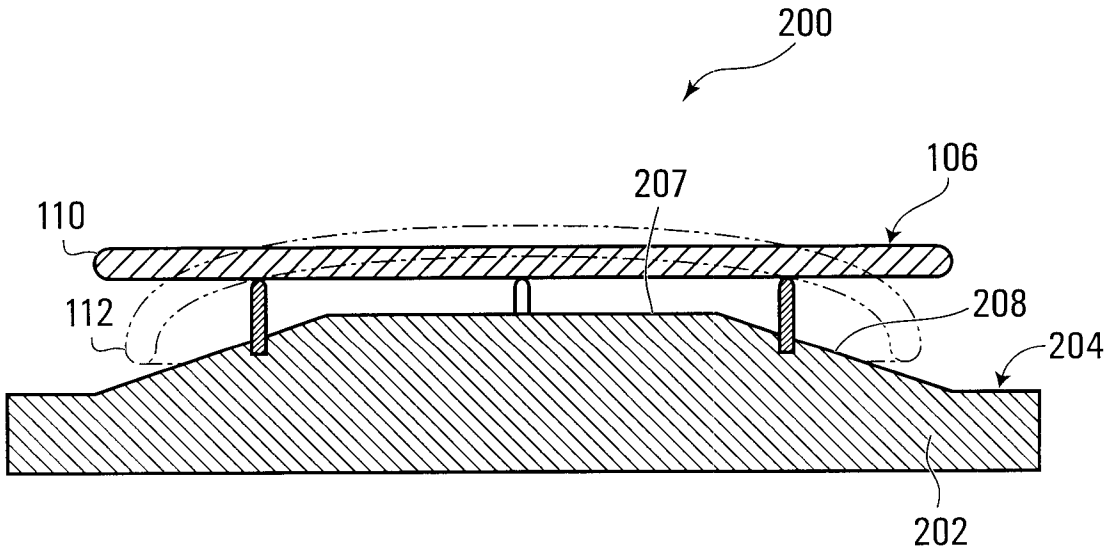
200
106
207
110
112
208
204
202

FIG. 6

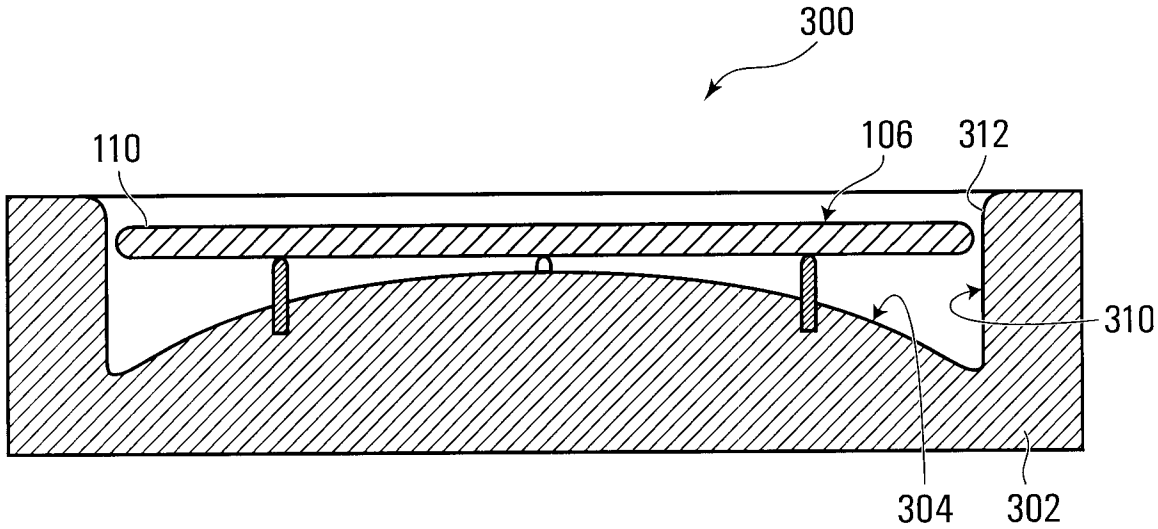

FIG. 7

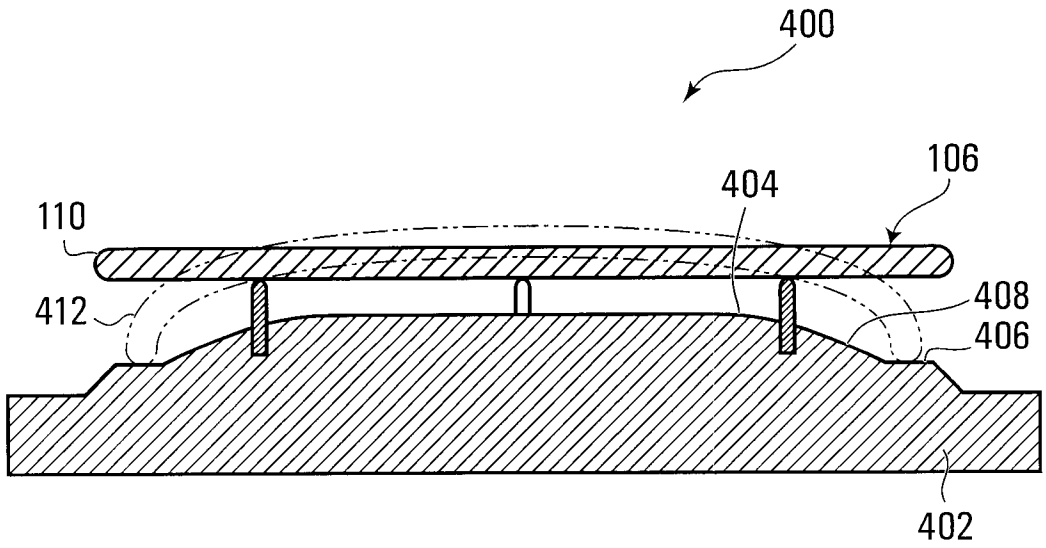

FIG. 8

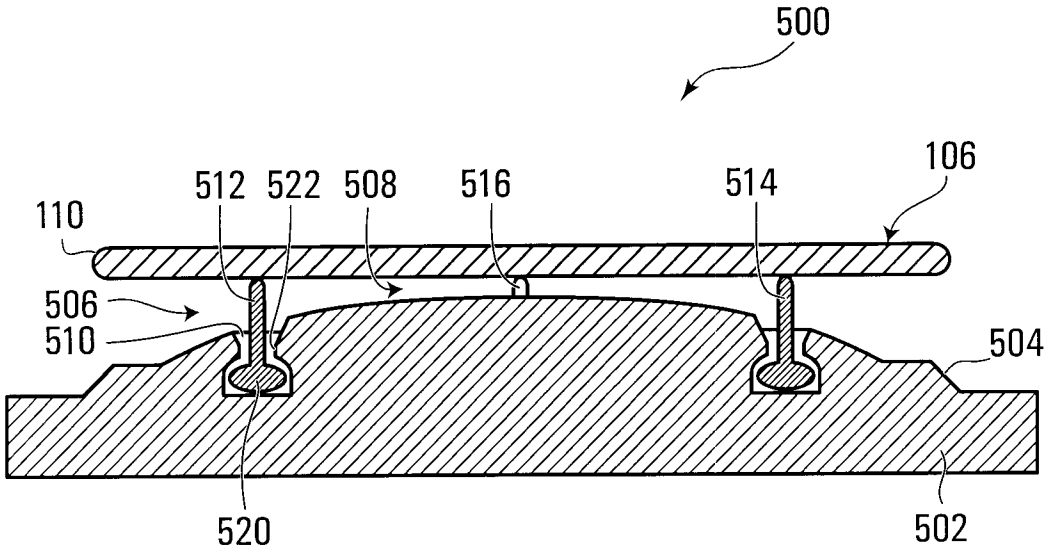
500
106
512
522
508
516
514
110
506
510
504
520
502

FIG. 9

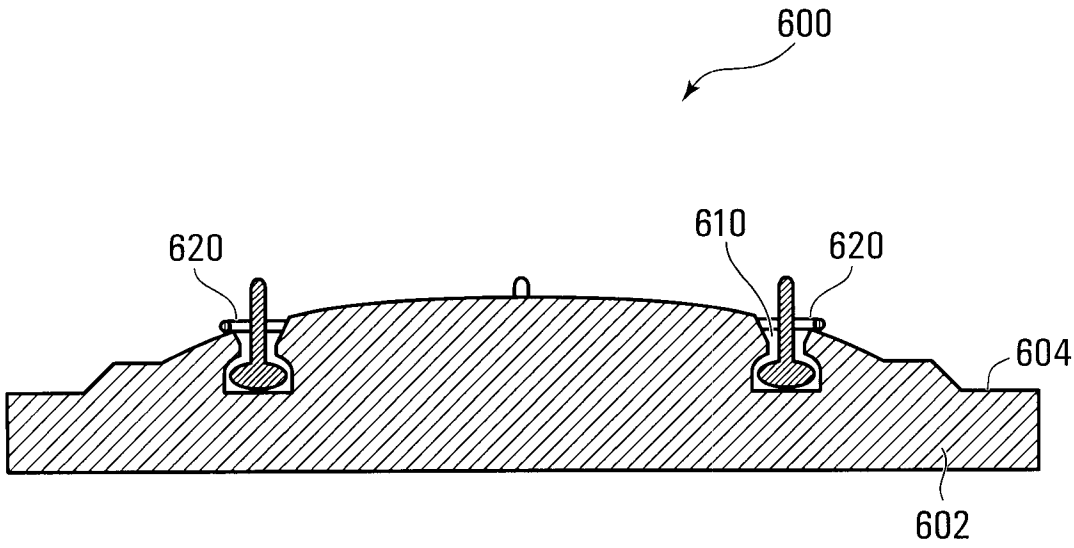
600
610
620
620
604
602

FIG. 10

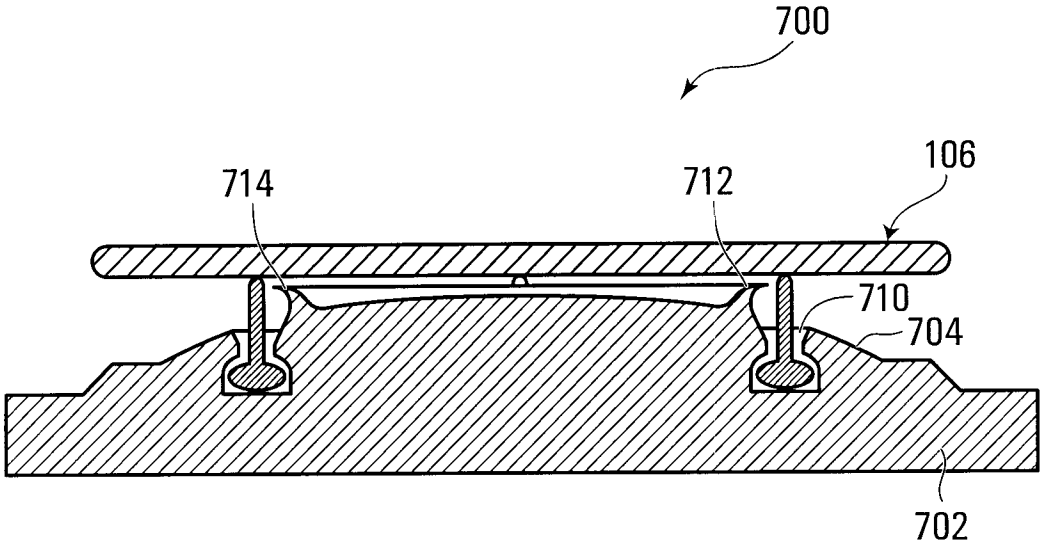

FIG. 11

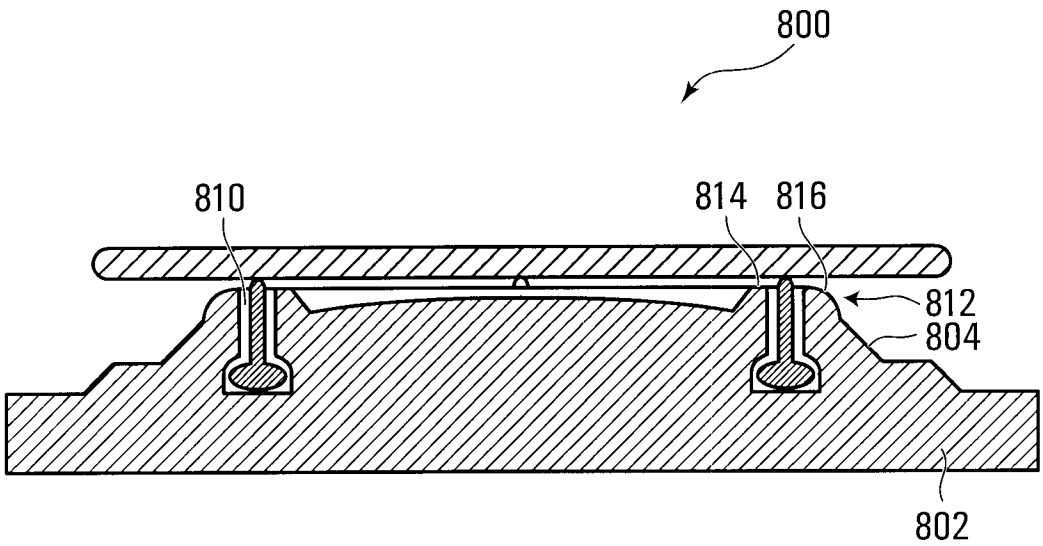

FIG. 12

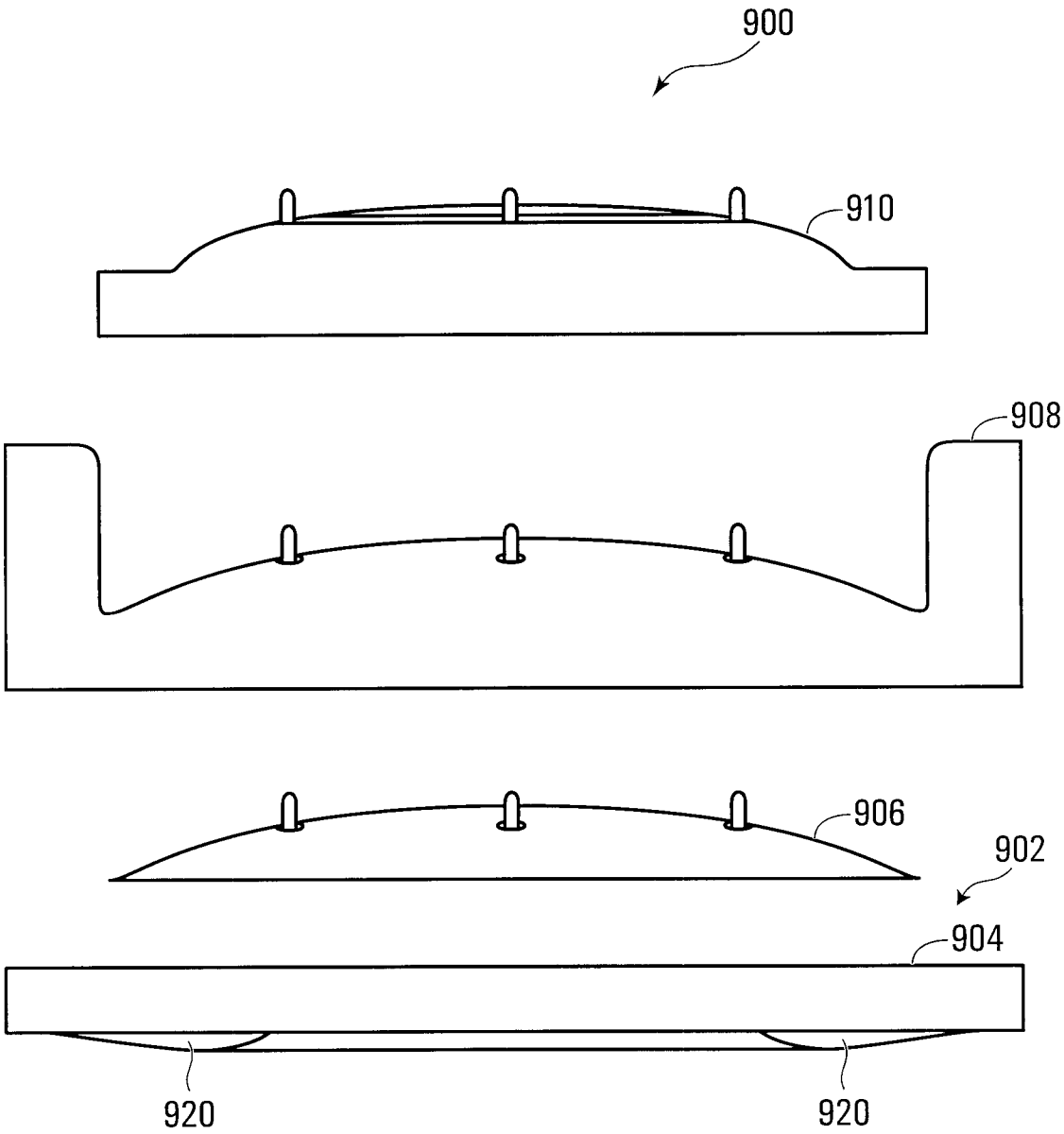

FIG. 13

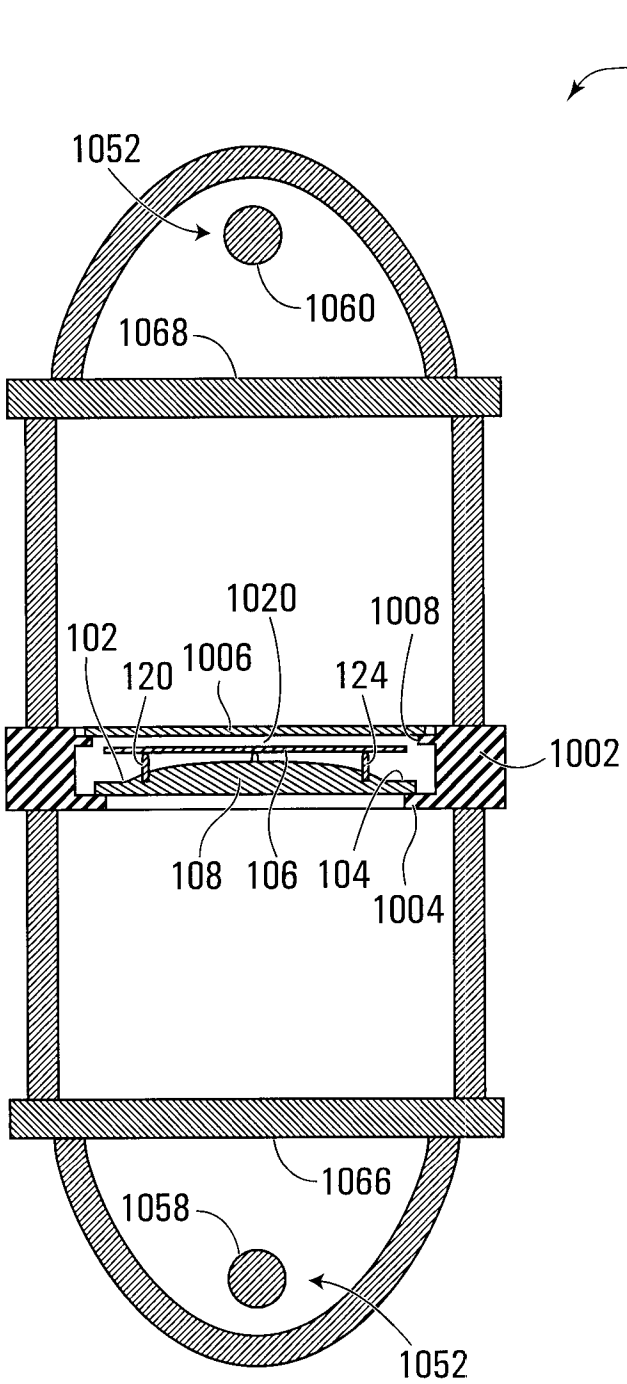
1000
1052
1060
1068
1020
1008
102
120
1006
124
1002
108
106
104
1004
1066
1058
1052

FIG. 14

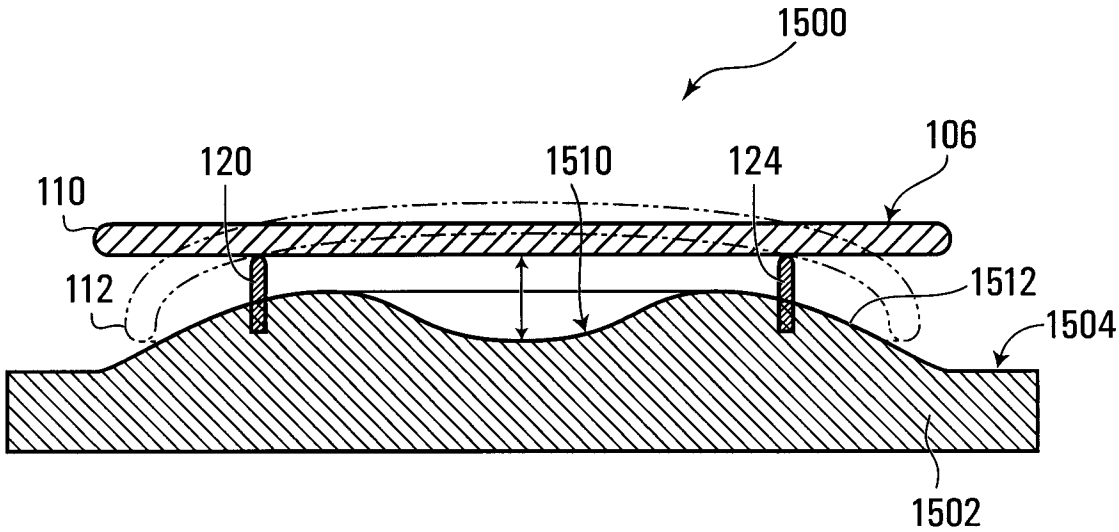

FIG. 15

INTERNATIONAL SEARCH REPORT

International application No.
PCT/CA2007/002070

A. CLASSIFICATION OF SUBJECT MATTER
IPC: ***B23Q 3/00*** (2006.01) , ***F27D 5/00*** (2006.01) , ***H01L 21/324*** (2006.01) , ***H01L 21/477*** (2006.01) , ***H01L 21/683*** (2006.01)
According to International Patent Classification (IPC) or to both national classification and IPC

B. FIELDS SEARCHED

Minimum documentation searched (classification system followed by classification symbols)
B23Q 3/00, F27D 5/00, H01L 21/324, H21L 21/477, H21/683, B23Q 1/*, B23Q 3/*, H01L 21/*, B25B 11/*

Documentation searched other than minimum documentation to the extent that such documents are included in the fields searched

Electronic database(s) consulted during the international search (name of database(s) and, where practicable, search terms used)
Delphion (US, EP, WO, DE, JP Abstracts), Canadian Patents Database, Questel-Orbit (Qpat)
(Keywords: substrate, wafer, holder, support, plate, frame, bracket, non-uniform, uneven, thermal, distortion, deformation)

C. DOCUMENTS CONSIDERED TO BE RELEVANT

Category*	Citation of document, with indication, where appropriate, of the relevant passages	Relevant to claim No.
Y	US 20050284371 A1 (MCFADDEN, R. S. et al.) 29 December 2005 (29-12-2005) *Abstract; Figs. 1-8B; Paras. 0017-0035; Claims*	1-5, 7, 11 and 39-42
Y	US 20050133167 A1 (CAMM, D. M. et al.) 23 June 2005 (23-06-2005) *Abstract; Figs. 1-9; Paras. 0054-0095; Claims*	1-5, 7, 11 and 39-42
A	US 3610613 A (WORDEN, R. D.) 5 October 1971 (05-10-1971) *Whole document*	1-47
A	US 6196532 B1 (OTWELL, R.) 6 March 2001 (06-03-2001) *Whole document*	1-47
A	US 20040178553 A1 (CAMM, D. M. et al.) 16 September 2004 (16-09-2004) *Whole document*	1-47

[ ] Further documents are listed in the continuation of Box C.

[X] See patent family annex.

* Special categories of cited documents :

"A" document defining the general state of the art which is not considered to be of particular relevance

"E" earlier application or patent but published on or after the international filing date

"L" document which may throw doubts on priority claim(s) or which is cited to establish the publication date of another citation or other special reason (as specified)

"O" document referring to an oral disclosure, use, exhibition or other means

"P" document published prior to the international filing date but later than the priority date claimed

"T" later document published after the international filing date or priority date and not in conflict with the application but cited to understand the principle or theory underlying the invention

"X" document of particular relevance; the claimed invention cannot be considered novel or cannot be considered to involve an inventive step when the document is taken alone

"Y" document of particular relevance; the claimed invention cannot be considered to involve an inventive step when the document is combined with one or more other such documents, such combination being obvious to a person skilled in the art

"&" document member of the same patent family

Date of the actual completion of the international search	Date of mailing of the international search report
30 January 2008 (30-01-2008)	06 March 2008 (06-03-2008)

Name and mailing address of the ISA/CA	Authorized officer
Canadian Intellectual Property Office Place du Portage I, C114 - 1st Floor, Box PCT 50 Victoria Street Gatineau, Quebec K1A 0C9 Facsimile No.: 001-819-953-2476	Colin Watts 819- 934-9085

INTERNATIONAL SEARCH REPORT
Information on patent family members

International application No.
PCT/CA2007/002070

Patent Document Cited in Search Report	Publication Date	Patent Family Member(s)	Publication Date
US 2005284371A1	29-12-2005	CN 1961097A	09-05-2007
		WO 2006012048A2	02-02-2006
		WO 2006012048A3	28-09-2006
US 2005133167A1	23-06-2005	AU 2003287837A1	14-07-2004
		CN 1729554A	01-02-2006
		CN 1902746A	24-01-2007
		DE 10393962T5	02-03-2006
		JP 2006511970T	06-04-2006
		JP 2007519232T	12-07-2007
		KR 20050085856A	29-08-2005
		US 2004178553A1	16-09-2004
		WO 2004057650A1	08-07-2004
		WO 2005059991A1	30-06-2005
US 3610613A	05-10-1971	None	
US 6196532B1	06-03-2001	None	
US 2004178553A1	16-09-2004	AU 2003287837A1	14-07-2004
		CN 1729554A	01-02-2006
		CN 1902746A	24-01-2007
		DE 10393962T5	02-03-2006
		JP 2006511970T	06-04-2006
		JP 2007519232T	12-07-2007
		KR 20050085856A	29-08-2005
		US 2005133167A1	23-06-2005
		WO 2004057650A1	08-07-2004
		WO 2005059991A1	30-06-2005