United States Patent

[11] 3,578,316

[72] Inventors **Donald W. Watson**
Arlington Heights;
Herbert C. Artelt, Jr., Wildwood, Ill.

[21] Appl. No. **774,956**
[22] Filed **Nov. 12, 1968**
[45] Patented **May 11, 1971**

[73] Assignee **Xerox Corporation**
Rochester, N.Y.

[54] **DRIVING APPARATUS FOR ARTICLE FEEDERS**
5 Claims, 6 Drawing Figs.

[52] **U.S. Cl.** **271/54,** 271/44, 271/57
[51] **Int. Cl.** **B65h 7/18**
[50] **Field of Search** 271/54, 14, 44

[56] **References Cited**
UNITED STATES PATENTS

2,578,779	12/1951	Black	271/54
3,245,682	4/1966	Pfleger et al.	271/54X

Primary Examiner—Evon C. Blunk
Assistant Examiner—Joseph Wegbreit
Attorneys—Paul M. Enlow, Norman E. Schrader, James J. Ralabate, Ronald Zibelli and Frederick E. McMullen

ABSTRACT: A driving apparatus for shuttle type article feeders, the apparatus including a latch mechanism adapted to couple the shuttle with a reciprocating driving element, abutment means selectively interposed in the path of movement of the latch mechanism and contactable with an operating arm of the latch mechanism to cause release of the latch mechanism and uncoupling of the shuttle, means to restrain the shuttle against movement when uncoupled, and control means limiting uncoupling of the shuttle to a predetermined shuttle operating position.

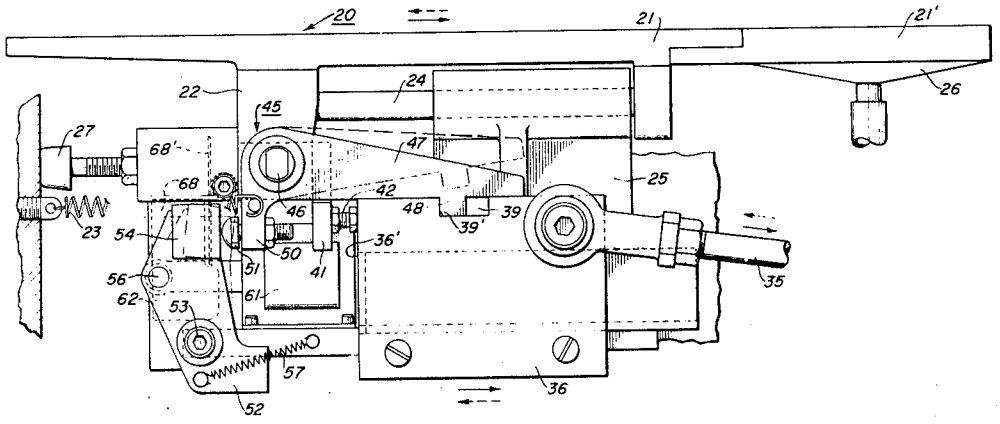

Patented May 11, 1971 3,578,316

4 Sheets-Sheet 1

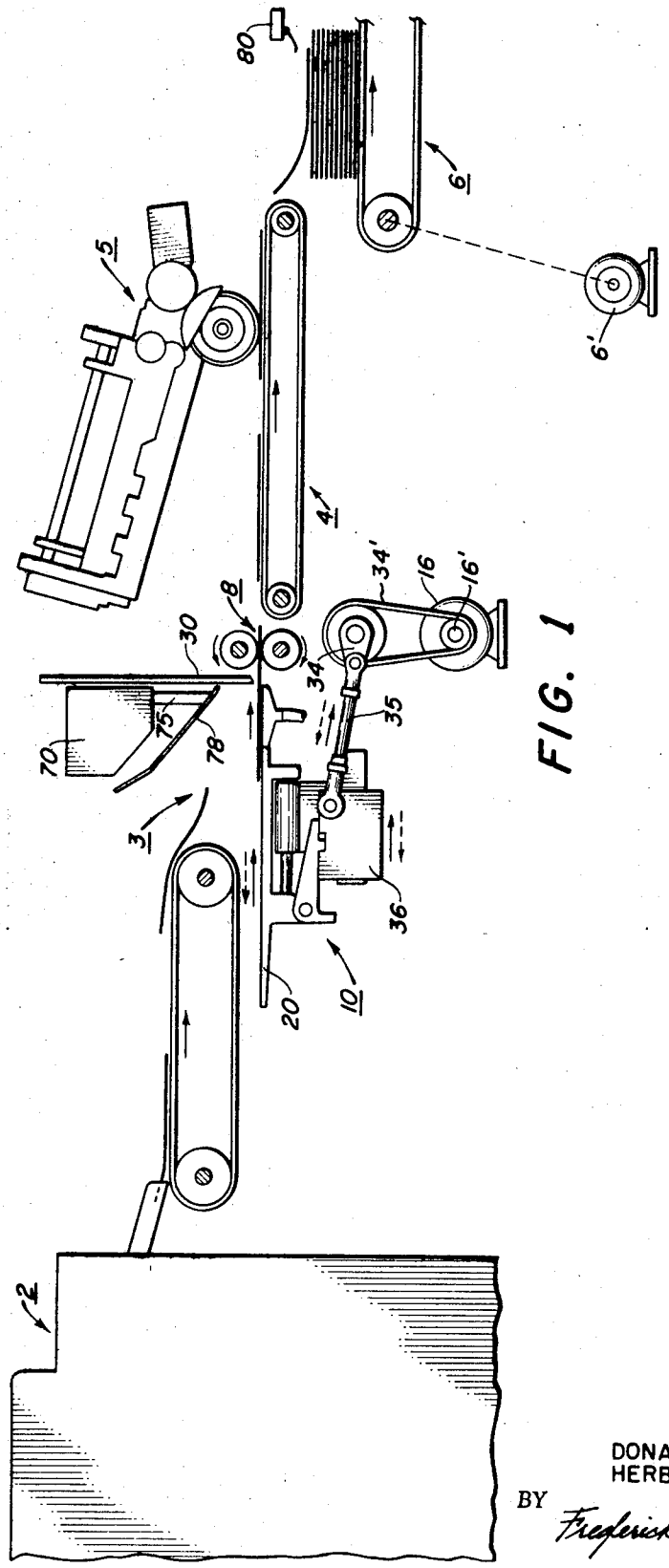

FIG. 1

INVENTORS
DONALD W. WATSON
HERBERT C. ARTELT, JR.
BY Frederick E. McMullen
ATTORNEY

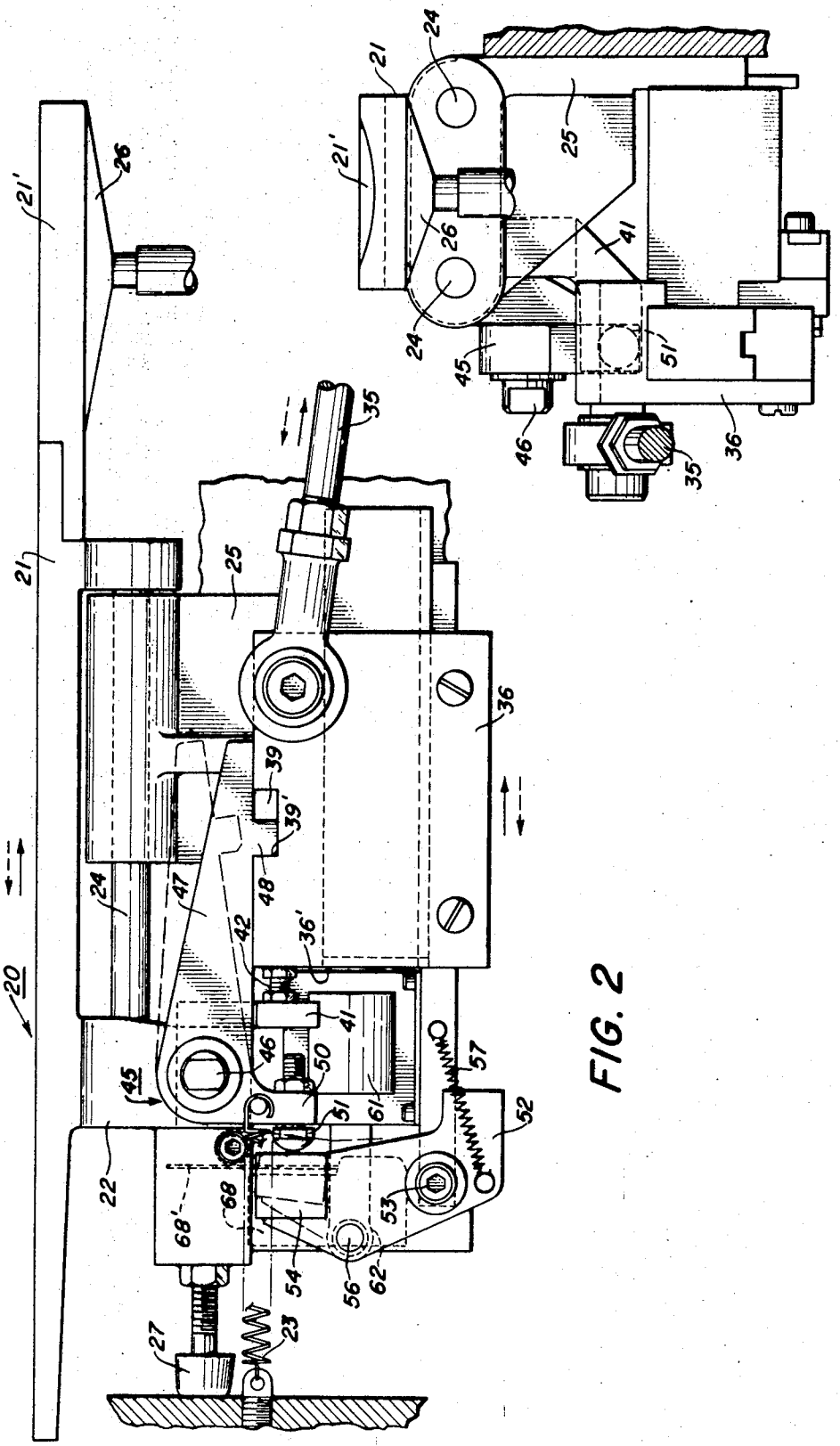
20
21
21'
22
23
24
25
26
27
35
36
36'
39
39'
41
42
45
46
47
48
50
51
52
53
54
56
57
61
62
68
68'

FIG. 2

FIG. 4

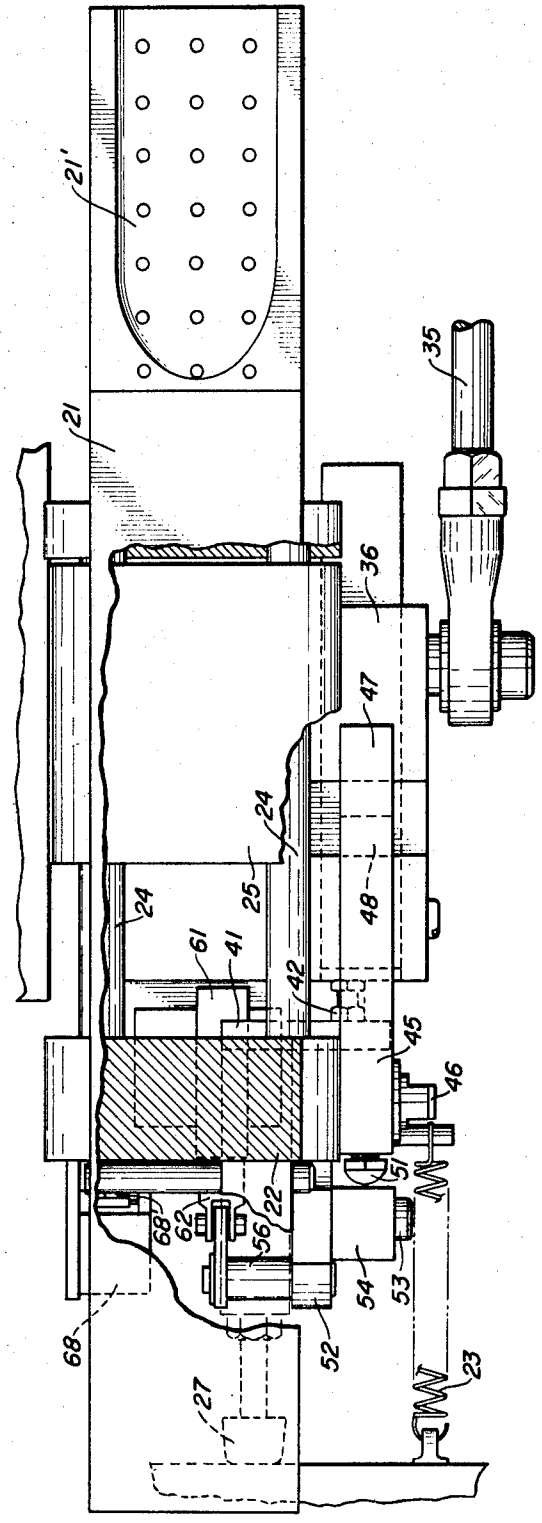

FIG. 3

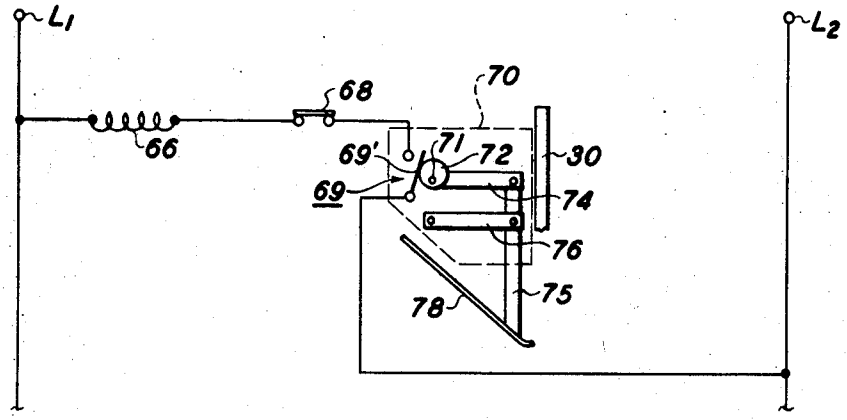
L1
L2
68
70
66
69'
71
72
30
69
74
76
75
78

FIG. 5

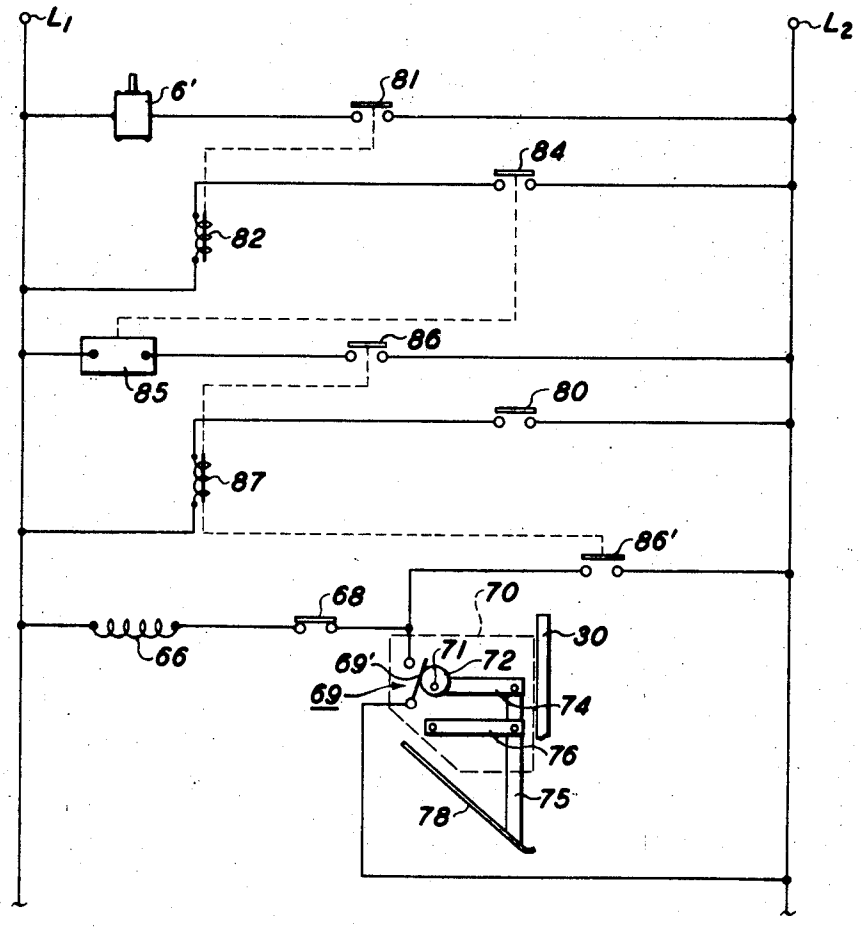
L1
L2
6'
81
84
82
86
85
80
87
86'
68
70
66
69'
71
72
30
69
74
76
75
78

FIG. 6

DRIVING APPARATUS FOR ARTICLE FEEDERS

This invention relates to an article feeder, and more particularly, to a driving means for article feeders.

Article processing systems such as a system for labeling or addressing articles, for example, magazines, newspapers, etc., usually comprise a number of operating stations. For example, a labeling system includes an article source such as a printing machine, a machine to affix the labels or otherwise transfer the information thereon to the individual articles, a station for receiving and stacking the labeled articles, and transport means to move the articles throughout the system.

It is understood that the article processing speeds of the various stations or components that make up an article processing system must be compatible if integrated and efficient system operation is to be assured. In the aforementioned labeling system, mating the article source with the labeling machine is particularly critical. Usually an attempt is made to operate the labeling machine at the same speed as the article source. However, matching the article processing speeds of the article source with the labeling machine is difficult to accomplish, and constant attention is required to assure that the processing speeds remain equalized during system operation.

The potential article processing or labeling speed of present day labeling machines is normally in excess of the maximum speed at which articles can be generated by a single source, as for example, by a printing machine. This ability of the labeling machine to be operated at a greater speed than that of the article source presents a substantial advantage if use can be made thereof. For if the labeling machine is set to label articles faster than the speed at which articles to be labeled are generated by the article source, and the labeling machine is stopped and started in response to the supply of articles ready for labeling, the difficult job of trying to match the processing speeds of the article source with the labeling machine is avoided. Unfortunately, certain components of labeling machines, for example, the label transferring means, usually require an interval, once the machine is started, to reach operating condition, and this has heretofore effectively ruled out the possibility of mating the article source with the labeling machine through the exigency of operating the labeling machine at a higher speed than that of the article source and accommodating the speed differential through repeated stopping and starting of the labeling machine.

It is a principal object of the present invention to provide a new and improved driving apparatus for an article feeding means.

It is a further object of the present invention to provide an improved coupling mechanism for the shuttle of an article feeding means which enables the feeder shuttle to be readily engaged and disengaged from the power source.

It is an object of the present invention to provide a disconnectable driving apparatus for an article feeder incorporating means effective, on disconnecting of the driving apparatus, to retain the article feeder in a predetermined position.

This invention relates to an article handling apparatus comprising in combination, a movable shuttle to feed articles, driving means; means for coupling the shuttle with the driving means whereby to operate the shuttle; means adapted when actuated to release the coupling means and stop the shuttle; and means adapted on release of the shuttle to restrain the shuttle against movement.

Other objects and advantages will be apparent from the ensuing description and drawings in which:

FIG. 1 is a schematic view showing an article processing system incorporating the article feeder driving means of the present invention;

FIG. 2 is a side view partially in section showing the article feeder driving means of the present invention,

FIG. 3 is a top plan view of the feeder driving means shown in FIG. 2;

FIG. 4 is a front view of the feeder driving means shown in FIG. 2;

FIG. 5 is a view showing the control means for the feeder driving means of the present invention, and

FIG. 6 is a view showing another type of control means for the feeder driving means of the present invention.

Referring to the drawings, there is shown the feeder driving means, designated generally by the numeral **10**, of the present invention. As will appear, driving means **10** enables an article feeder **3** to be readily uncoupled from motor **16** when it is desired to interrupt the feed of articles. In the exemplary arrangement, article feeder **3** comprises a reciprocating type feeding shuttle **20** adapted to feed articles forward to transport **4** serving a labeling machine **5**. Other types of article feeders may, however, be readily contemplated.

To facilitate explanation, article feeder **3** is illustrated as supplying articles such as magazines, newspapers, sheets, etc. from a suitable finishing machine such as printing press **2** to article transport **4** and labeling machine **5**. Other types of finishing machines such as envelope sealers, postage meter printers, wrapping machines, etc. may be contemplated. The labeled articles leaving labeling machine **5** are suitably disposed of as by stacking on discharge conveyor **6**. Other devices for handling labeled articles such as sorting machines, wrapping machines, trimming machines, etc. may be contemplated. As is understood by those skilled in the art, labeling machine **5** normally incorporates a plurality of operating stations where the several functions necessary to transfer the label information to the articles are carried out. For example, labeling machine **5** may include a cutting station for cutting a continuous web of labels fed thereto into individual labels for application to the articles, a glue station for applying adhesive to the labels, and a transfer station for applying labels to the individual articles. Article transport **4** serves to bring the articles, in seriatim, into operative relationship with labeling machine **5**. Preferably, the drive requirements for transport **4** and for the operating stations of labeling machine **5** are met by motor **16**.

As will appear, the feeder driving means **10** of the present invention facilitates control of labeling machine **5** and of the article processing system itself in response to operating conditions upstream of and/or downstream of labeling machine **5**. More particularly, feeder driving means **10**, which enables article feeder **3**, transport **4**, and labeling machine **5** to be operated at a processing rate or speed slightly greater than that of the finishing machine, printing press **2**, by permitting ready stopping and starting of article feeder **3** without shutdown of labeling machine **5**, avoids the problem of trying to match or equalize the article processing rate of printing press **2** with that of labeling machine **5**. Similarly, feeder driving means **5** to be interrupted as when conveyor **6** is indexed without shutdown of the article supply means, printing press **2**, obviates article jams, mistiming, etc. as may occur where articles are continually supplied to a moving albeit nonfeeding article feeding shuttle.

To prevent loss of label information, suitable means such as a photocell actuated control (not shown) are preferably provided to interrupt the supply of labels to the transfer station of labeling machine **5** whenever the supply of articles to be labeled thereto is exhausted following uncoupling of shuttle **20**.

Referring particularly to FIGS. **2**, **3** and **4** of the drawings, shuttle **20** of article feeder **3** comprises a platelike part **21** having a perforated segment **21'** adjacent the forward or discharge end thereof. Base **22** of plate **21** is slidably journaled for reciprocating movement by rods **24**. Rods **24** are suitably supported on frame **25**. Spring **23** serves to bias shuttle **20** in the return direction. An adjustable bumper **27** is provided to limit return movement of shuttle **20**. As will appear, articles to be fed rest on plate **21** of shuttle **20** and are carried forward by shuttle **20** into the nip of pinch roll pair **8**, which may be driven from motor **16** by suitable means (not shown), and onto transport **4**.

The perforated segment **21'** of shuttle plate **21** communicates through control valve **26** with a suitable source of vacuum (not shown). As is understood by those skilled in the art, valve **26** serves to selectively communicate segment **21'** of shuttle plate **21** with the vacuum source on the forward or

feed stroke of shuttle 20 (the direction shown by the solid line arrow of FIG. 2) whereby the bottommost article resting on shuttle plate 21 is carried forward. On the return stroke of shuttle 20 (the direction shown by the dotted line arrow of FIG. 2), valve 26 is closed to terminate the vacuum supply to segment 21' of shuttle plate 21.

To limit the number of articles fed by shuttle 20, a discharge gate 30 is spaced above shuttle plate 21 adjacent the discharge side thereof. As will be understood, gate 30 cooperates with shuttle plate 21 to limit the number of articles which may be carried forward with each stroke of shuttle 20. Preferably, gate 30 is adjusted to permit shuttle 20 to carry one article at a time forward to transport 4.

Shaft 16' of motor 16 is drivingly connected to eccentric 34 by drive belt 34'. Crank arm 35 is pinned to eccentric 34 and shuttle driving slider 36. Eccentric 34, on rotation of motor shaft 16', reciprocates slider 36.

Slider 36 comprises a blocklike part suitably journaled for reciprocating motion on frame 25. Slider 36, which is disposed below shuttle 20, is provided with a recess 39 in the upper surface thereof. Base 22 of shuttle 20 has a drive arm 41 depending therefrom into the path of movement of slider 36. An adjustable stop 42 is preferably provided on wall 36' of slider 36. As will appear, stop 42 of slider 36, on the return stroke thereof (as shown by the dotted line arrow of FIG. 1) engages shuttle drive arm 41 to return shuttle 20 to the start position.

A substantially L-shaped latch member 45 is pivotally secured to base 21 of shuttle 20 as by pin 46. One leg 47 of member 45 projects toward driving slider 36, downwardly projecting drive lug 48 thereof being adapted to seat within recess 39 of slider 36. As will appear, recess 39 is slightly larger than lug 48. The remaining leg 50 of latch member 45 extends downwardly, the terminal end thereof being opposite release abutment 54. As adjustable stop 51 is provided on leg 50 of latch member 45. As will appear, actuation of release solenoid 61 moves abutment 54 forward so that on return movement of shuttle plate 21 (in the direction of the dotted line arrow), stop 51 on leg 50 of latch member 45 engages abutment 54 to swing latch member in a counterclockwise direction and lift drive lug 48 from recess 39 in slider 36.

With latch member 45 in the solid line position, drive lug 48 is disposed within recess 39 of slider 36. During the forward stroke of slider 36 (in the direction of the solid line arrow), the inner wall 39' of recess 39 engages drive lug 48 of latch member 45 to move shuttle 20 forward in an article feeding direction (the direction shown by the solid line arrow). On the return stroke of slider 36, abutment 42 engages drive arm 41 to return shuttle 20 to the start position. Abutment 42 of slider 36 is preferably adjusted to engage shuttle drive arm 41 following a slight degree of free movement of slider 36 to the left as seen in FIG. 2 following reversing of slider 36. This small degree of lost motion occurring in the transfer of drive to shuttle 20 from latch member 45 to drive arm 41 relieves pressures on drive lug 48 of latch member 45 to facilitate lifting of lug 48 from recess 39.

To disengage latch member 45, release lever 52 is provided. Lever 52, which is pivotally supported on frame 25 by pin 53 adjacent latch member 45, has abutment 54 thereof disposed opposite stop 51 on leg 50 of latch member 45. Rotation of lever 52 in a clockwise direction to the dotted line position shown in FIG. 2 moves abutment 54 thereof into the path of movement of stop 51 so that on return movement of shuttle 20, stop 51 strikes abutment 54 to pivot latch member 45 in a counterclockwise direction and lift drive lug 48 out of recess 39 in slider 36.

Movement of release lever 52 is effected by a solenoid 61 having an armature 62 pinned to release lever 52 at 56. As may be understood, actuation of solenoid 61 retracts armature 62 to rotate release lever 52 in a clockwise direction to the dotted line position whereby abutment 54 thereof is disposed in the path of movement of latch member 45. Spring 57 biases release lever 52 in the return or counterclockwise direction.

Referring to FIG. 5 of the drawings, operating coil 66 for solenoid 61 is connected through control switches 68, 69 across a suitable source of electrical power, designated for convenience by leads L_1, L_2. Switches 68, 69 are in series with one another, simultaneous closure thereof completing an energizing circuit to coil 66 of solenoid 61 to withdraw drive lug 48 and uncouple shuttle 20 as described heretofore.

Control switch 68, which is preferably normally opened, is supported on frame 25 proximate shuttle 20. Operating arm 68' of switch 68 is arranged in the path of return movement of shuttle plate 21, plate 21 engaging switch arm 68' to close switch 68 whenever shuttle 20 nears the start position. As will appear more fully, shuttle plate 21 is arranged to close control switch 68 slightly before the point at which stop 51 on latch member 45 would contact abutment 54 of release lever 52 when release lever 52 is in the forward position (the dotted line position shown in FIG. 2). On displacement of shuttle 20 in the forward or feeding direction, switch 68 is opened.

Control switch 69 responds to the supply of articles awaiting feeding on shuttle plate 21 and is supported within housing 70. Housing 70 is supported by frame 25 above shuttle 20 by suitable means (not shown) with housing 70 preferably disposed adjacent the inside wall of discharge gate 30. Preferably, housing 70 is arranged for limited raising and lowering movement to enable the response of control switch 69 to be adjusted.

A switch shaft 71 is rotatably journaled in housing 70 adjacent switch 69. Cam 72 on shaft 71 is disposed opposite arm 69' of switch 69, cam 72 serving to open and close switch 69 in response to predetermined rotation of shaft 71. Operating arm 74 projects from shaft 71 and has depending link 75 pinned to the terminal end thereof. Support arm 76 is rotatably mounted in housing 70 below arm 74, the axis of rotation of arm 76 being coplanar with that of shaft 71. Support arm 76 is pinned to link 75.

Link 75, which projects downwardly toward shuttle 20, terminates in an upwardly sloping shoe 78 adapted to rest on the topmost one of the articles awaiting feed on shuttle 20. Preferably, suitable spring means (not shown) are provided to bias link 75 and shoe 78 thereon in a downward direction.

In operation, articles to be labeled as from printing press 2, are fed onto shuttle plate 21 underneath the article sensing shoe 78 of control switch 69. Assuming there to be a supply of articles on shuttle plate 21, control switch 69 is opened and solenoid coil 66 is deenergized. Spring 57 accordingly holds release lever 52 retracted and abutment 54 thereof is withdrawn from the path of movement of stop 51 on leg 50 of latch member 45.

Drive lug 48 of latch member 45 is accordingly disposed in recess 39 of slider 36 which, during system operation, is continually reciprocated by means of eccentric 34. On the forward stroke of slider 36, shuttle 20 is coupled thereto by means of latch member 45 and shuttle 20 moves forward to feed the lowermost article resting on plate 21 thereof underneath discharge gate 30 and into the nip of pinch roll pair 8. Roll pair 8 feed the article onto transport 4 which brings the article into operative relationship with labeling machine 5 whereat a label or label information is applied in a manner known to those skilled in the art. From labeling machine 5, the labeled article is transported to discharge conveyor 6.

On the return stroke of driving slider 36, stop 42 thereof engages depending shuttle drive arm 41 to return shuttle 20 to the start position. As shuttle 20 nears the start position, control switch 68 is closed, it being understood that switch 78 is reopened with subsequent movement of shuttle 20 in the article feeding direction.

Inasmuch as the article processing speed of labeling machine is higher than that of the article producing means, printing press 2, the supply of articles to be labeled on shuttle plate 21 is reduced. Article responsive shoe 78, which rides upon the topmost article on shuttle plate 21, accordingly descends turning shaft 71 in clockwise direction. When the supply of articles on shuttle plate 21 is temporarily exhausted

or reaches a predetermined minimum as determined by the response setting of the actuating mechanism for control switch **69**, cam **72** closes switch **69**.

As described heretofore, control switch **68** is momentarily closed each time shuttle **20** nears the start position. Simultaneous closure of both control switches **68, 69** completes an energizing circuit to solenoid operating coil **66**. Armature **62** of solenoid **61** accordingly rotates release lever **52** clockwise to place abutment **54** thereof in the path of movement of stop **51** on leg **50** of latch member **45**. As shuttle **20** moves nearer the start position, stop **51** contacts abutment **54** to rotate latch member **45** in a counterclockwise direction and lift drive lug **48** from recess **39** in slider **36**. With drive lug **48** disengaged from slider **36**, shuttle **20** is stopped while slider **36** continues to reciprocate. Spring **23** holds shuttle **20** in the fully retracted position as determined by the setting of bumper **27** to prevent stop **42** of the reciprocating slider **36** from striking the now uncoupled shuttle **20**.

Inasmuch as the article source, printing press **2**, continues to furnish articles for labeling to article feeder **3**, the supply of articles on shuttle plate **21** builds up lifting article responsive shoe **78** and turning shaft **71** counterclockwise. It is understood that with shuttle plate **21** stationary and fully retracted, the possibility of misfeed or jamming of the articles feeding onto plate **21** is avoided or greatly minimized.

Following lifting of shoe **78** to a predetermined height, representing a predetermined supply of articles on shuttle plate **21**, cam **72** opens control switch **69** to interrupt the energizing circuit to solenoid coil **66**. With deenergization of coil **66**, spring **57** retracts release lever **52** to withdraw abutment **54** thereof enabling drive lug **48** of latch member **45** to descend onto slider **36**. Where recess **39** of the reciprocating slider **36** is opposite drive lug **48**, lug **48** descends into recess **39** and drive to shuttle **20** is immediately resumed. Where recess **39** and the descending drive lug are out of phase, lug **48** rides on the surface of slider **36** until recess **39** thereof comes opposite lug **48** at which point lug **48** descends into recess **39** to resume driving of shuttle **20** in the manner described heretofore.

It is understood that where labeled articles are stacked, as by discharge conveyor **6**, suitable controlling means, such as stack level responsive switch **80**, may be provided. Referring particularly to FIG. **6** of the drawings where like numbers refer to like parts, discharge conveyor drive motor **6'** is connected through relay contact **81** across leads L_1, L_2. Control relay **82** is connected through contact **84** of a suitable timing device **85** across leads L_1, L_2. Timing device **85** is connected through contact **86** of control relay **87** across leads L_1, L_2. Relay **87** is connected through stack level responsive switch **80** across leads L_1, L_2. A second contact **86'** of relay **87** parallels control switch **69**.

In operation, closure of switch **80** in response to a predetermined stack height energizes relay **87** closing contacts **86, 86'** thereof. Closure of contact **86'** readies the energizing circuit to solenoid operating coil **66** for operation, closure of control switch **68** energizing coil **66** to operate driving means **10** and uncouple shuttle **20** in the manner explained heretofore.

Closure of contact **86** energizes timing device **85** which serves, following an interval of time sufficient for articles remaining on transport **4** following stopping of shuttle **20** to be labeled and transported onto the stack of articles on conveyor **6**, to close contact **84** thereof energizing control relay **82**. Relay **82** closes contact **81** to complete an energizing circuit to motor **6'** and start conveyor **6**.

It is understood that suitable means (not shown) are provided to stop conveyor **6** and recouple shuttle **20** when removing of the stack of labeled articles is completed. Similar controlling arrangements for feeder driving means **10** may be envisioned for other types of labeled article handling devices. Additionally, other controlling means (not shown) may be provided to operate control switch **69** and uncouple shuttle **20** in response to a predetermined system malfunctions such as an article jam. Further, the feeder driving means **10** may be arranged to uncouple feeder shuttle **20** following movement of shuttle **20** forward rather than when shuttle **20** is retracted.

While the invention has been described with reference to the structure disclosed herein, it is not confined to the details set forth; but is intended to cover such modifications, or changes as may come within the scope of the following claims.

We claim:

1. In an apparatus for handling articles including a movable shuttle to feed articles, the combination of:

reciprocable driving means;

means for coupling said shuttle with said driving means whereby to operate said shuttle, said coupling means including a one-way latch member operative during movement of said driving means in one direction to couple said shuttle with said driving means, driving pressures on said latch member being relieved during movement of said driving means in the opposite direction;

means adapted when actuated to disengage said latch member and release said coupling means and stop said shuttle in a predetermined article feeding position; and

switch means for controlling actuation of said release means to limit actuation of said release means to an interval when driving pressures on said latch member are relieved.

2. The apparatus according to claim **1**, including spring means to bias said shuttle in said predetermined position following disengagement of said latch member and stopping of said shuttle.

3. The apparatus according to claim **1**, in which said latch member is pivotally supported on said shuttle and cooperable with said driving means to couple said shuttle with said driving means, said latch member having a trigger arm projecting therefrom; said release means including an abutment movable upon actuation of said release means into the path of movement of said latch member trigger arm, contact of said latch member trigger arm with said release means abutment causing said latch member to pivot whereby to disengage said latch member from said driving means and uncouple said shuttle.

4. The apparatus according to claim **3**, in which said release means includes motor means to move said abutment.

5. The apparatus according to claim **3**, in which said driving means includes a reciprocable drive member adapted on movement in one direction to drivingly engage said shuttle and move said shuttle in said one direction; said drive member having a wall portion, said latch member having a wall portion abuttable with said drive member wall portion on movement of said drive member in the opposite direction whereby to move said shuttle in said opposite direction; said drive member being arranged to drivingly engage said shuttle following predetermined lost motion of said drive member in said one direction whereby driving pressures between said drive member wall portion and said latch member wall portion are relieved to facilitate disengagement of said latch member by said release means.