(19) DANMARK

(10) **DK/EP 2076064 T3**

Patent- og Varemærkestyrelsen

(12) Oversættelse af europæisk patentskrift

(51) Int.Cl.: ***H 04 R 25/00 (2006.01)***

(45) Oversættelsen bekendtgjort den: **2017-07-17**

(80) Dato for Den Europæiske Patentmyndigheds bekendtgørelse om meddelelse af patentet: **2017-04-26**

(86) Europæisk ansøgning nr.: **07124085.7**

(86) Europæisk indleveringsdag: **2007-12-27**

(87) Den europæiske ansøgnings publiceringsdag: **2009-07-01**

(84) Designerede stater: **AT BE BG CH CY CZ DE DK EE ES FI FR GB GR HU IE IS IT LI LT LU LV MC MT NL PL PT RO SE SI SK TR**

(73) Patenthaver: **Oticon A/S, Kongebakken 9, 2765 Smørum, Danmark**

(72) Opfinder: **Rasmussen, Karsten Bo, c/o Oticon A/S, Kongebakken 9, 2765 Smørum, Danmark**
Petersen, Svend Oscar, c/o Oticon A/S, Kongebakken 9, 2765 Smørum, Danmark

(54) Benævnelse: **Høreanordning, der omfatter en form og et udgangsmodul**

(56) Fremdragne publikationer:
WO-A-00/76271
WO-A-2007/038712
DE-A1- 3 927 797
US-A1- 2007 071 265

DESCRIPTION

FIELD OF THE INVENTION

[0001] The present invention refers to a hearing device comprising an ear mould, and specifically to a hearing device having a venting channel arrangement.

BACKGROUND OF THE INVENTION

[0002] Many of today's hearing aids comprising an ear mould or the like include a venting channel to provide suitable ventilation and to avoid the undesired occlusion effect, which reduces comfort for the user. The occlusion effect is caused when a hearing aid (here termed hearing device) or any part thereof is inserted into the user's ear canal and thereby defines a sealed or closed portion of the user's ear canal between the hearing aid or the part thereof and the user's ear drum. For example, in CIC (completely in the ear canal)/ ITC (in the canal)/ ITE (in the ear) hearing aids a blocking of the ear canal of the user wearing the hearing aid is possible, and this causes a build-up of a low frequency sound pressure, resulting in the above-mentioned and well-known occlusion effect.

[0003] This phenomenon can, to a large extent, be suppressed by implementing a venting channel in the hearing aid acoustically connecting the portion of the ear canal of the user sealed (or closed) by the hearing aid or a corresponding part thereof with the outside to obtain a balance of pressure and to raise comfort for the user. An increase in the diameter (effective diameter, cross-sectional area) of the venting channel will reduce the possibility of occurrence of such an occlusion effect, but higher frequencies of sound (corresponding frequency components) will be able to overcome the inertia of the acoustic mass of the venting channel. A venting channel having a relatively large cross sectional area will allow a broader spectrum of sound to escape through it than a venting channel having a relatively smaller cross sectional area. In other words, an otherwise desirable large-diameter ear canal more efficiently propagates the amplified higher frequencies of the ear and might thus create an undesired feedback effect. Preferably, venting channel(s) of a hearing aid has/have to compromise gain with occlusion the best way possible. The dimensions of the venting channel have to be carefully determined, because a relatively large effective diameter will result in less occlusion, but will also reduce the amount of possible gain before feedback is introduced. When a relatively small effective diameter is provided, the amount of gain which is possible in the hearing aid is increased, but the occlusion effect becomes more and more pronounced. It is in this connection advantageous to have a venting channel that would simultaneously permit low frequency sounds to leave the ear canal at a certain time, but also to prevent higher frequency (such as from 2 kHz to 6 kHz) sound from exciting the ear canal and causing feedback which is very uncomfortable for the user of the hearing aid.
Moreover, the provision of a venting channel in a hearing aid, which is effective in view of

providing a pressure balance in the user's ear canal and thereby reducing the occlusion effect, requires a certain diameter or certain dimensions to obtain the desired result. This reduces flexibility when manufacturing the hearing aid since a certain space of the hearing aid mould is occupied by the venting channel.
DE 39 27 797 A1 deals with an intra-aural hearing aid with an earpiece which contains a microphone, an amplifier, an earphone, a battery compartment with battery and a balancing channel leading from the inside to the outside, closed off by a cover plate. The balancing channel partially or completely surrounds at least a part of the sound outlet channel from the earphone.

SUMMARY OF THE INVENTION

[0004] It is an object of the present invention to provide a hearing device having a venting channel arrangement that can be implemented in a small mould of the hearing device.

[0005] According to the present invention, this object is accomplished by a hearing device according to claim 1.

[0006] The output transducer is a speaker or earphone (also known as a receiver) for producing sound waves directed to a user's eardrum.

[0007] The ridge or channel extends along the outer surface of the output module and/or the inner surface of the mould along a straight line or a helix. In an embodiment, localized protrusions from a surface (either from the inner surface of the mould or the outer surface of the output module or from both) are arranged to fully or partially fix the output module in the opening of the mould and at the same time allow a certain ventilation.

[0008] The axial length of the plurality of venting channels may be shorter than the axial length of the output module, and preferably the plurality of venting channels can be evenly distributed around the output module in the circumferential direction thereof.

[0009] In general a venting channel is a tubular opening comprising air to provide a good path for aligning the pressure between the enclosed volume and the open side of the mould. However, the at least one venting channel may at least be partly filled with a filler material (e.g. a porous material) to further control the sound propagation properties of the vent. Preferably the filler material can replaceably be inserted in the at least one venting channel. An advantage of the present invention is that such filler material can be conveniently replaced from time to time according to need (due to introduction of impurities, e.g. from serumen), because the vents can be made accessible from the surface of the output module (and/or from the inner surface of the mould opening). In a prior art solution with a distributed vent comprising a multitude of smaller vent cross-sections formed as through going tubes, such replacement is more complex and at times virtually impossible.

[0010] The plurality of venting channels leads to a compact and space-saving arrangement of the hearing device. For a given optimal cross-sectional area of one tubular vent, the corresponding cross-sectional area distributed on a number of (necessarily smaller) vent channels provides substantially the same effect at relatively low frequencies (e.g. lower than 2 kHz), but such an arrangement has a larger acoustical attenuation at relatively higher frequencies (e.g. larger than 2 kHz). The insertion of a porous material into the venting channels (over a part or all of the longitudinal extension of the vent) provides an additional possibility to control the acoustic attenuation of a venting channel of a given cross-sectional area and longitudinal extension. In an embodiment, a specific cross-sectional area of a single, air-filled tubular vent to provide an intended reduction of the occlusion effect is determined (for a given ear canal and enclosed volume). By design of a 'distributed' vent with the same (total) cross-sectional area, the resulting effect on occlusion is maintained (mainly determined by the low-frequency part of the signal), but with an increased feedback margin at higher frequencies (e.g. > 2 kHz) due to the increased attenuation at these frequencies. By using a number of relatively smaller vents (with or without porous damping material in some or all of the vents over a part or its full length), and placing the vents close to the receiver outlet in the ear (as is ensured by the present construction of the output module and the location of the venting channels at the interface between the output module and the mould), a well-balanced condition is provided resulting in an intended reduction of the occlusion effect and an improved feedback condition (reduced feedback).

[0011] The cross-sectional shape of an individual of the plurality of venting channels can have any appropriate form, e.g. rectangular (such as square) or elliptical (such as circular) of triangular (e.g. a groove). Typically, the cross-sectional shapes of the number of vents will be identical. They may however be different, e.g. depending on the needed attenuation, particular geometrical constraints, etc. In an embodiment, the cross-sectional shape of a vent is identical over its longitudinal extension. This need not be the case, however. In an embodiment, the cross-sectional form and/or area changes along the length of the vent, e.g. increasing from one end to the other. In an embodiment, the vent has a larger cross-sectional area at the end facing the enclosed volume (cf. B in Fig. 1) than at the end facing the outside (cf. A in Fig. 1), thereby providing an improved 'collection' of sound vibrations in the enclosed volume.

[0012] The foregoing and other objects, features and advantages of the present invention will become more apparent from the following detail the description in conjunction with the corresponding drawings referring to embodiments and developments of the present invention.

[0013] As used herein, the singular forms "a," "an," and "the" are intended to include the plural forms as well, unless expressly stated otherwise. It will be further understood that the terms "includes," "comprises," "including," and/or "comprising," when used in this specification, specify the presence of stated features, integers, steps, operations, elements, and/or components, but do not preclude the presence or addition of one or more other features, integers, steps, operations, elements, components, and/or groups thereof. It will be understood that when an element is referred to as being "connected" or "coupled" to another element, it can be directly connected or coupled to the other element or intervening elements maybe

present. Furthermore, "connected" or "coupled" as used herein may include wirelessly connected or coupled. As used herein, the term "and/or" includes any and all combinations of one or more of the associated listed items.

BRIEF DESCRIPTION OF THE DRAWINGS

[0014] The drawings according to the present invention show in

Fig. 1 an overall view of a hearing device according to a first embodiment which does not form part of the present invention,

Fig. 2A and 2B an enlarged view of an output module as well as of a venting channel arrangement shown in Fig. 1,

Figs. 3A and 3B different shapes of venting channel arrangements according to the first embodiment,

Figs 4A and 4B an enlarged view of an output module and a venting channel arrangement according to a second embodiment which does not form part of the present invention,

Fig. 5 a partial view of an embodiment of a hearing device part, Fig. 5A being a cross-sectional view along a longitudinal axis of the output module, Fig. 5B and Fig. 5C being two different possible cross-sectional views perpendicular to the longitudinal axis, and

Fig. 6 a partial view of a further embodiment of a hearing device part.

[0015] The figures are schematic and simplified for clarity, and they just show details which are essential to the understanding of the invention, while other details are left out. Throughout, the same reference numerals are used for identical or corresponding parts.

DETAILED DESCRIPTION OF EMBODIMENTS

[0016] A hearing device according to the present invention is typically capable of being body worn. In an embodiment, an input transducer and the output transducer are located in the same physical body and located in the ear canal when in an operational state. In a particular embodiment, the hearing device comprises at least two physically separate bodies, which are capable of being in communication with each other by wired or wireless transmission (be it acoustic, ultrasonic, electrical of optical). In an embodiment, an input transducer is located in a first body and the output transducer is located in a second body (here in the output module mounted in a mould located in the ear canal of a user). In an embodiment, the hearing device comprises more than one input transducer. The term 'two physically separate bodies' is in the present context taken to mean two bodies that have separate physical housings, possibly not

mechanically connected or, alternatively, essentially only connected by one or more guides for acoustical, electrical or optical propagation of signals.

First embodiment

[0017] The present invention is described in the following in conjunction with the schematic diagram of Fig. 1 showing an overall view (cross-sectional view in part) of the structure and arrangement of a hearing device 10 according to the first embodiment of the present invention. The hearing device 10 comprises three separate physical bodies, 1) circuitry unit 11, 2) mould 18 and 3) output module 15 mounted in a through-going opening of the mould, the circuitry unit and the output module being electrically connected. The circuitry unit 11 can e.g. form part of a module located behind the ear of a user.

[0018] According to the representation shown in Fig. 1, the hearing device 10 comprises a casing, (shell) at least enclosing electronic circuitry providing a signal processing unit of the hearing device. The electronic circuitry comprises a circuitry unit 11 comprising a central control unit 12 (controller) that controls the hearing device 10 to be worn by the user. The central control unit 12 is connected to an input unit 13 which may be a microphone (such as a directional microphone system, possibly comprising a number of differently located microphones) for picking up sound signals (sound pressure information) of any sound or noise surrounding the user. Alternatively, the input unit 13 may be a sensor for sensing an electric signal representing a sound signal picked up otherwise. The components of the circuitry unit 11, such as the central control unit 12 and the input unit 13 are powered by the power supply unit 14. The power supply unit 14 may comprise any suitable battery or rechargeable battery.

[0019] The circuitry unit 11 and in particular the central control unit 12 thereof, which serves as a controller, receives an electric input signal representing acoustic sound inputs (that is, the sound signals or sound pressure information surrounding the user) and provides a data evaluation and processing of the sound signals. The processed sound signals (in electric form) are fed to and are received by an output module 15 comprising an output transducer (receiver 16), which is connected to the central control unit 12 via an electric wiring W (here two wires are shown, but any appropriate number of wires can be used). Alternatively, such transmission can be performed via a wireless coupling, e.g. an inductive coupling between inductive coils of the circuitry unit and the output module, respectively. The transmission from one unit to the other could alternatively be by any other appropriate means, e.g. optical or acoustic.

[0020] The output module 15 is located remote (separate) from the circuitry unit 11 of the hearing device 10 as discussed above, and is - when in operation - arranged in an ear canal EC of the user.

[0021] To this end, the output module 15 is inserted into a mould 18 which can directly be inserted into the user's ear canal EC and which is adapted to fit therein (e.g. by a customized moulding process, cf. e.g. EP 1 345 470 or EP 1 295 509). The mould 18 comprising a through

going opening and having inserted therein the output module 15 constitutes a component of the hearing device 10, which can be arranged remotely from the circuitry unit 11 of the hearing device 10, and the output module 15 has its only connection with the circuitry unit 11 by means of the electric wires W. The output module 15 includes a housing 17 for accommodating the receiver 16 which acts as a transducer for converting the electrical signals into sound waves or acoustic signals perceivable by the user.

[0022] The hearing device 10 according to the arrangement shown in Fig. 1 is discussed for example on the basis of a RITE hearing device (RITE=Receiver In The Ear), wherein the output module 15 (including receiver 16) is positioned in the user's ear canal EC for normal operation of the hearing device 10, whereas the circuitry unit 11 including the circuitry of the hearing device 10 as discussed above can be placed in the ear or preferably behind the ear of the user.

[0023] Regarding the regular or normal function of the hearing device, as already mentioned above, the input unit 13 picks up the surrounding sound or noise (sound signals, sound pressure), and a data evaluation is carried out in the central control unit 12 of the circuitry unit 11 for processing the picked-up sound signals to obtain suitable electrical signals (typically adapted to a specific user's needs), which allow a reproduction of the processed sound signals by the output module 15. That is, the surrounding sound or noise (sound signals) picked-up by the input unit 13 and in a suitable manner processed by the central control unit 12 are transmitted in the form of electrical signals through the electric wires W to the output module 15, the output module 15 being located in the user's ear canal EC and reproducing the sound signals delivered from the central control unit 12.

[0024] In Fig. 1 the mould 18 basically closes the user's ear canal EC and defines a closed or sealed portion or volume B in the user's ear canal EC between the mould 18 (in conjunction with the output module 15) and the user's ear drum (not shown in Fig. 1).

[0025] A portion A of the user's ear canal EC is the portion thereof which opens to the outside. This open portion A receives to a certain extent any sound or noise (sound signals, sound pressure) from the outside, i.e. the prevailing noise and sound surrounding the user. When mounted in an operational state of a user's ear canal, the mould 18 separates the open portion A and the closed portion B of the user's ear canal.

[0026] In the arrangement of the hearing device 10 as shown in Fig. 1 the elements, such as the input unit 13 and the central control unit 12 of the circuitry unit 11, the electric wires W and the output module 15 constitute an electro-acoustic signal path by means of which the regular function of the hearing device 10 is provided (optionally including the adaptation of the signal to a user's particular needs). The output module 15 represents the function of the output transducer or speaker, and the output module 15 is driven by the central control unit 12 to provide the required electro-acoustic output after a corresponding processing and amplification.

[0027] The acoustic conditions in the sealed portion B of the user's ear canal EC depend to a certain extent on the arrangement of the hearing device 10 in the user's ear canal EC and the structure thereof, and the arrangement of the mould 18 inserted in the user's ear canal EC.

[0028] In order to avoid the occlusion effect the hearing device 10 according to the present invention includes at least one venting channel 19 which is arranged on the output module 15 (in connection with an outer surface of the housing 17 of the output module such as in or on the surface of the housing 17) and/or on or in the inner surface of the through going opening of the mould in which the output module is mounted when in operation.

[0029] The cross-sectional diameter of a typical circular vent can e.g. be 1.4 mm when formed as one tubular vent in a micro-mould. A corresponding vent area can e.g. be distributed on 3 smaller vent channels, each possibly having a semi-circular or rectangular form. In case of semi-circularly shaped vents having a radius of 0.6 mm the total area of the three identical vents will be approximately equal to that of the 1.4 mm diameter single vent. The semi-circular vents could - as an alternative to one large vent running parallel to the module through the mould - be made as grooves in the outer surface of the output module (also termed the receiver module) and/or in the inner surface of the opening.

[0030] For the further description of the arrangement of the at least one venting channel 19 according to the present invention, reference is now made to Figs. 2A and 2B.

[0031] In general, a venting volume in a hearing device according to the present invention can be conveniently arranged between the matching surfaces of the output module and the mould, e.g. mainly as grooves in one of the surfaces, the other functioning as a 'lid' or mainly as channels formed by parallel running ridges on one surface, the other functioning as a 'lid', or combinations thereof. In the present embodiment as shown in Fig. 2, the at least one venting channel 19 is arranged on the (surface of the) output module 15. More specifically, the at least one venting channel 19 extends substantially along a longitudinal axis 20 of the output module 15 (the longitudinal axis 20 being the direction in which the tube-shaped output module 15 extends, the axial direction) and is directly arranged on the output module 15, that is, on the outer surface of housing 17. The at least one venting channel 19 may be basically parallel to the longitudinal axis 20. There may also be provided a plurality of such venting channels 19 which are arranged on the output module 15 and which are basically parallel to each other and basically parallel to the longitudinal axis 20 of the output module. Alternatively, they may follow other curve forms along the axial direction, e.g. a helix form to provide a longer vent-extension path for a given length of the output module covered by the mould (e.g. to provide a larger acoustic attenuation for a given cross-sectional area of the vent).

[0032] The at least one venting channel 19 (or plurality of such venting channels 19) constitutes a hollow channel or duct which provides a connection between the sealed portion B of the user's ear canal EC and the open portion A thereof and provides a necessary balance of pressure to reduce the occurrence of the undesired occlusion effect. That is, ventilation is possible through the at least one venting channel 19 (duct) or the plurality of venting channels

19 which are arranged on the output module 15 and which also run through the mould 18 in which the output module 15 together with the at least one venting channel 19 is inserted.

[0033] Fig. 2B shows a cross-sectional view of the housing 17 accommodating the output module and being provided with the at least one venting channel 19 along the line A-A shown in Fig. 2A. The mould 18 in which the output module is inserted is not shown in Fig. 2B, but is anticipated to have an opening whose cross-section match that of the output module (at least over a part of its longitudinal extension) to provide a fitting match, when the output module is inserted in the mould, which allows the venting of the closed part (B in Fig. 1) of the ear canal to be controlled by the venting channels 19. The channel(s) 19, may alternatively (or additionally) be formed by grooves in the inner surface of the opening of the mould. This has the advantage that a substantially smooth (e.g. circular) periphery of housing 17 of the output module can be used to 'close' the groove(s) in the inner surface and to thereby form the vent channel(s) 19.

[0034] The arrangement of Fig. 2B shows that the plurality of venting channels 19 (for example as here three venting channels 19) may basically be evenly distributed on the circumference of the output module 15. The plural venting channels 19 are here arranged on the output module 15 (outer surface 17 thereof) to extend along the longitudinal axis 20.

[0035] The at least one venting channel 19 or the plural venting channels 19 as outlined in Fig. 2B together represent the effect of one single bigger venting channel. That is, the plural venting channels 19 according to the first embodiment of the present invention, each having a smaller effective diameter than one bigger venting channel, are e.g. arranged such that the combination of the plural venting channels 19 basically provide an effective diameter corresponding to one bigger venting channel according to the references above but the plural venting channels 19 do not provide the disadvantages of one single bigger venting channel. In an embodiment, a predefined cross-sectional area A of a venting channel is distributed on a number n of separate venting channels together having the predefined cross-sectional area ($A=SUM(a_i)$, where A is the predefined area and a_i is the area of the ith separate vent and SUM is a summation over the i=1, 2, ..., n separate vents).

[0036] For inserting the output module 15 in conjunction with the at least one venting channel 19 or the plural venting channels 19 a corresponding opening is to be made in the mould 18 so that the combination of the output module 15 and the plural venting channels 19 will properly and tightly fit to this specific opening in the mould 18. The shape of the opening in the mould 18 may have the shape of the arrangement of the output module 15 and the venting channels 19 according to Fig. 2B. Moreover, the axial length $L_{vent}(z)$ of the venting channels 19 is shorter than the axial length $L_{module}(z)$ of the output module 15 in its longitudinal direction, z. On the other hand, the axial length $L_{vent}(z)$ of the venting channels 19 is longer than the length of the fitting opening of the mould $L_{mould}(z)$, so that a ventilation of the closed volume (B in Fig. 1) can be achieved when the output module is mounted in the mould and the mould is mounted in its operational location in the ear canal of a user.

[0037] The mould is typically made of a form stable plastic material by an injection moulding process or formed by a rapid prototyping process, e.g. a numerically controlled laser cutting process (see e.g. EP 1 295 509 and references therein).

[0038] The porous filter material is chosen to preferably have an acoustically damping effect at relatively higher frequencies (e.g. f > 2 kHz). The porous filter material may additionally attenuate unintentional longitudinal vent resonances at even higher frequencies (e.g. f > 8 kHz). In an embodiment, the filter material is a sintered plastic material. In an embodiment, the filter material is a composite material, e.g. comprising a matrix of fibres. In an embodiment, the filter material is an open pore polyethylene. In an embodiment, the filter material is a foam ceramic. Various appropriate porous materials are described in US 6,574,343 and references therein.

[0039] For explanation purposes according to the first embodiment of the present invention Figs. 2A and 2B show the provision of three venting channels 19, each having a relatively small effective diameter (small cross-sectional area), but the present invention is not limited to this particular number of venting channels 19. Depending upon the acoustic properties of the hearing device 10 to be adapted to the user's ear canal EC, a smaller or higher number of venting channels 19 can be used. That is, any other suitable number of venting channels necessary for obtaining the desired adaptation of the hearing device 10 to the user's acoustical and medical needs can be implemented. For example, four or more very small venting channels 19 can be arranged preferably basically in parallel to the longitudinal axis 20 of the output module 15 and can be distributed in a predetermined manner along the circumferential direction of the output module 15.

[0040] In Figs. 2A and 2B the plural venting channels 19 are preferably evenly distributed in the circumferential direction of the housing 17. The present invention is, however, not limited to such a distribution of the plural venting channels 19, but any further suitable predetermined distribution with symmetry or not can be provided. The determination of an arrangement of the plural venting channels 19 departing from the basically symmetric arrangement shown in Fig. 2B as well as the determination of a suitable number of venting channels 19 having the smaller effective diameter depend upon the conditions for adapting the hearing device 10 to the hearing loss of the user (amplification), the structure of the user's ear canal EC and the user's preferences.

[0041] The arrangement of the venting channels 19 as shown in Figs. 2A and 2B at a boundary between the output module 15 and the mould 18 provide a replacement of a conventional bigger venting channel with a number of (plural) venting channels (duct, opening) along the boundary between the output module 15 and the mould 18. The necessary effective diameter of the plural venting channels 19 provides a distribution of the necessary space (corresponding opening in the mould 18) which is advantageous in comparison to the provision of one single conventional venting channel which occupies rather much space at one side of the output module 15.

[0042] A different shape, arrangement and positioning of particular venting channels 19 is shown in Figs. 3A and 3B.

[0043] In Fig. 3A which basically represents a cross-sectional view according to line A-A of Fig. 2A there is shown an arrangement of, for example, three particular venting channels 19 which have a more flat outer shape and are positioned in a similar manner as the plural venting channels 19 shown in Fig. 2B. The shape of the venting channels 19 according to Fig. 3A which protrude from the outer surface of the output module 15 requires a corresponding opening in the mould 18 (not shown in Figs. 3A and 3B) so that the combination of the venting channels 19 and the output module 15 can properly be inserted into and fit in the mould 18.

[0044] The present invention is of course not limited to the shape, the number and the location (distribution) of the venting channels 19 to the arrangement of Fig. 3A, and a smaller or higher number of venting channels 19 can be used with a distribution different from the (preferably even) distribution shown in Fig. 3A, and also the venting channels 19 may have a different outer shape.

[0045] In a similar manner as it is the case in Fig. 2A, the venting channels basically extend along the outer surface of the output module 15, and basically parallel to the longitudinal axis 20 thereof.

[0046] The channel(s) 19 may further, alternatively (or additionally), be formed by grooves in the inner surface of the opening of the mould.

[0047] A further development of the present invention and specifically of the arrangement and shape of the venting channels 19 is shown in Fig. 3B. In this case as represented in Fig. 3B the plural venting channels 19 are provided in and are formed by a grooved or recessed portion of the output module 15, and extend in parallel to the output module 15. The arrangement shown in Fig. 3B therefore provides an outer appearance or shape of the housing 17 of the output module 15 which has no protruding portions since the plural venting channels 19 can be embedded within the circular shape (cross-sectional area) of the output module 15.

[0048] As an opening in the mould 18 for inserting the output module 15 and for fixing the output module 15 to the mould 18 a simple circular opening is necessary. This may facilitate manufacturing of the mould 18.

[0049] The present invention is however not limited to the example of an arrangement of the venting channels 19 on the output module 15 as shown in Fig. 3B. Also in this case the number of venting channels 19 can be modified and the positioning or distribution of the venting channels 19 on the circumferential surface of the output module 15 is not limited to the situation shown in Fig. 3B and also not limited to symmetry. That is, a higher number of venting channels can be implemented, the venting channels basically extending along the longitudinal axis 20 of the output module 15. Further, other shapes and/or cross-sectional areas of the vent channels can be provided according to the requirements of the particular case.

[0050] According to a modification of the first embodiment of the present invention a combination of the arrangement shown in Figs. 3A and 3B is possible resulting in the provision of plural venting channels 19 on the outer surface of the output module 15, one or more vent channels protruding to a certain extent from this outer surface and one or more vent channels being arranged in a corresponding recessed portion of the output module 15.

[0051] In the foregoing description it was mentioned that the at least one venting channel 19 or plural venting channels 19 are provided in the form of openings or ducts to allow ventilation and specifically a balance of pressure to raise the comfort of the user of the hearing device 10 and to reduce the uncomfortable occlusion effect. Hence, the at least one venting channel 19 allows the passing of air. If individual venting channels are very narrow, useful thermodynamic losses will be created, but such narrow channels may have difficulties in a manufacturing process.

[0052] According to a further modification of the first embodiment of the present invention the at least one venting channel 19 may be provided with a porous material (21 in Fig. 4) which is arranged or inserted in the at least one venting channel 19. That is, the at least one venting channel 19 is at least partly (or possibly completely) filled with the porous material, such as e.g. a fibre based material or a sintered plastic or an open pore polyethylene, this porous material still allowing the penetration of air to provide the intended balance of pressure when being inserted in the user's ear canal EC (Fig. 1).

[0053] In at least one of the plurality of venting channels 19 the porous material may be inserted to fill this particular venting channel 19 partly or completely with the porous material. Alternatively, more than one of the plurality of venting channels 19 or all the venting channels 19 may be provided with the porous material at least partly or completely.

[0054] The provision of the porous material inside the at least one venting channel 19 or in some or all of the plurality of venting channels 19 preferably leads to a predetermined attenuation of the high frequency transmission through the venting channel due to thermodynamic losses and/or due to transmission losses when the sound travels from the sealed portion B through at least one venting channel 19 being at least partly or completely filled with the porous material to the outside (open, not sealed) region A. The porous insert is preferably selected to provide a predetermined attenuation of sound. In more detail, primarily the highest frequencies of the sound (high frequency components thereof) transmitted through the at least one venting channel 19 are preferably attenuated and the feedback margin for these frequency components thereby increased. That is, the possibility of causing a feedback condition based on higher frequency components is considerably reduced.

[0055] Moreover, a better feedback margin for a given size of the at least one venting channel 19 is obtained due to the fact that the openings of the at least one venting channel 19 are located very close to the output portion of the output module 15 (receiver) since the at least one venting channel or the plural venting channels are arranged on the outer surface of the

output module 15. This has a positive effect on the feedback margin at mid-range frequencies or frequency components. The exact improvement depends on the size of the residual sealed portion B (cavity) of the user's ear canal EC.

[0056] The porous material provided to at least one of the plural venting channels 19 (partly or completely) is preferably inserted in a replaceable manner.

[0057] The arrangement according to an aspect of the invention of at least one venting channel 19 or a plurality of venting channels 19 each having a relatively small cross-sectional area makes it possible to insert the output module 15 into a small mould (micro mould) having relatively small dimensions (e.g. in the mm-range e.g. cross-sectional dimensions of 5 mm in diameter and a length of 7 mm in an axial direction). The bore in a mould (for example a micro mould) of a conventional hearing aid for inserting the single bigger venting channel occupies much space (e.g. a diameter of 1.4 mm). Due to the geometrical advantages based on the plurality of smaller venting channels 19 and resulting from the absence of one single large venting channel, deeper fittings are possible. This increases comfort of the user wearing the hearing aid 10. As described above, the venting channels 19 according to the present invention can be provided by removing material from the output module 15 or from the mould 18.

[0058] The smaller size of the output module 15 and including the plurality of venting channels 19 leads to a compact and space-saving arrangement. The insertion of the porous material 21 into the venting channels 19 leads to the possibility of providing a venting channel with a certain cross-sectional area without sacrificing the feedback margin. The division of the effective cross-sectional area into the plurality of venting channels each having a smaller cross-sectional area provides an effective reduction of the undesired occlusion effect while the occurrence of any feedback condition is prevented.

Second embodiment

[0059] Based on the representation of Figs. 4A and 4B a second embodiment of the present invention is described in the following.

[0060] Elements and means shown in Figs. 4A and 4B which have already been described in conjunction with the first embodiment and which are shown in any of the preceding Figures (Figs. 1 to 3) and which have the same function are provided with the same reference number, and a further detailed explanation thereof is omitted.

[0061] Fig. 4A, which is a cross-sectional view, shows the arrangement of an output module 15 in a mould 18, the output module including a housing 17 in which a receiver is accommodated. Electric wires W provide a connection of the output module to a circuitry unit 11 (not shown in Fig. 4, see Fig. 1). The circuitry unit 11 according to the second embodiment has the same function as that of the first embodiment, and a further description is therefore

omitted.

[0062] Fig. 4A further shows that the output module 15 is inserted into a portion (wall) of a mould 18. That is, the mould 18 is provided with an opening for inserting the housing 17 of the output module 15 so that the output module 15 can be supported by the mould 18. Preferably, the output module 15 has a cylindrical shape and extends along a longitudinal axis 20 (axial direction). Moreover, the length of the venting channel 19 in the direction of the longitudinal axis 20 of the output module 15 is greater than the thickness (in a longitudinal direction of the output module) of the mould 18 at the position where the output module 15 is inserted. Alternatively or additionally, the inner surface of the opening of the mould 18 may comprise a channel, e.g. a corresponding indentation or recess (optionally comprising a porous material 21), *overlapping* with that of the output module in a longitudinal direction, so that a larger surface of contact between output module and mould is provided.

[0063] Furthermore, basically at the circumferential surface of the output module 15 facing the opening in the mould 18 a porous material 21 is arranged. More specifically, at the portion of the output module 15 facing the mould 18 a recessed portion 22 such as a groove is provided for accommodating a layer of a porous material 21. The recessed portion 22 extends in the circumferential direction around the output module 15, and the layer of the porous material 21 is accommodated in the recessed portion and also extends in the circumferential direction around the output module 15.

[0064] Fig. 4B shows a cross-sectional view along the line B-B shown in Fig. 4A. The inner circle of the structure shown in Fig. 4B represents the output module 15 and having the recessed portion which results in a reduced diameter of the output module 15. At the outer side of the recessed portion, that is, in the circumferential direction of the recessed portion 22 the layer of the porous material 21 is arranged and represented in Fig. 4B as an annular portion in a range between the reduced diameter of the output module 15 and basically the maximum diameter thereof.

[0065] As can be seen from the context of Fig. 4A, the layer of the porous material 21 arranged on the recessed portion 22 of the output module 15 is adjacent to the inner surface of the opening in the mould 18, and the recessed portion 22 filled with the porous material 21 between the output module 15 and the mould 18 constitutes a venting channel 19 defined between the output module 15 and the mould 18 (opening).

[0066] In more detail, the venting channel 19 defined by the recessed portion 22 has a ring-shaped cross-sectional area based on a small difference between the outer diameter of the output module 15 and the smaller diameter of the output module 15 at the recessed portion 22. The space (cross-sectional area) of the venting channel according to Figs. 4A and 4B is completely filled with the porous material 21 and forms the venting channel 19 defined at the interface between the output module 15 and the mould 18. That is, in the case of the arrangement according to the second embodiment of the present invention the porous material preferably has a rigidity which allows a tight fit to the mould 18.

[0067] The present invention is however not limited to a complete filling of the recessed portion 22 of the output module 15 with the porous material 21, and this porous material 21 can also be inserted in or accommodated by the recessed portion in part, resulting in the arrangement of the porous material 21 in predetermined parts of the recessed portion 22. Alternatively, the recessed portion can be void of any filling material (other than air).

[0068] Moreover, the present invention is not limited to a ring-shaped cross-sectional area of the venting channel 19 defined according to Figs. 4A and 4B between the output module 15 and the opening of the mould 18. Hence, any suitable cross-sectional area of the output module 15 accommodating the receiver 16 and of the form and shape of the recessed portion 22 can be implemented, resulting in a corresponding opening in the mould 18 so that the recessed portion, possibly including partly or completely the porous material 21, properly fits into the opening of the mould 18. One alternative is e.g. a helical groove in the outer surface of the output module allowing air to propagate from the enclosed volume to the outside. The groove can likewise be filled with a material to control its acoustic propagation properties.

[0069] The preferably ring-shaped venting channel 19 according to the second embodiment shown in Figs. 4A and 4B extends along a longitudinal axis 20 of the output module 15.

[0070] The venting channel 19 defined between the output module 15 and the mould 18 on the basis of a recessed portion 22 in the output module 15 provides the same advantages as the arrangement of a plurality of venting channels 19 according to the first embodiment of the present invention.

[0071] The porous material 21 has a filtering function. The porous material 21 can be replaced when the output module 15 is removed from the mould 18 for maintenance purposes. Due to the fact that the dimensions of the output module 15 can be kept small despite the fact that an effective venting channel 19 is provided, the output module 15 (including the receiver 16) can be inserted in a small mould 18, such as a micro mould. The porous material (porous filter, porous layer) which is inserted in a recessed portion around the receiver module (at the outer surface of the housing 17) is therefore useful for obtaining high frequency attenuation in a predetermined manner.

[0072] Fig. 5 shows a partial view of an embodiment of a hearing device part according to the present invention comprising an output module 15 fittingly inserted in a through going opening of a mould 18. In the embodiment of Fig. 5A, a layer of an appropriate filler material 21, e.g. a porous material, is *applied* to the outer surface 171 of the housing 17 of the output module 15 over a part of its longitudinal extension (instead of being embedded in a recess in the surface as in Fig. 4A), thereby providing a convenient mechanical solution with a tight fit between the filler material 21 of the vent 19 channel and the inner surface 181 of the opening of the mould 18 (which is only partially shown). Fig. 5A shows a cross-sectional view along a longitudinal axis of the output module. Fig. 5B and Fig. 5C shows two different possible cross-sectional views perpendicular to the longitudinal axis. Fig. 5B illustrates an embodiment comprising a

ring-formed layer of filler material 21. Fig. 5C illustrates an embodiment comprising 4 rectangular ridges comprising filler material 21 and symmetrically located around the periphery of the housing 17 of the output module 15, the module being located in a mould 18 having a correspondingly matching opening cross section.

[0073] Fig. 6 shows a partial view of an embodiment of a hearing device part according to the present invention comprising an output module 15 fittingly inserted in a through going opening of a mould 18. A helical ridge 172 is arranged on the outer surface of the enclosure 17 of the output module so that a helical vent channel 19 is thereby formed. The vent channel may in an embodiment be filled with a filler material 21 at least over a part of its length (e.g. at an end of the vent channel, e.g. at the end facing the outer environment (volume A in Fig. 1), or alternatively at the end facing the enclosed volume (B in Fig. 1), or both).
It is to be noted that the Figures described above do not represent real proportions but only provide a schematic view which is helpful for explanation and understanding of the subject matter of the present invention explained above on the basis of embodiments and modifications thereof. Moreover, the present invention has been illustrated and described in detail by means of the foregoing description in conjunction with the drawings, and such illustrations and descriptions are to be considered illustrative or exemplary and not restrictive.

REFERENCES CITED IN THE DESCRIPTION

This list of references cited by the applicant is for the reader's convenience only. It does not form part of the European patent document. Even though great care has been taken in compiling the references, errors or omissions cannot be excluded and the EPO disclaims all liability in this regard.

Patent documents cited in the description

- DE3927797A1 [0003]
- EP1345470A [0021]
- EP1295509A [0021] [0037]
- US6574343B [0038]

EP nummer 2076064

Høreanordning, der omfatter en form og et udgangsmodul

Patentkrav

1. Høreanordning, der omfatter:
en indgangsenhed (13), der er indrettet til frembringelse af elektriske signaler, der repræsenterer lydsignaler,
en styreenhed (12), som er forbundet til indgangsenheden, og som er indrettet til behandling af de elektriske signaler,
et udgangsmodul (15), der omfatter en udgangstransducer, som er forbundet til styreenheden (12), hvor udgangsmodulet definerer en udvendig flade (17), og
en form (18), hvor udgangsmodulet (15) er anbragt i en åbning i formen, og hvor formen er indrettet til at have åbningen med en indvendig flade (181), og hvor dimensionerne og formen af den udvendige flade af udgangsmodulet, åbningen og den indvendige flade af formen er indrettede til at tillade udgangsmodulet at blive anbragt i åbningen i det mindste over en del af deres fælles rumlige forlængelse, KENDETEGNET VED, AT
en flerhed af udluftningskanaler (19) er indrettet omkring udgangsmodulet, der strækker sig langs en længdeakse (20) deraf, hvor flerheden af udluftningskanaler (19) er indrettet mellem den indvendige flade (181) af formen (18) og den udvendige flade (17) af udgangsmodulet (15), når udgangsmodulet er anbragt i åbningen af formen, hvor flerheden af udluftningskanaler (19) er indrettet mellem den udvendige flade (17) af udgangsmodulet (15) og den indvendige flade (181) af formen (18) ved at anbringe en eller flere forhøjninger i en af, eller begge, flader, hvor den ene eller de flere forhøjninger har en forlængelseskomponent langs længdeaksen.

2. Høreanordning ifølge krav 1, hvor den aksiale længde af flerheden af udluftningskanaler er kortere end den aksiale længde af udgangsmodulet.

3. Høreanordning ifølge krav 1 eller 2, hvor flerheden af udluftningskanaler er jævnt fordelt omkring udgangsmodulet i en omkredsretning deraf.

4. Høreanordning ifølge et hvilket som helst af kravene 1-3, der omfatter et høreapparat.

5. Høreanordning ifølge et hvilket som helst af kravene 1-4, hvor en tværsnitsform af en enkelt af flerheden af udluftningskanaler har en rektangulær eller elliptisk eller trekantet form.

6. Høreanordning ifølge et hvilket som helst af kravene 1-5, hvor en tværsnitsform og/eller et område af en enkelt af flerheden af udluftningskanaler ændrer sig langs længden af udluftningskanalen, for eksempel forøges fra den ene ende til den anden.

7. Høreanordning ifølge krav 6, hvor udluftningskanalen har et større tværsnitsareal ved en ende, der vender mod en lukket del (B) af brugerens

øregang, end ved en ende, der vender mod ydersiden, når anordningen er anbragt i en øregang hos en bruger.

8. Høreanordning ifølge et hvilket som helst af kravene 1-7, hvor en længde af i det mindste en af flerheden af udluftningskanaler langs længdeaksen (20) af udgangsmodulet er større end tykkelsen langs længdeaksen af formen (18), ind i hvilken udgangsmodulet indsættes.

9. Høreanordning ifølge et hvilket som helst af de foregående krav, hvor i det mindste en af flerheden af udluftningskanaler er i det mindste delvist fyldt med et materiale (21), for eksempel et porøst materiale, til at styre de pågældende akustiske udbredelsesegenskaber for udluftningskanalen.

10. Høreanordning ifølge krav 9, hvor det porøse materiale er udskifteligt indsat i den i det mindste ene af flerheden af udluftningskanaler.

11. Høreanordning ifølge krav 9 eller 10, hvor den udvendige flade (171) af huset (17) af udgangsmodulet (15), i det mindste over en del af dens langsgående forlængelse, omfatter et lag af et passende fyldmateriale (21), for eksempel et porøst materiale.

12. Høreanordning ifølge et hvilket som helst af kravene 1-11, hvor udgangsmodulet består af en langsgående krop, såsom en cylindrisk krop eller en konisk krop.

13. Høreanordning ifølge et hvilket som helst af kravene 1-12, hvor lokale fremspring fra en flade, såsom fra den indvendige flade af formen eller fra den udvendige flade af udgangsmodulet eller fra begge, er indrettet til fuldstændigt eller delvist at fastgøre udgangsmodulet i åbningen af formen og samtidig tillade en vis ventilation.

DRAWINGS

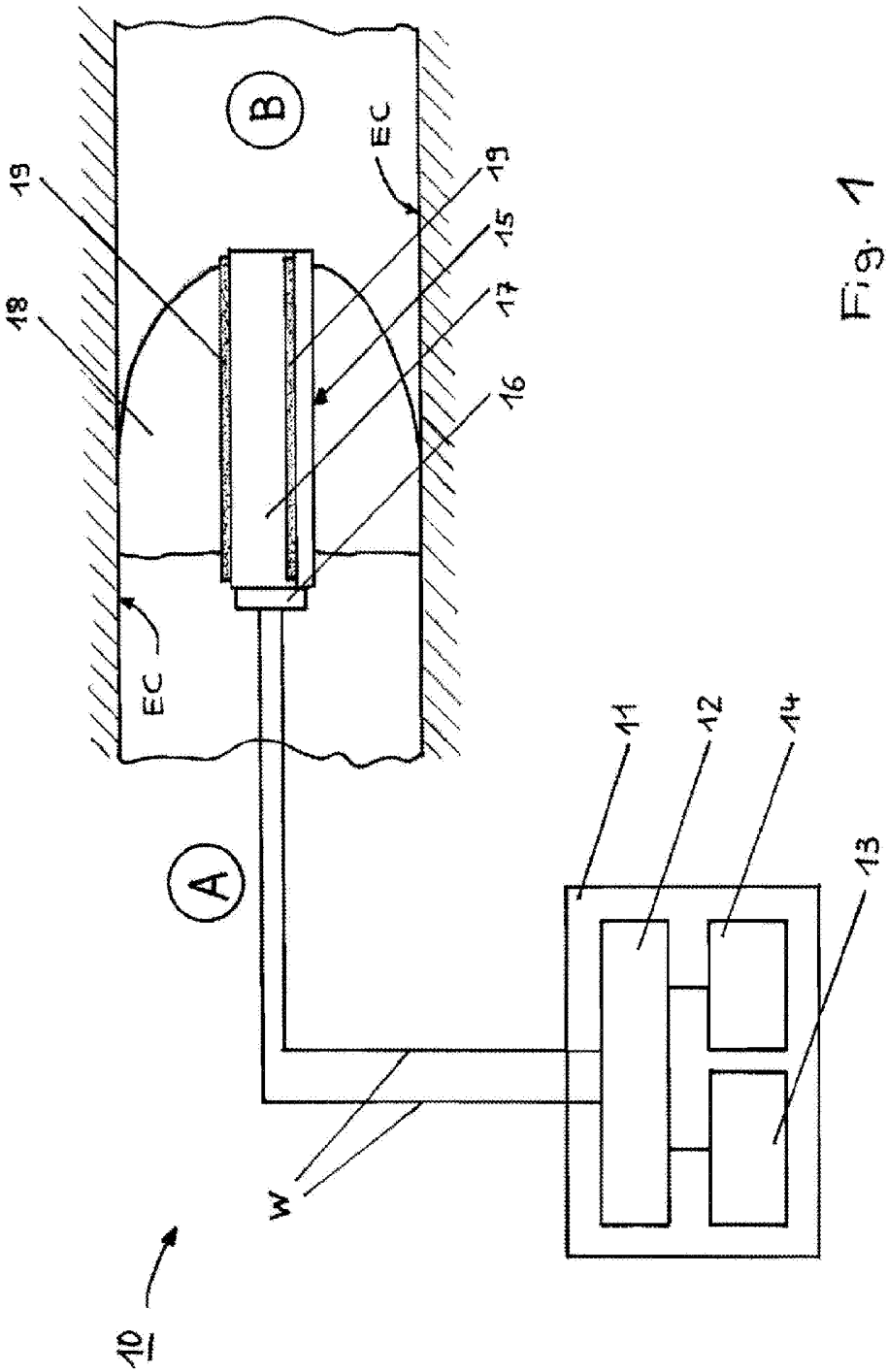

Fig. 1

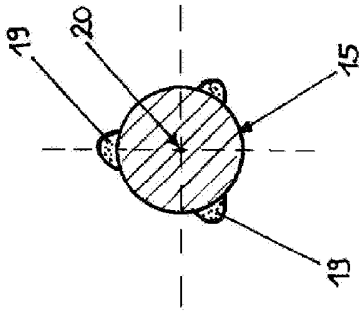

Fig. 2 B

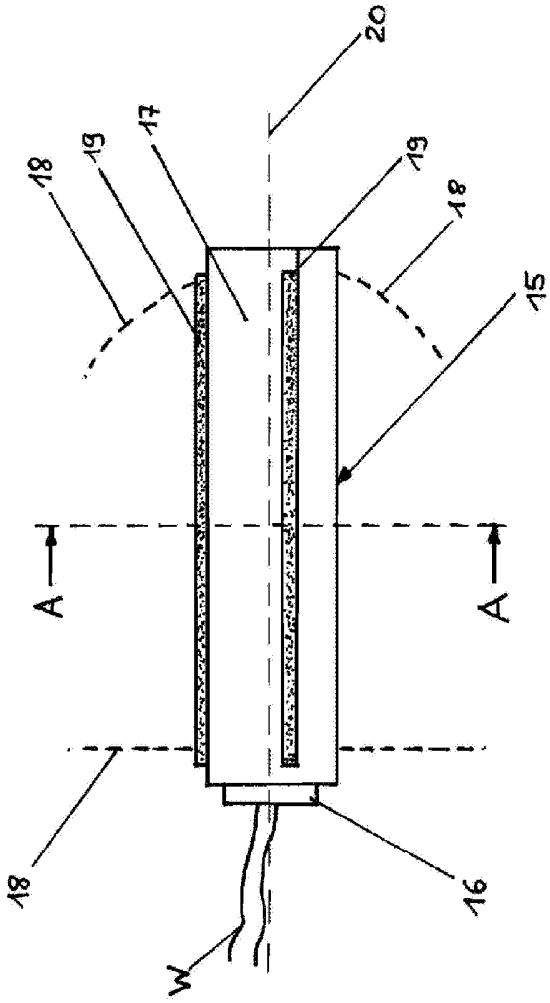

Fig. 2 A

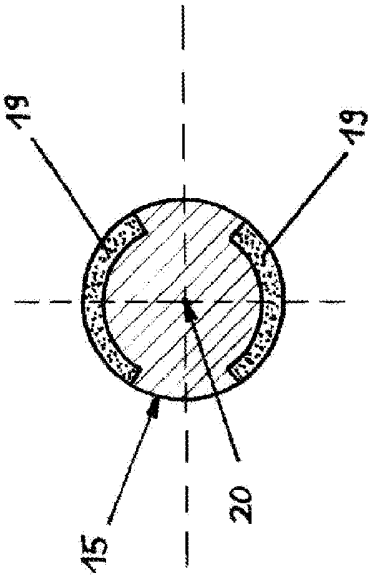

Fig. 3B

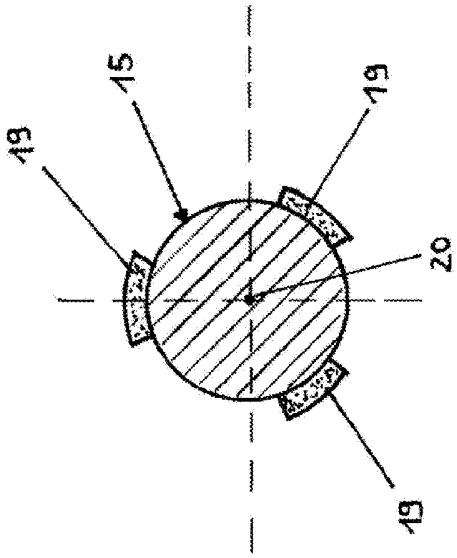

Fig. 3A

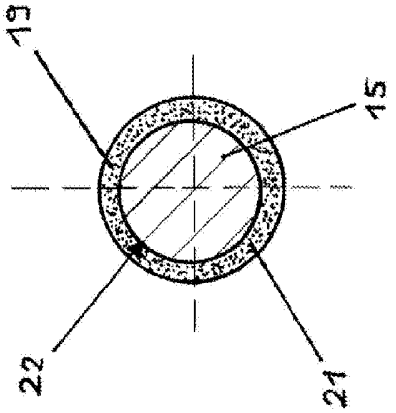

Fig. 4B

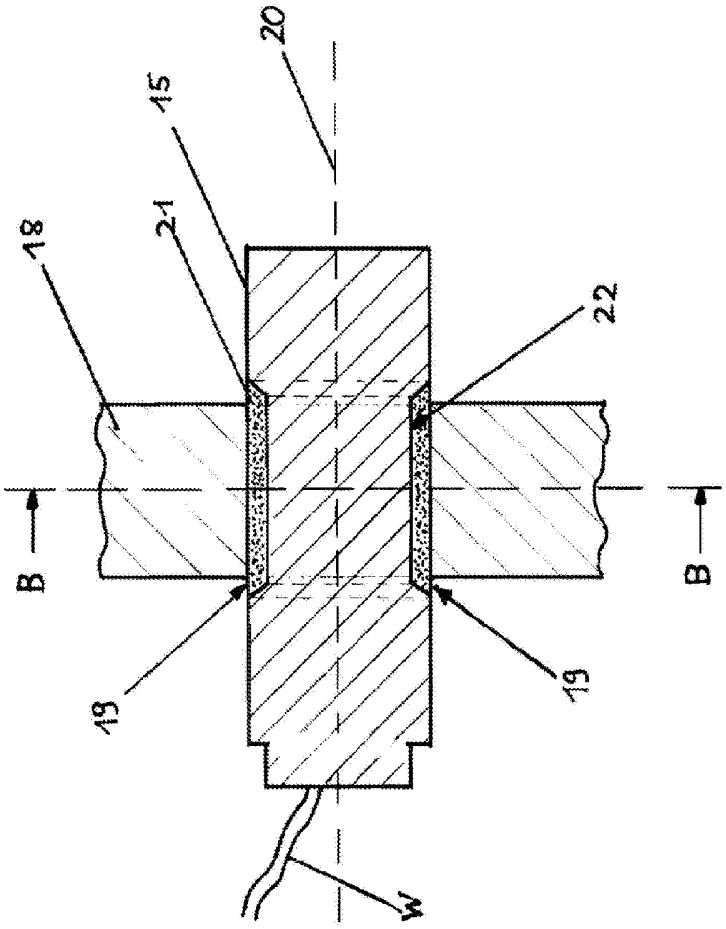

Fig. 4A

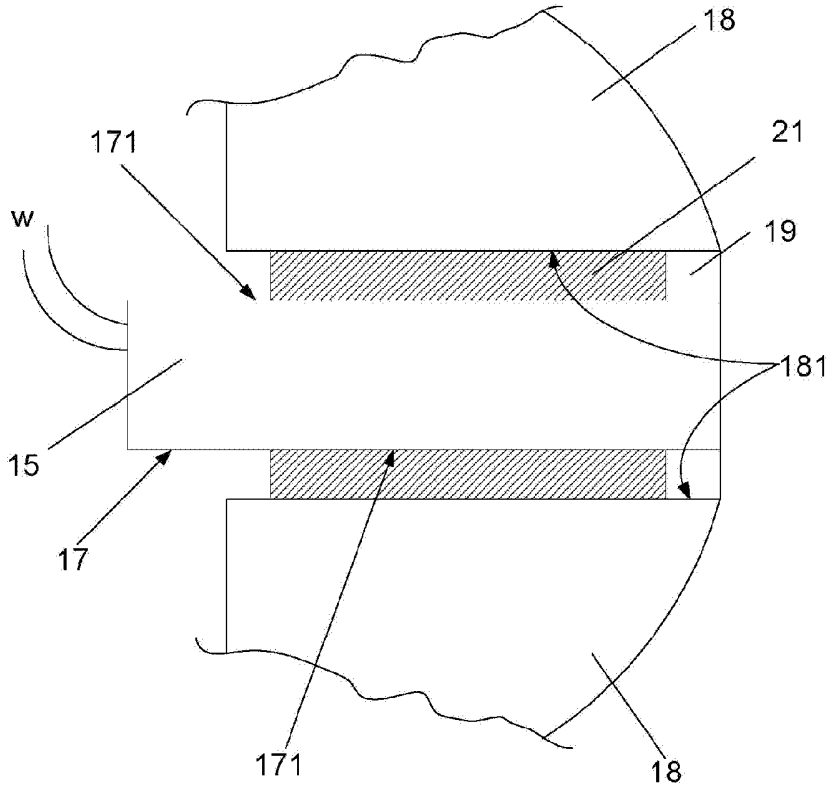

Fig. 5A

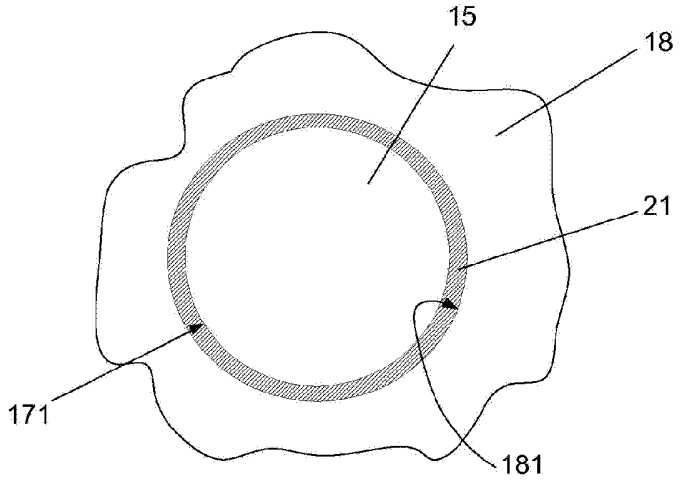

Fig. 5B

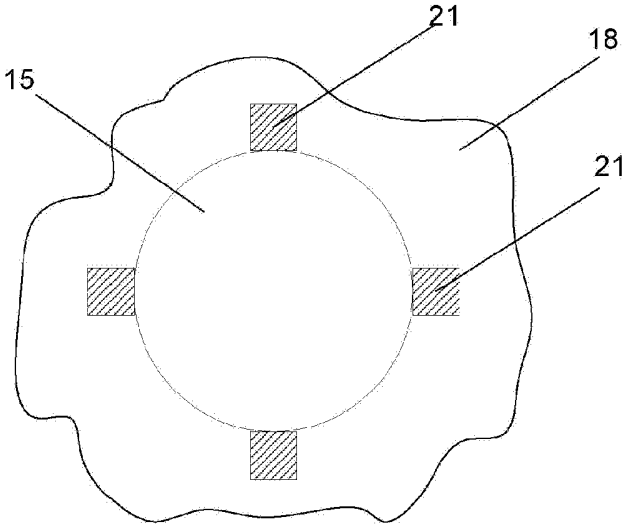

Fig. 5C

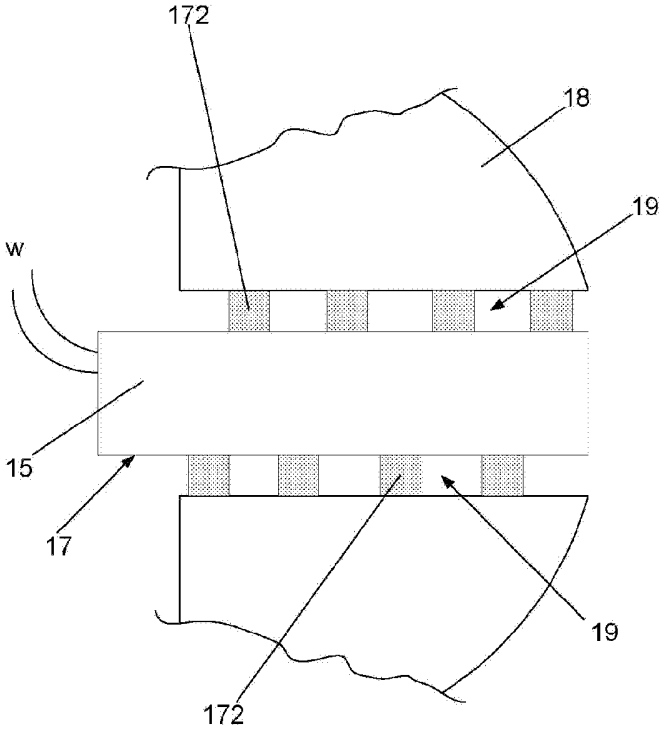

Fig. 6