2 Sheets--Sheet 1.

CARRIE W. CHAMBERLAIN.

Combined Cradle and Bedstead.

No. 164,639. Patented June 22, 1875.

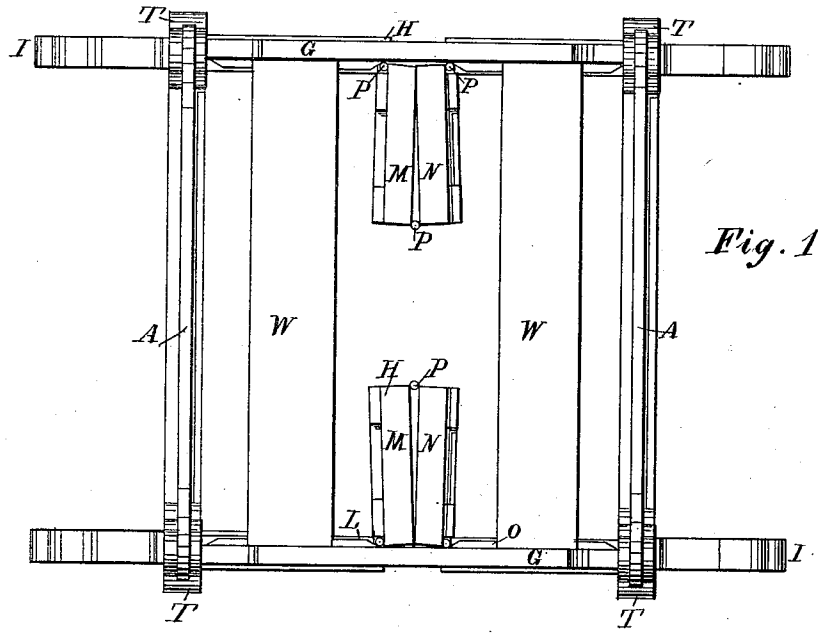

Fig. 1

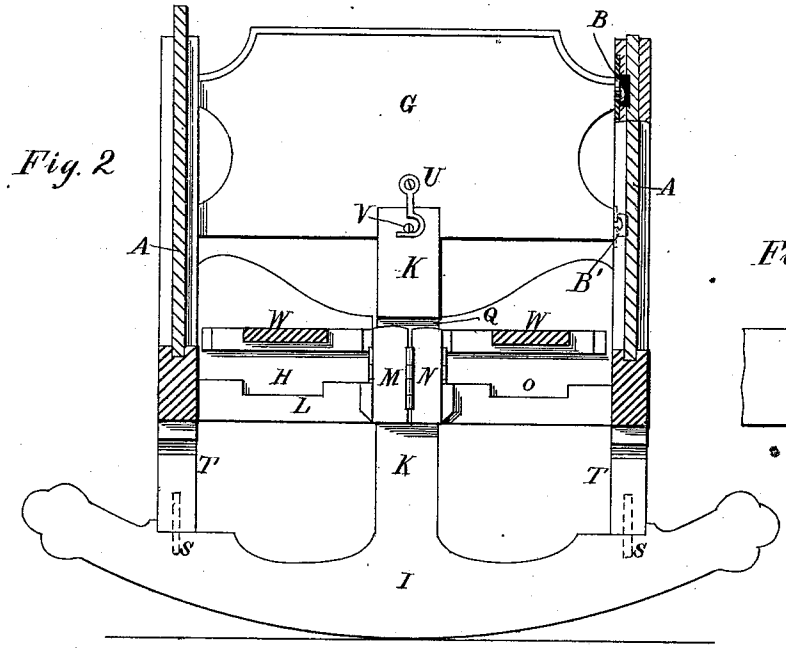

Fig. 2

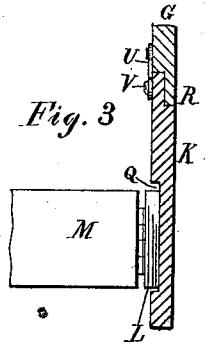

Fig. 3

Witnesses.

Thomas J. Godwin

S. S. Perley.

Inventor

Carrie Wells Chamberlain.

By Theodore Munger.

Attorney.

THE GRAPHIC CO. PHOTO-LITH. 39 & 41 PARK PLACE, N.Y.

2 Sheets--Sheet 2.

CARRIE W. CHAMBERLAIN.

Combined Cradle and Bedstead.

No. 164,639. Patented June 22, 1875.

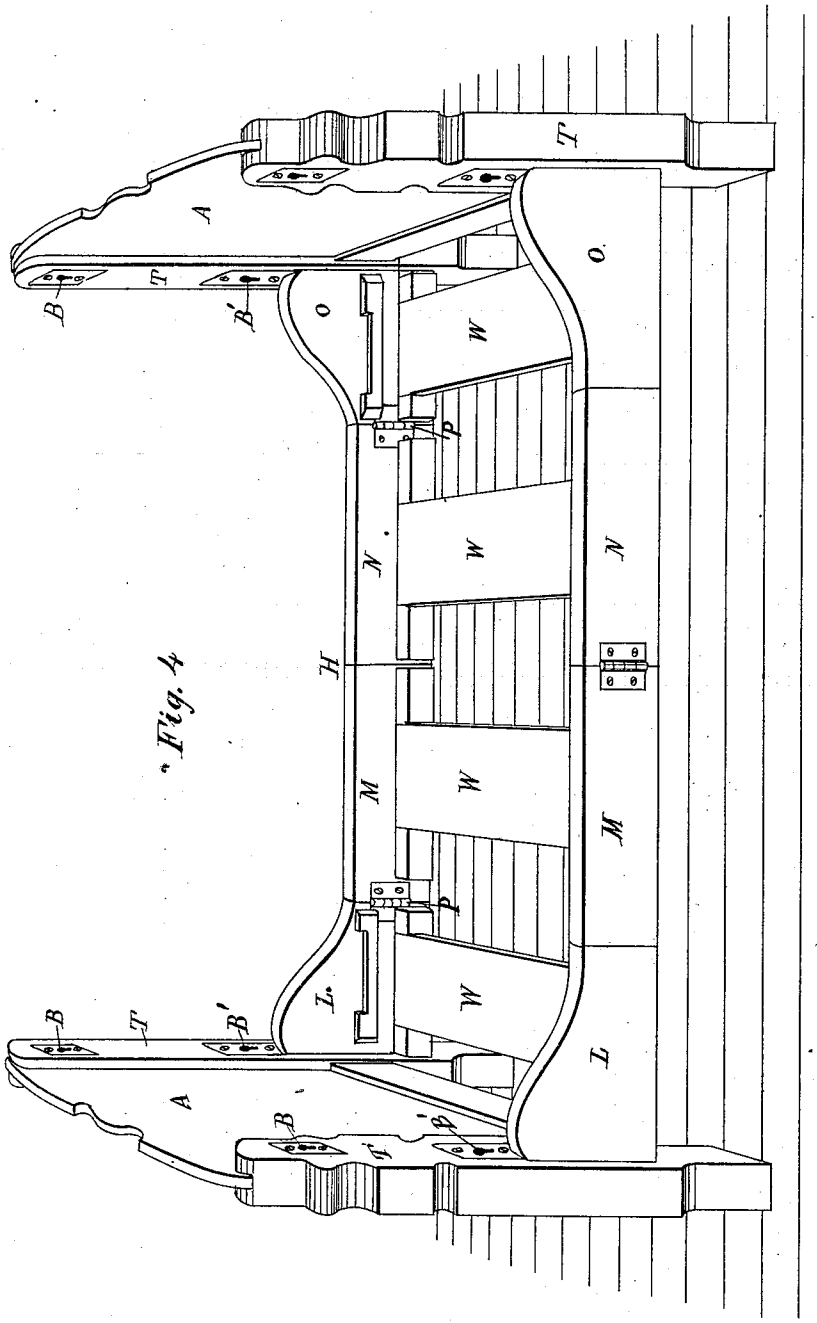

Fig. 4

Witnesses.

Thomas J. Godwin
F. L. Perley.

Inventor

Carrie Wells Chamberlain,
By Theodore Mungen,
Attorney.

THE GRAPHIC CO. PHOTO-LITH. 39 & 41 PARK PLACE, N.Y.

UNITED STATES PATENT OFFICE.

CARRIE W. CHAMBERLAIN, OF DENVER, COLORADO TERRITORY.

IMPROVEMENT IN COMBINED CRADLES AND BEDSTEADS.

Specification forming part of Letters Patent No. **164,639**, dated June 22, 1875; application filed May 14, 1875.

To all whom it may concern:

Be it known that I, CARRIE WELLS CHAMBERLAIN, of Denver, in the county of Arapahoe and Territory of Colorado, have invented a new and useful Improvement in a Combined Cradle and Bedstead; and I hereby declare the following to be a full, clear, and exact description of the same, reference being had to the accompanying drawing making a part of this specification, in which—

Figure 1 is a plan view of a combined cradle and bedstead embodying the improvements in this invention. Fig. 2 is a transverse vertical sectional view taken through the center of Fig. 1. Fig. 3 is a detached sectional view taken through the longitudinal vertical center of Fig. 2, and Fig. 4 is a perspective view of the invention extended and converted into a bedstead.

This invention relates to an improvement in a cradle and bedstead combined; and consists in the combination of the two side pieces provided with legs, two removable hinged end rails, two removable end pieces, and two removable anchor-shaped rockers; the object of the invention being to produce a combined cradle and bedstead, to be used as a cradle for an infant while it is quite small, and to be changed by the removal of the rockers and end pieces, and the extension of the hinged end rails, into a bedstead, to be occupied by the infant when it has grown too large for the cradle, all of which will hereinafter more fully appear.

In the accompanying drawing, the side pieces A A are provided with slotted plates B B′ in the posts T, for receiving the studs on the ends of the removable end pieces G G and the hinged end rails H H. The anchor-shaped rockers I I are so called because the uprights K K and rockers resemble an anchor. The end-rails H H are constructed in four sections, L, M, N, and O, connected together by hinges P, and when in use in the cradle are folded to form a letter, T, with a recess at the top of the vertical portion of the letter T, which receives one of the uprights K. A recess, Q, in the latter receives the top ends of the vertical portion of the letter T. The tops of the uprights K are tenoned and enter recesses R R in the lower inside edges of the end pieces G G. The rockers I I have pins S S, which enter holes in the lower ends of the posts T of the side pieces A A. A hook, U, upon each end piece G engages with a stud, V, upon each upright K, and secures the anchor-shaped rockers I I to the cradle. Slats W W′ traverse the cradle longitudinally.

The parts hereinbefore described, when put together, form an infant's cradle, which may be occupied by the infant until it has grown too large to occupy it longer. The rockers I I and end pieces G G may be then removed, and the hinged end rails H H extended to form the side rails of a bedstead, as shown in Fig. 4, and the slats W, all placed in the same plane, which change converts the cradle into a bedstead of greater dimensions than when the parts formed the cradle. It will be seen that the side pieces A A of the cradle become the head and foot of the bedstead. Casters may be inserted in the holes formerly occupied by the pins S S.

Having thus described my invention of improvements, what I claim as new and useful, and desire to secure by Letters Patent, is—

A combined cradle and bedstead, composed of the side pieces A A, end rails H H, end pieces G G, and anchor-shaped rockers I I, constructed to permit the removal of the end pieces G G and anchor-shaped rockers I I, and the extension of the hinged end rails H H, substantially as and for the purposes set forth.

In testimony that I claim the foregoing improvement as above described, I have hereunto set my hand and seal this 6th day of May, 1875.

CARRIE W. CHAMBERLAIN. [L. S.]

Witnesses:

FRANCIS GALLUP,

JOHN W. HORNER.