SPRUSON & FERGUSON

Australia

Patents Act 1990

648047

PATENT REQUEST: STANDARD PATENT

We, the Applicant/Nominated Person specified below, request we be granted a patent for the invention disclosed in the accompanying standard complete specification.

[70,71] Applicant/Nominated Person:

Surgical Dynamics, Inc. of 1240 South Loop Road, Alameda, California, United States of America

[54] Invention Title:

Surgical Method and Apparatus for Fusing Adjacent Bone Structures

[72] Inventor(s):

Charles D Ray, Eugene A Dickhudt

[74] Address for Service in Australia:

Spruson & Ferguson, Patent Attorneys
Level 33 St Martins Tower
31 Market Street
Sydney New South Wales Australia [Code SF]

Basic Convention Application Details

[31] Application No	[33] Country	[32] Date of Application
432088	US	6 November 1989

DATED 27 January, 1994

Registered Patent Attorney

IRN: 167678

INSTR CODE: 54285

AUSTRALIA PATENT OFFICE

[N:\LIBT]02629:LMM

SPRUSON & FERGUSON

Australia

Patents Act 1990

NOTICE OF ENTITLEMENT

I, Henry Klyce, of Surgical Dynamics, Inc. of, 1240 South Loop Road, Alameda, California 94501, U.S.A.

being authorised by the Applicant/Nominated Person in respect of an application entitled:

Surgical Method and Apparatus for Fusing Adjacent Bone Structures

state the following:-

The Applicant/Nominated Person has entitlement from the actual inventor(s) as follows:-

The Applicant/Nominated Person is the assignee of the actual inventor(s).

The Applicant/Nominated Person is entitled to rely on the application~~(s)~~ listed in the Declaration under Article 8 of the PCT as follows:

The Applicant/Nominated Person is the assignee of the basic applicant(s).

The basic application~~(s)~~ listed on the Declaration under Article 8 of the PCT is~~/are~~ the application~~(s)~~ first made in a Convention country in respect of the invention.

DATED this 13th day of July 1992

.....
(Signature)

.....
(Name & Title)
Henry Klyce
President

IRN: 167678

INSTR CODE: 54285

LHP:1797U

AU9065347

(12) PATENT ABRIDGMENT (11) Document No. AU-B-65347/90
(19) AUSTRALIAN PATENT OFFICE (10) Acceptance No. 648047

(54) Title
SURGICAL METHOD AND APPARATUS FOR FUSING ADJACENT BONE STRUCTURES

International Patent Classification(s)
(51)[5] **A61B 017/58** **A61B 017/56**

(21) Application No. : **65347/90** (22) Application Date : **18.09.90**

(87) PCT Publication Number : **WO91/06261**

(30) Priority Data

(31) Number	(32) Date	(33) Country
432088	**06.11.89**	**US UNITED STATES OF AMERICA**

(43) Publication Date : **31.05.91**

(44) Publication Date of Accepted Application : **14.04.94**

(71) Applicant(s)
SURGICAL DYNAMICS, INC.

(72) Inventor(s)
CHARLES D RAY; EUGENE A. DICKHUDT

(70) Nominated Person(s)
SURGICAL DYNAMICS, INC.

(74) Attorney or Agent
SPRUSON & FERGUSON , GPO Box 3898, SYDNEY NSW 2001

(57) Claim

1. A fusion cage for promoting fusion with one or more bone structures when a bone-growth inducing substance is packed into the fusion cage, comprising:

projection means for projecting into the bone structure to mate the fusion cage to the bone structure, the projection means defining a plurality of recesses which become filled with the bone structure on implantation;

an internal cavity into which the bone-growth inducing substance can be packed, the internal cavity extending via perforations into at least some of the recesses defined by said projection means; and

means for defining a land which at least partially blocks the recesses to prevent growth of disc tissue into the cage, wherein the means for defining a land becomes positioned in the disc space between the two vertebral bodies to prevent disc tissue growing into the fusion cage.

OPI DATE 31/05/91 APPLN. ID 65347 / 90

PCT AOJP DATE 11/07/91 PCT NUMBER PCT/US90/05318

INTERNATIONAL APPLICATION PUBLISHED UNDER THE PATENT COOPERATION TREATY (PCT)

(51) International Patent Classification 5 : A61F 2/44

A1

(11) International Publication Number: WO 91/06261

(43) International Publication Date: 16 May 1991 (16.05.91)

(21) International Application Number: PCT/US90/05318

(22) International Filing Date: 18 September 1990 (18.09.90)

(30) Priority data:
432,088 6 November 1989 (06.11.89) US

(71) Applicant: SURGICAL DYNAMICS, INC. [US/US]; 1240 South Loop Road, Alameda, CA 94501 (US).

(72) Inventors: RAY, Charles, D. ; 19550 Cedarhurst, Wayzata, MN 55391 (US). DICKHUDT, Eugene, A. ; 801 Contintental, New Brighton, MN 55112 (US).

(74) Agent: MEYER, Sheldon, R.; Fliesler, Dubb, Meyer & Lovejoy, Four Embarcadero Center, Suite 400, San Francisco, CA 94111-4156 (US).

(81) Designated States: AT (European patent), AU, BE (European patent), CA, CH (European patent), DE (European patent)*, DK (European patent), ES (European patent), FI, FR (European patent), GB (European patent), IT (European patent), JP, KR, LU (European patent), NL (European patent), NO, SE (European patent).

Published
With international search report.
Before the expiration of the time limit for amending the claims and to be republished in the event of the receipt of amendments.

648047

(54) Title: SURGICAL METHOD AND APPARATUS FOR FUSING ADJACENT BONE STRUCTURES

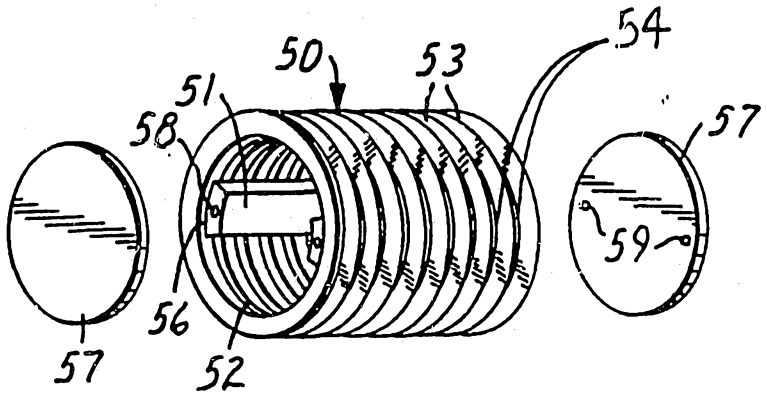

(57) Abstract

A fusion cage (10) having an external thread (12) can be surgically inserted into a threaded bore extending laterally between the adjacent bony structures such as two vertebrae (94, 95) with the thread (12) penetrating into cancellous bone of each of the vertebrae (94, 95). The fusion cage (10) is easily screwed into place by hand without damage to the bony structures (94, 95). Cage (10) is then packed with a bone-growth-inducing substance such as cancellous bone. When a pair of such cages (10) are implanted between adjacent vertebrae (94, 95), patients have been able to sit without pain by the second or third day, much earlier than has been possible in prior spinal fusions except those involving steel plates and screws. Eventually, the ingrowth of bone through perforations (13) in the valley (14) of the thread (12) of the fusion cage (10) forms a permanent interconnection between the two bony structures (94, 95).

* See back of page

SURGICAL METHOD AND APPARATUS FOR FUSING ADJACENT BONE STRUCTURES

~~CROSS REFERENCE TO RELATED APPLICATION~~

This is a division and ~~continuation~~-in-part of our ~~copending~~ application S.N. 07/259,031, filed ~~October 17, 1988.~~

BACKGROUND OF THE INVENTION

Field of the Invention

The invention concerns method and apparatus for fusing two adjacent bony structures such as a bone joint, especially adjacent vertebrae of the spine.

Description of Related Art

Subsequent to injury, diseases or other degenerative disorder, the disc, a ligamentous cushion between vertebrae, may undergo a painful deterioration. The disc shrinks and flattens out, and the distance between the vertebral bodies begins to collapse. Subsequently, there may be a progressive degeneration leading to mechanical instability, where painful translocations occur between adjacent vertebrae. The movement-induced pain may be so disabling that in many such cases, the vertebral motion must be eliminated. Thus, rigid fusions may be the only present means to stop the translocations and relieve the pain.

It is generally held that successful fusions demand a contiguous growth of bone to create a solid mass that will unite the movable elements into one unit. Otherwise, the fusion cannot achieve the tasks

AUSTRALIA PATENT OFFICE

of pain reduction, maintenance of intervertebral height, and immobility of the vertebrae. When fusion bone is first placed, it is soft and moveable, having no cohesive strength. Therefore a variety of appliances have been developed that attempt to hold the vertebrae quite still under conditions of normal spinal activity and daily stress. Bone graft material is placed between the vertebrae, the outer or cortical surfaces of which have been removed or deeply scarified so as to promote the ingrowth of the graft into these recipient sites. Thus positioned, the bone graft slowly unites the vertebrae. Such an appliance is not meant to permanently secure immobility of the segments. Bone ingrowth is required for this.

Dependency upon such an appliance as the sole stabilizer is ultimately unsuccessful due to the development of a mechanical gap or transition between the bone and the appliance, leading to structural failure of the bone and adjacent connective tissue. Such failure is seen in fractures, erosion and absorption of bone with potential further collapse. The pain may also become progressively disabling.

Approximately 150,000 lumbar spinal fusions were performed in the USA during 1987, as reported by the American Hospital Association. There are may methods for intervertebral fusion. The most successful have achieved a success rate of about 90% in random cases. However, several of these techniques, especially those requiring complex appliances, are difficult to master and are hazardous to nerve and vessel structures normally lying close to the involved bones.

From a biomechanical point of view, the most important location of a spinal fusion is at the mechanical center of rotation between the vertebrae. This point is centered within the disc space. Therefore, an interbody fusion is the most rigid and thus the most sought after method among surgeons. Current methods of interbody fusions are, however, the most hazardous of all spinal fusion methods.

Both anterior (transabdominal) and posterior surgical approaches are used for interbody fusions. Typically, a plug, dowel or segment of bone is driven tightly into a cavity carved inside the interbody, intradiscal space. Since there must be a bone-to-bone bridge created during the fusion process, connective tissue and discal tissue must be removed. Deep cuts within the bone must penetrate into the softer, cancellous region to promote bone growth across the space.

Intervertebral fusions using circular bone grafts have been reported in the orthopedic and neurosurgical literature for some years. B.R. Wiltberger in a paper published in Clinical Orthopedics, Vol 35, pp 69-79, 1964, reviewed various methods of intervertebral body fusion using posterior bone dowels driven firmly into a suitably smaller hole between the adjacent vertebrae. Upon doing so the dowel can split or crack or collapse. The stretched bone might also split and it can be compressed by the dowel to the point that it will not grow normally due to collapse of formerly open pores or vascular channels. If this occurs, there may be a late absorption of surrounding bone and the dowel might

loosen, with a renewed danger of expulsion. See also a 2-page brochure from Neurological Survey Associates of Cincinnati, Inc. entitled "Posterior Lumbar Interbody Fusion Made Simple" which shows, after the bone dowel placement, the "(a)pplication of 5 mm dacron suture around spinous processes."

U.S. Patent 4,501,269 (Bagby) describes a surgical procedure for stabilizing the cervical spine of a horse and says that the procedure:

> "is applicable to any human or animal joint formed by opposed contiguous bony surfaces which are covered and separated by intervening cartilage and are surrounded by ligaments which resist expansion of the joint. Specific examples of such joints are a spinal joint between adjacent vertebrae or the ankle joint. The process was developed to immediately stabilize the joint and to further promote ultimate bone-to-bone fusion.... The implanted structure is in the form of a perforated cylindrical bone basket which can be filled with bone fragments produced during the preparation of the joint. These bone fragments provide autogenous tissue to promote bone growth through the basket, as well as around it.
>
> "The process involves the initial steps of surgically accessing the joint and removing intervening cartilage located between the contiguous bony surfaces. A transverse cylindrical opening is then bored across the contiguous bony surfaces. Immediate stabilization is achieved by driving into the cylindrical opening a hollow basket having a rigid perforated

cylindrical wall whose outside diameter is slightly greater than the inside diameter of the cylindrical opening. The implanting of the basket spreads the bony surfaces apart in opposition to the resistance to expansion of the joint provided by the surrounding ligaments" (col. 2, lines 26-55).

U.S. Pat. No. 2,537,070 (Longfellow) shows in Fig. 2 a "reinforce 7" that is much like Bagby's fusion basket.

Vich, J. Neurosurg., Vol 63, pp 750-753 (1983) describes a means for cervical spine fusion, using an anterior approach, by surgically implanting a cylindrical bone graft.

"Screw threads are placed in the graft with a small, previously sterilized die. The grooves of the thread can be made as deep as required. The vertical cervical bodies are prepared according to Cloward's technique. After a cylindrical bed has been drilled in the appropriate intervertebral bodies, the graft is screwed into place with instruments especially developed for this purpose" (p. 750).

Vich's Fig. 2 legend points out that a threaded graft dowel has a larger contact surface than a plain dowel and a greater resistance to pressure and sliding. Vich also says:

"When grafts with a diameter of 14 mm were used, we sometimes threaded the receiving bed with a die-stock of 13 mm to facilitate the insertion" (p. 751).

An additional desirable effect of an intervertebral fusion is the restoration or maintenance of a normal intervertebral spacing. Spreading devices are generally required in order to restore all or a part of the normal intradiscal height, in the process of placing the fusion material or appliance. When the procedure is performed using the commonly employed posterior approach, a variety of spreaders may be placed between various posterior bony elements normally attached to the vertebrae, such as, dorsal spinous processes or laminas. Using such spreaders, a forward tilt or wedging of the discal space occurs, with the posterior aspect of the space becoming more open than the anterior. When a bone graft of any shape is driven into a cavity that is wedged more open posteriorly between two opposing movable vertebrae, there is a strong propensity for the graft to be retropulsed during the postoperative recovery period as a result of to and fro movement between the opposing vertebrae. Thus, to aid in the prevention of graft expulsion, it would be desirable to have the cavity either maintain parallelism or be slightly narrower at its most posterior portion. Ventral to this cavity, the stout ligamentous disc annulus remains and prevents ventral migration of the graft into the retroperitoneal space. Further, there is value in restoring the original spinal lordotic curve as the fusion grows; this requires that the cavity and the interbody fusion element be placed to promote a normal spinal anatomical position, that is, without wedging of the space in either direction.

In U.S Pat. No. 4,743,256 (Brantigan) pairs of plugs are implanted as struts spanning and maintaining the disc space between adjacent vertebrae. While bone plugs were previously used in the same way, Brantigan employs "rigid plugs of structural material having porous surfaces to facilitate ingrowth of bone tissue" (col. 2, lines 66-68), inserting these into "grooves bridging the cancellous bone of one vertebral body to the

AUSTRALIA PATENT OFFICE MB
IG:\WPUSER\LIBMM\00028:LMM

cancellous bone of the subjacent vertebral body ..." (col. 2, lines 1-6). "The plugs are preferably made of an inert metal substrate such as stainless steel ... having a porous coating of metal particles ..." (col. 3, lines 8-14). The plug of Fig. 12 "has bone piercing tangs or points 31" (col. 5, line 61).

AUSTRALIA PATENT OFFICE

IG:\WPUSER\LIBMM\00029:LMM

Summary of the Invention

The present invention provides a fusion cage for promoting fusion with one or more bone structures when a bone-growth inducing substance is packed into the fusion cage, comprising:

AUSTRALIA PATENT OFFICE

projection means for projecting into the bone structure to mate the fusion cage to the bone structure, the projection means defining a plurality of recesses which become filled with the bone structure on implantation;

an internal cavity into which the bone-growth inducing substance can be packed, the internal cavity extending via perforations into at least some of the recesses defined by said projection means; and

AUSTRALIA PATENT OFFICE
MB
[G:\WPUSER\LIBMM]00029:LMM

means for defining a land which at least partially blocks the recesses to prevent growth of disc tissue into the cage, wherein the means for defining a land becomes positioned in the disc space between the two vertebral bodies to prevent disc tissue growing into the fusion cage.

The Drawings

In the drawing, all figures of which are schematic,

Fig. 1 is an exploded isometric view of a first V-thread fusion cage and two perforated end caps;

AUSTRALIA PATENT OFFICE MB

Fig. 2 is an isometric view illustrating the formation of a body that can be cut to form a series of second V-thread fusion cages;

Fig. 3 is an isometric view of a first tapping instrument (partly cut away to reveal details of construction) for forming female threads in bores into which male-thread fusion cage is to be inserted;

AUSTRALIA PATENT OFFICE

IG:\WPUSER\LIBMM\00029:LMM

Fig. 4 is an isometric view of a wrench for screwing a male-thread fusion cage into a threaded bore;

Fig. 5 is an exploded isometric view of a third male-thread fusion cage;

Fig. 6 is a plan view of a pilot drill that can be used in preparation for forming a threaded bore laterally between two vertebrae into which a male-thread fusion cage can be surgically implanted;

AUSTRALIA PATENT OFFICE

Fig. 7 is a plan view of a pilot rod that also can be used in preparation for forming said threaded bore;

Fig. 8 is a plan view of a hollow lamina drill that can be used in conjunction with the pilot rod of Fig. 7;

Fig. 9 is an isometric view showing the use of a C-retractor in preparation for the surgical implantation of a pair of male-thread fusion cages between two vertebrae;

AUSTRALIA PATENT OFFICE
[G:\WPUSER\LIBMM]00029:LMM

Fig. 10 is a plan view of a hollow vertebral drill that also can be used with the pilot rod of Fig. 7; and

Fig. 11 is a plan view of a second tapping instrument that can be used in conjunction with the C-retractor of Fig. 9 to tap a female thread in the bore formed by the hollow vertebral drill of Fig. 10.

DETAILED DESCRIPTION OF THE PREFERRED EMBODIMENT

The fusion cage 10 of Fig. 1 was formed from a solid steel cylinder by drilling eight small, equally space holes 11 in the axial direction, each hold being centered on a circle concentric with the axis of the cylinder. Then a large hole was drilled centered on the axis and having a radius substantially identical to that of the aforementioned circle. A V-thread 12 was then machined in the external surface of the cylinder, thus opening through that surface a perforation 13 extending through the rounded valley 14 of the V-thread at each crossing of the valley and one of the small holes 11. A screw thread 15 was then machined in the internal surface of the fusion cage to threadably receive an end cap 16 that has apertures 18 similar to those of a salt shaker. Snap-on end caps would also be useful.

In making a fusion cage by the technique described in the preceding paragraph, the small holes 11 could be enlarged to intersect each other, thus making it unnecessary to drill a central hole. Enlarged small holes would result in larger perforations 13.

Referring to Fig. 2, a series of fusion cages can be made from a plurality of rods 22 of rectangular cross-section that can be continuously extruded and fed into each of eight keyways 23 in the surface of a mandrel 24. Simultaneously, a rod 26 of triangular cross-section is extruded, wrapped helically around the rectangular rods 22, and soldered or welded to each of the rectangular rods 22 at every crossing to provide an external V-thread. Upon emerging from the keyways, the resulting body is cut into individual fusion cages each of which has perforation 28 between adjacent turns of the V-thread-forming rod 26 wherever it bridges a gap between adjacent rectangular rods 22.

A fusion cage identical to that of Fig. 2 can be made from a hollow cylinder by machining an external V-thread and broaching a plurality of rectangular internal keyways.

Each of the fusion cages in Figs. 1 and 2 could be made from a model by the lost wax process.

The tapping instrument 30 of Fig. 3 has a hollow cylindrical shaft 31 with a T-handle 32 at one end and an external thread 33 at the other end. Slidably received within the hollow shaft is a pilot rod 34, one end 35 of which protrudes beyond the hollow shaft 31 and slidably fits into a bore that has been drilled into the recipient bone. At the other end of the pilot rod is a knurled cap 35A. Projecting from the threaded end of the hollow shaft 31 are cutting teeth 36 that enlarge the bore to the minor diameter of the external thread 33 of the hollow shaft 31. The threaded end of the hollow shaft also is formed with three symmetrical scallops 37 (one shown)

to expose a cutting edge 38 at the leading edge of the external thread 33, which cutting edge forms female bone threads.

Detritus created by tapping instrument 30 is deposited through the scallops 37 into a reservoir provided by a central recess 39 in the pilot rod 34. The end 35 of the pilot rod which extends from the recess 39 into the bore has external threads which, when the threaded pilot rod 34 is turned, carry detritus upwardly to be deposited through the scallops into the reservoir.

Upon rotating the hollow shaft 31 to form female bone threads in the bore, the surgeon can feel increased back pressure when the reservoir becomes full and should grasp the knurled cap 35A to remove and clean out the pilot rod. If the gummy nature of the detritus were to prevent the pilot rod from being easily pulled out of the hollow shaft, the knurled cap 35A could be removed to permit the hollow shaft 31 to be unscrewed from the threaded bore, leaving the pilot rod in place. The pilot rod then serves as a guide if the bore has not yet been completely tapped and it is necessary to reinsert the hollow shaft to compete the tapping.

The wrench 40 of Fig. 4 has a cylindrical shaft 41 with a T-handle 42 at one end and an octagonal protuberance 44 at the other end. The corners of the protuberance 44 fit into recesses in the fusion cage to permit the fusion cage to be rotated by rotating the wrench. A spring-loaded ball 46 frictionally holds the protuberance in place when it is inserted into the fusion cage.

Fig. 5 shows a third male-thread fusion cage 50 that has formed from a solid steel cylinder by drilling an axial bore 51 and then broaching out a pair of cylindrical channels 52 that extend to a diameter only a little smaller than the external surface of said cylinder. A V-thread 53 has then been machined in that external surface, thus creating perforations 54 in the valley between adjacent turns of the thread, each perforation extending completely across one of the channels 52. Each end of each land between the channels has been machined to have a recess 56 to enable an end cap 57 to fit flush with the end of the fusion cage. At each recess 56, each land has been formed with a small bore 58 into which one of a pair of projections 59 from the end cap 57 fits snugly to hold the end cap in place.

In Fig. 6, a pilot drill 60 has a T-handle 62 at one end of a shaft 63 and at the other end a collar 64 holding a bit 66. A set screw 68 in the collar permits the protruding length of the bit to be adjusted, and the larger diameter of the collar acts as a stop. Typically, the bit 66 extends 25 mm beyond the collar 64.

In Fig. 7, a pilot rod 70 has a cylindrical shaft 71, at one end of which is a cylindrical boss 72 that is 30 mm in length and slidably fits into a bore formed by the pilot drill 110 of Fig. 11. The boss 72 has two scribe marks 73 that indicate the depth in cm of the bore. At its other end, the shaft 71 is formed with a flat 75 that has scribe marks 76 marked to indicate 0, 1, 2 and 3 cm for purposes explained below.

Shown in Fig. 8 is a hollow lamina drill 80 which has a cutting edge 82 and a central bore 83 that slidably fits over the shaft 71 of the pilot rod 70. An anodized aluminum handle 84 permits a surgeon to drive the lamina drill by hand.

Shown in Fig. 9 is a C-retractor 90 which has a cylindrical sleeve 91 that is formed with an opening 92 across about one-fourth of its circumference over its full length. Extending from one end of the sleeve opposite to said opening 92 is a malleable handle 93 by which the cylindrical sleeve 91 can be fitted through the arcuate laminotomy (formed by the lamina drill 80) down to the vertebrae 94 and 95. At the other end of the sleeve 91 are four spikes 96 in two pairs, one pair on either side of a line that is 180° from the center of said opening 92. When the sleeve of the C-retractor 90 is concentric with a pilot bore that has been drilled laterally into the disc 97 between the two vertebrae 94 and 95, one pair of the spikes can be set into the dorsal surfaces of each vertebra after careful orientation to be concentric with the pilot rod 70 while it is seated in the pilot bore. As also shown in Fig. 9, one purpose of the sleeve 91 of the C-retractor 90 is to keep tools from contacting the dura 98 and the spinal nerve 99.

Shown in Fig. 10 is a hollow vertebral drill 100, the shaft 101 of which is formed with a central bore (not shown) that slidably fits over the shaft 71 of the pilot rod 70 while the C-retractor 90 is in place. At one end of the hollow drill are scalloped cutting edges 105, and at the other is a hard rubber handle 103 that permits a surgeon to drive the

vertebral drill by hand. Scribe marks 107 indicate 0, 1, 2 and 3 cm. The 0 mark is at the top of the cylindrical sleeve 91 of the C-retractor when the vertebral drill is first put into place, and it and the other marks sequentially disappear behind the cylindrical sleeve as the vertebral drilling progresses. At the same time the scribe marks 76 on the flat 75 of the shaft 71 of the pilot rod 70, appear behind the handle 103 of the vertebral drill. While the surgeon watches the disappearance of the scribe marks 107 on the vertebral drill, a surgical assistant holds the pilot rod at the proper attitude and monitors the progress of the drilling by watching the appearance of the scribe marks 76 on the pilot rod. The greater inside diameter of the C-retractor 90 compared to that of the scalloped cutting edges 105 affords to the surgeon the opportunity to make slight lateral corrections as the drilling progresses.

Shown in Fig. 11 is a second tapping instrument 110, the tap 112 of which slidably fits into the cylindrical sleeve 91 of the C-retractor 90. At the other end of its shaft 113 is a T-handle 114 by which a surgeon drives the tap until it reaches the depth of the bore.

Implanting the Fusion Cage of Fig. 1

In order to implant the fusion cage 10 between adjacent vertebrae, soft, collagenous disc material is first removed from the intervertebral space. A small window is created in the overlying laminas of each side, namely standard laminotomies. The neural tissues, dural sac and nerves, are

retracted medially. The intervertebral space is cleaned of disc material in a standard surgical fashion. If the disc space has narrowed as a result of degeneration, a scissors-jack type vertebral spreader or a hydraulically inflated bladder is inserted on one (the first) side inside the disc space and opened until the space approximates the normal. This may be confirmed by a lateral x-ray. The height of the disc space is measured on the x-ray so that the proper sizes of drills, tap, and fusion cage may be chosen.

The opposite (second) side of the same disc space is then addressed. The nerve tissues on the first side are relaxed and then retracted medialward on the second side. A pilot drill (e.g., 5 mm or 6 mm diameter depending upon discal space height) cuts a small channel in the face of each of the vertebrae, penetrating the interdiscal space to a depth of about 25 mm (the normal disc space is about 30 mm deep and 50 mm wide). A drill stop may be applied to the drill to prevent overboring the hole. A solid rod pilot is then inserted into the pilot hole and a pilot cutter (7 mm or 10 mm) is passed over it and brought downward to enlarge the pilot channels to slidably receive the pilot rod 35 of the tapping instrument 30 of Fig. 3. The cutting thread 33 (12 mm or 16 mm major diameter) cuts female bone threads through the opposing vertebral end plates and into both cancellous regions that will invite the ingrowth of new bone.

A V-thread fusion cage of the invention with one end cap in place, is snapped onto the wrench 40 of Fig. 4 by which it is screwed by hand into the

threaded intradiscal bore to its full depth. After removing the wrench, the cage is packed with bone chips or other bone-inducing substance, and the second end cap is applied to hold the bone chips securely in place.

After removing the vertebral spreader, the dura and nerves on the second side are relaxed and attention is once again directed to the first side which is drilled and tapped to receive a second fusion cage by the same procedure.

Over a period of several weeks, the bone from the vertebral bodies will grow through the perforations in the fusion cages and unite with the bone-inducing substance inside them, creating a solid fusion.

It is believed that the novel fusion cages will primarily be implanted by a posterior approach to the spine, although an anterior approach may be utilized, especially when applied to the vertical spine.

Example 1

The fusion cage of Fig. 1 has been machined from a cylinder of surgically implantable stainless steel to have the following dimensions:

diameter of starting cylinder	16 mm
length of cylinder	25 mm
diameter of each small hole 11	3 mm
diameter of circle on which holes 11 are centered	11.5 mm
diameter of central hole	11 mm
pitch of V-thread 12	2.5 mm/turn

angle at crown of thread 12	60°
fillet radius in valley of thread 12	0.4 mm
axial width of perforation 13	1.6 mm
circumferential breadth of perfs. 13	2.8 mm
when projected onto interior of a cylinder, % of area perforated	25%

Example 2

The fusion cage of Fig. 1 has been machined from a stainless-steel cylinder to have the same dimensions as that of Example 1 except that the diameter of the circle on which holes 11 were centered was increased to 12 mm. This results in 70% perforation in each of the areas of the top and bottom quadrants.

To test the compressive strength, a pine block was drilled to the outside diameter of the thread of the fusion cage, and a 1/4-inch section was cut away to leave two pieces, between which the fusion cage was placed with its perforations facing two pieces. A force of 808 pounds was applied before the fusion cage began to deform into an oval shape, thus indicating that it has much more than adequate compressive strength to withstand any forces to which it might be put when implanted between a person's vertebrae.

Example 3

A fusion cage, identical to that of Example 2 except that the cage was made from titanium, was tested in the same way for compressive strength. It resisted 850 pounds before beginning to deform.

Surgical Experience

The fusion cage of Example 2 has been surgically implanted in pairs between adjacent vertebrae of each of three persons. In each case after placement of the first cage, there was an impressive, instant stabilization of the previously unstable vertebral segment. Upon threading the second cage into its tapped hole, the segment became completely immobile.

Each of those three patients was able to tolerate sitting without low back pain by the second or third post-surgical day. This unexpectedly early comfort expressed by each of these three patients signified good, immediate stability to the previously painfully unstable spinal segment.

The first patient, on a routine visit at two months postoperative, had an almost full range of painless motion (bending, twisting) of the lumbar spine. The second patient, at 18 days postoperative, made an unscheduled visit to ask permission to go biking and reported a greater than 90% relief of all back and leg pains. The third patient showed approximately 1/3 range of normal painless motion of the lumbar spine on the sixth postoperative day.

The claims defining the invention are as follows:

1. A fusion cage for promoting fusion with one or more bone structures when a bone-growth inducing substance is packed into the fusion cage, comprising:

projection means for projecting into the bone structure to mate the fusion cage to the bone structure, the projection means defining a plurality of recesses which become filled with the bone structure on implantation;

an internal cavity into which the bone-growth inducing substance can be packed, the internal cavity extending via perforations into at least some of the recesses defined by said projection means; and

means for defining a land which at least partially blocks the recesses to prevent growth of disc tissue into the cage, wherein the means for defining a land becomes positioned in the disc space between the two vertebral bodies to prevent disc tissue growing into the fusion cage.

2. A fusion cage according to claim 1, wherein said means for defining a land provides a first and a second land which first land is positioned opposite the second land.

3. A fusion cage according to claim 1, which is positionable in the disc space between adjacent vertebral bodies wherein the cage has first and second opposed quadrants which are positioned in the disc space on implantation and third and fourth opposed quadrants which are in contact respectively with each of the vertebral bodies on implantation, and said means for defining a land provides two lands which are located respectively in the first and second opposed quadrants to prevent disc tissue ingrowth after implantation.

4. A fusion cage according to claim 1, which is positionable in the disc space between two vertebral bodies wherein the means for defining a land provides two lands which block the recesses defined by the projection means at opposite surfaces of the cage, these surfaces being positioned within the disc space between the two vertebral bodies on implanation to prevent growth of disc tissue into the cage.

Dated 27 January 1994
Surgical Dynamics, Inc.

Patent Attorneys for the Applicant/Nominated Person
SPRUSON&FERGUSON

AUSTRALIA PATENT OFFICE

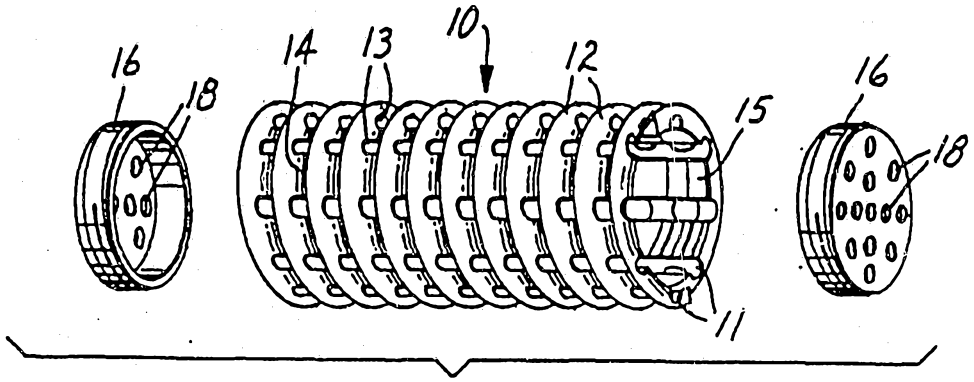

FIG. 1

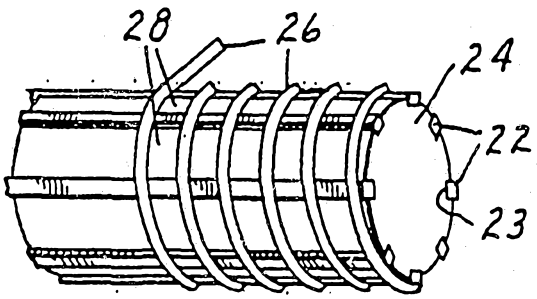

FIG. 2

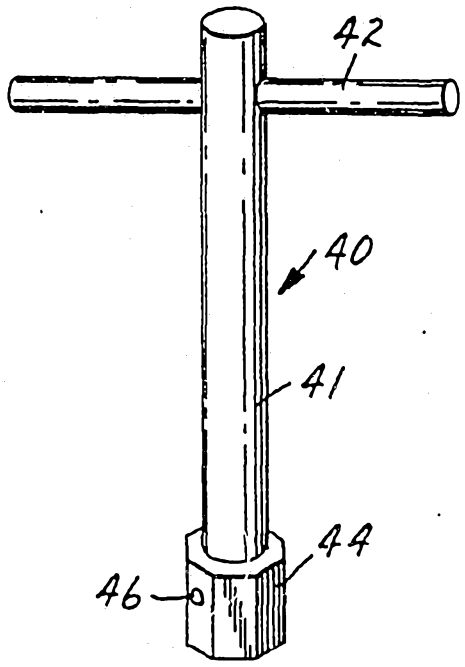

FIG. 4

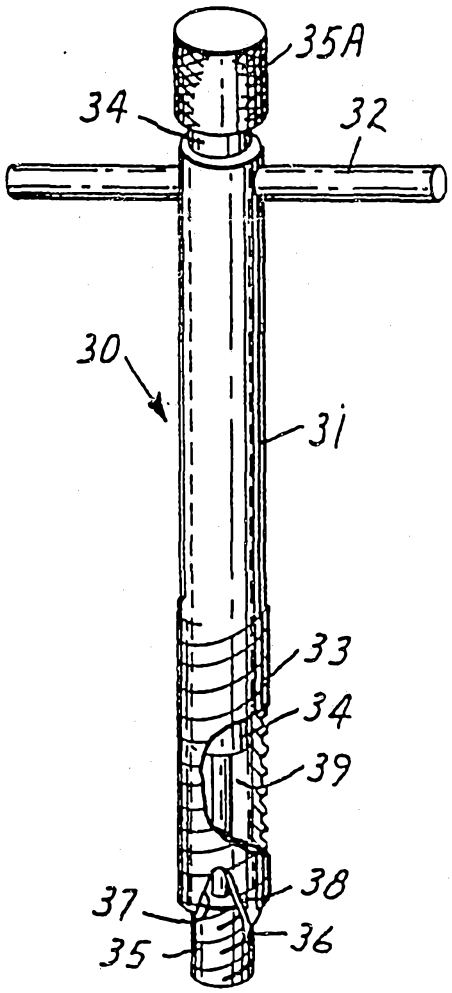

FIG. 3

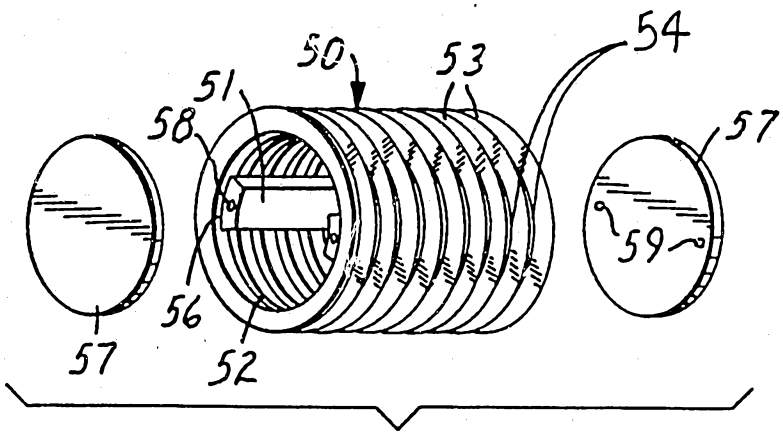

FIG. 5

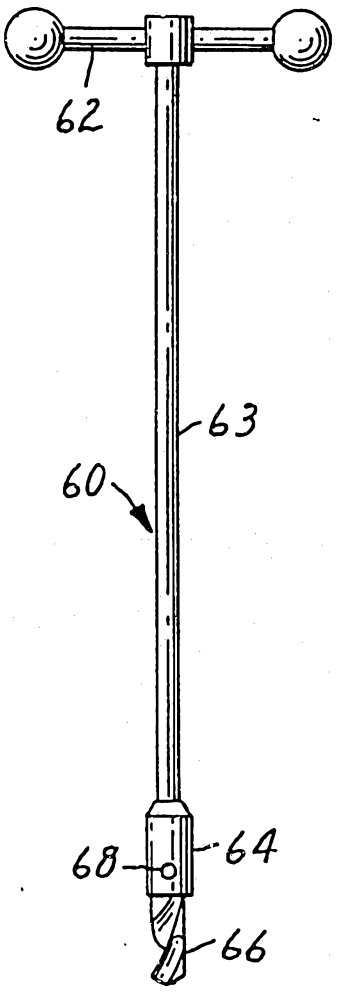

FIG. 6

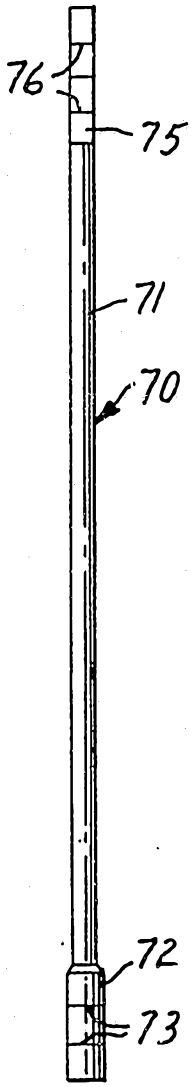

FIG. 7

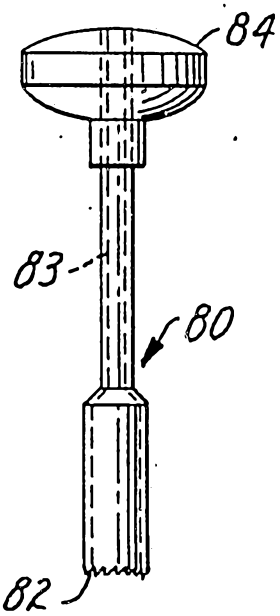

FIG. 8

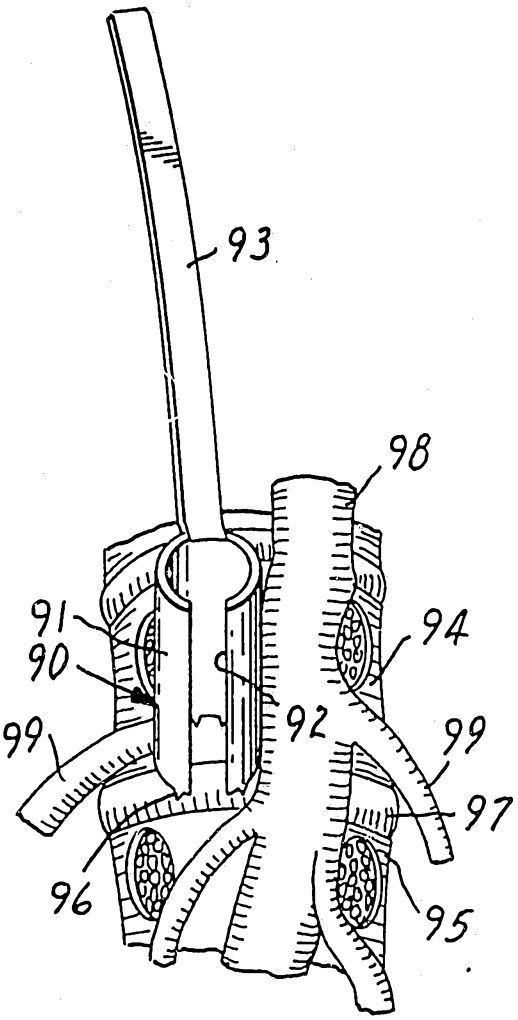

FIG. 9

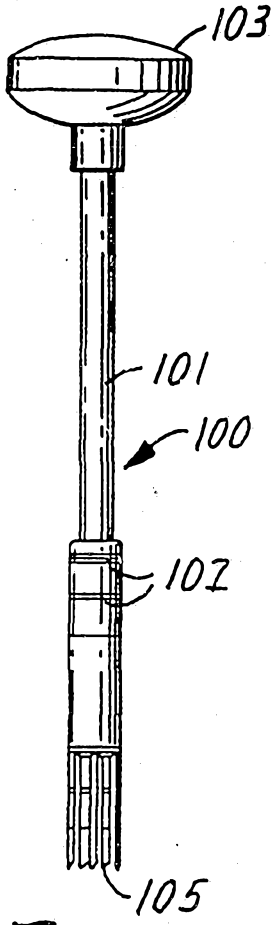

FIG.10

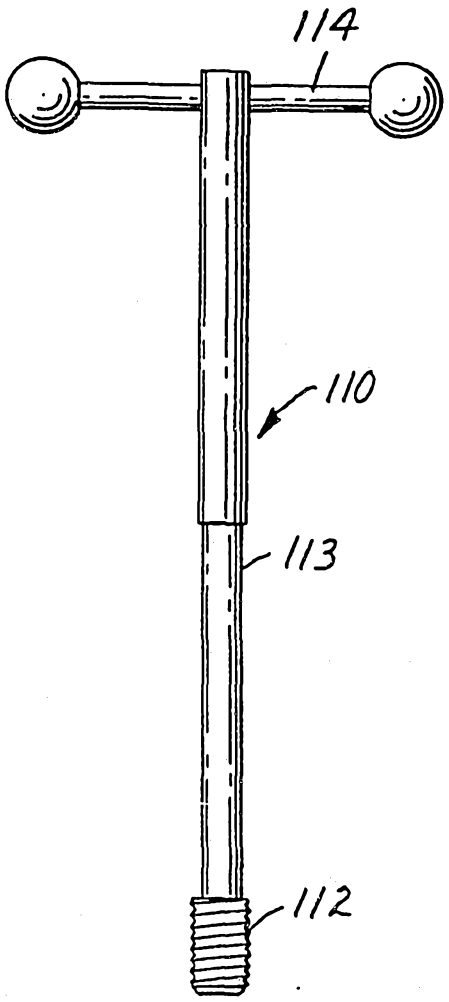

FIG.11

INTERNATIONAL SEARCH REPORT

International Application No PCT/US90/05318

I. CLASSIFICATION OF SUBJECT MATTER (If several classification symbols apply, indicate all) [3]

According to International Patent Classification (IPC) or to both National Classification and IPC

IPC[5]: A61F 2/44
US: 606/61,79,99;623;17

II. FIELDS SEARCHED

Minimum Documentation Searched [4]

Classification System	Classification Symbols
US	606/61,86,79,80,81,96,99,108 623/16-22

Documentation Searched other than Minimum Documentation to the Extent that such Documents are Included in the Fields Searched [6]

III. DOCUMENTS CONSIDERED TO BE RELEVANT [14]

Category *	Citation of Document, [16] with indication, where appropriate, of the relevant passages [17]	Relevant to Claim No. [18]
A	US,A RE 31865 (ROUX) 16 April 1985	1-13
A	US,A 4492226 (BELYKH ET AL) 8 January 1985	
A	US,A 4599086 (DOTY) 8 July 1986	
A	US,A 4522200 (STEDNITZ) 11 June 1985	
A	US,A 4677972 (TORNIER) 7 July 1987	1-13
A	US,A 3783860 (BURSTEIN ET AL) 8 January 1974	
A	US,A 4059115 (JUMASHEV ET AL) 22 November 1987	14-16
A	US,A 4657550 (DAHER) 14 April 1987	
A	US,A 4501269 (BAGBY) 26 February 1985	
A	US,A 3848601 (MA ET AL) 19 November 1974	

* Special categories of cited documents: [15]

"A" document defining the general state of the art which is not considered to be of particular relevance

"E" earlier document but published on or after the international filing date

"L" document which may throw doubts on priority claim(s) or which is cited to establish the publication date of another citation or other special reason (as specified)

"O" document referring to an oral disclosure, use, exhibition or other means

"P" document published prior to the international filing date but later than the priority date claimed

"T" later document published after the international filing date or priority date and not in conflict with the application but cited to understand the principle or theory underlying the invention

"X" document of particular relevance; the claimed invention cannot be considered novel or cannot be considered to involve an inventive step

"Y" document of particular relevance; the claimed invention cannot be considered to involve an inventive step when the document is combined with one or more other such documents, such combination being obvious to a person skilled in the art.

"&" document member of the same patent family

IV. CERTIFICATION

Date of the Actual Completion of the International Search [2]	Date of Mailing of this International Search Report [2]
24 January 1991	08 MAR 1991
International Searching Authority [1]	**Signature of Authorized Officer [19]**
ISA/US	for KERRY OWENS

Form PCT/ISA/210 (second sheet) (May 1986) DC 2-13-91

III. DOCUMENTS CONSIDERED TO BE RELEVANT (CONTINUED FROM THE SECOND SHEET)

Category *	Citation of Document, [11] with indication, where appropriate, of the relevant passages [12]	Relevant to Claim No [13]
A	US, A 3651807 (HUGGINS) 28 March 1972 see figure 1	17,18
A	US, A 4585437 (SIMMS) 29 April 1986 see figure 1	17,18
A,P	US, A 4878915 (BRANTIGAN) 7 November 1989	1-16

FURTHER INFORMATION CONTINUED FROM THE SECOND SHEET

A	DE, A 3505567 (VICH) 5 June 1986	
A	FR, A 2295729 (MAHAY + CIE) 23 July 1976	1-13
X Y	US, A 4802468 (DOWLAN) 7 February 1989 see figure 3	14 15
Y	US, A 4649918 (PEGG ET AL) 17 March 1987 see column 2, lines 47-50	15

V. ☐ OBSERVATIONS WHERE CERTAIN CLAIMS WERE FOUND UNSEARCHABLE [1]

This international search report has not been established in respect of certain claims under Article 17(2) (a) for the following reasons:

1. ☐ Claim numbers , because they relate to subject matter [1] not required to be searched by this Authority, namely:

2. ☐ Claim numbers , because they relate to parts of the international application that do not comply with the prescribed requirements to such an extent that no meaningful international search can be carried out [1], specifically:

3. ☐ Claim numbers_____, because they are dependent claims not drafted in accordance with the second and third sentences of PCT Rule 6.4(a).

VI. ☐ OBSERVATIONS WHERE UNITY OF INVENTION IS LACKING [2]

This International Searching Authority found multiple inventions in this international application as follows:

1. ☐ As all required additional search fees were timely paid by the applicant, this international search report covers all searchable claims of the international application.

2. ☐ As only some of the required additional search fees were timely paid by the applicant, this international search report covers only those claims of the international application for which fees were paid, specifically claims:

3. ☐ No required additional search fees were timely paid by the applicant. Consequently, this international search report is restricted to the invention first mentioned in the claims; it is covered by claim numbers:

4. ☐ As all searchable claims could be searched without effort justifying an additional fee, the International Searching Authority did not invite payment of any additional fee.

Remark on Protest

☐ The additional search fees were accompanied by applicant's protest.

☐ No protest accompanied the payment of additional search fees.