H. W. ABELMANN.

APPARATUS FOR TRANSFUSION OF BLOOD.

APPLICATION FILED FEB. 3, 1915.

1,175,108.

Patented Mar. 14, 1916.

2 SHEETS—SHEET 1.

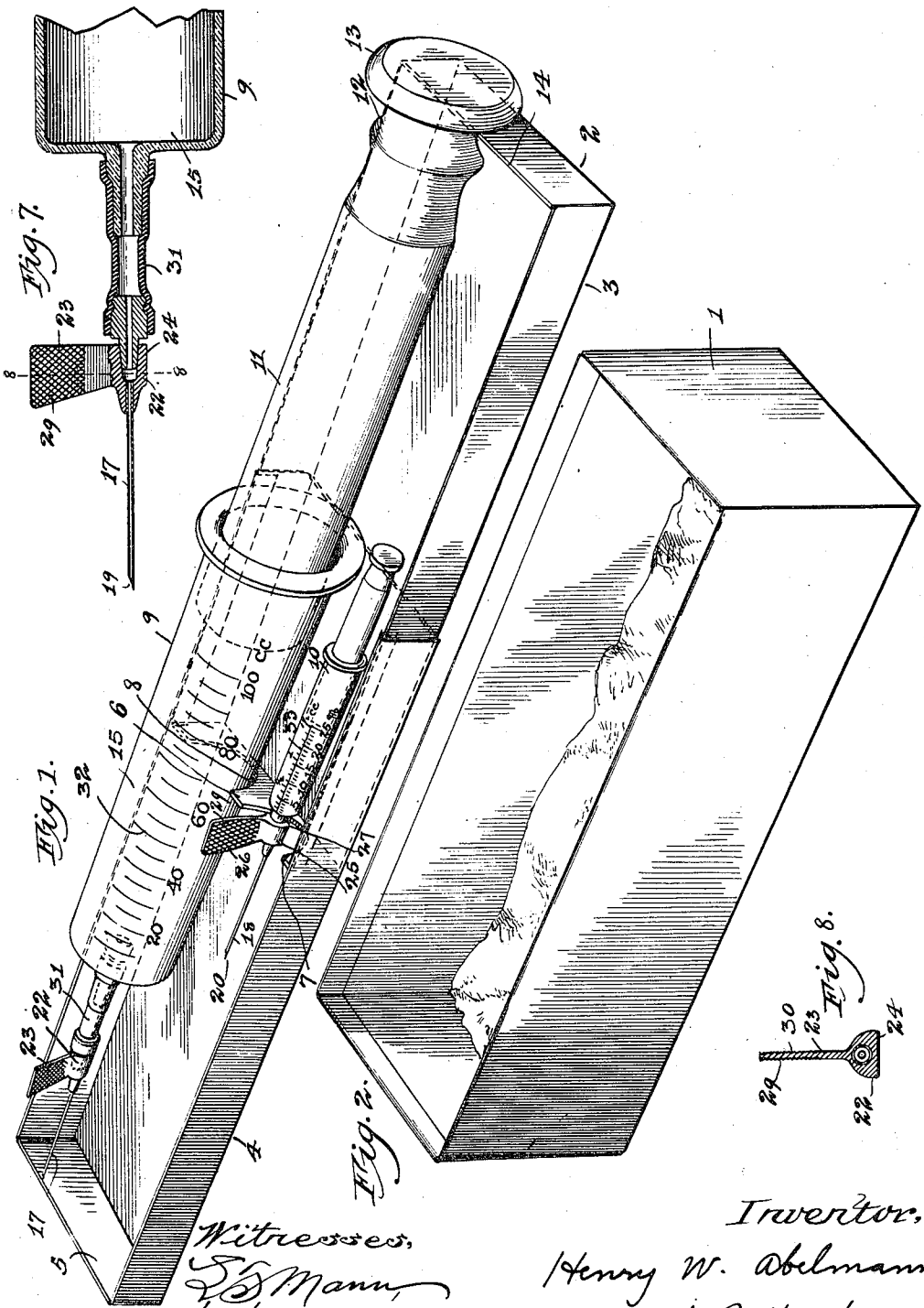

Witnesses,
C. B. Belknap
Inventor,
Henry W. Abelmann
By Frank L. Belknap Atty.

H. W. ABELMANN.

APPARATUS FOR TRANSFUSION OF BLOOD.

APPLICATION FILED FEB. 3, 1915.

1,175,108.

Patented Mar. 14, 1916.

2 SHEETS—SHEET 2.

Fig. 5.



Fig. 3.

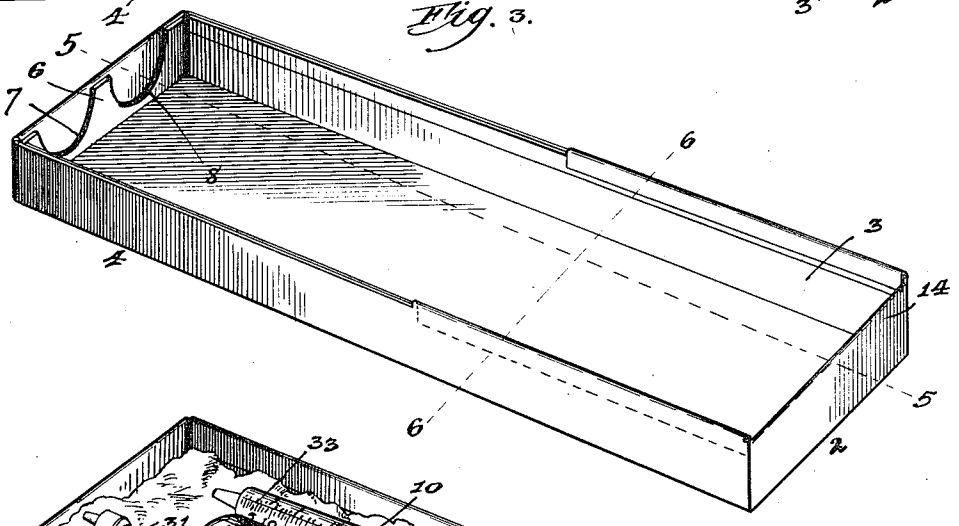

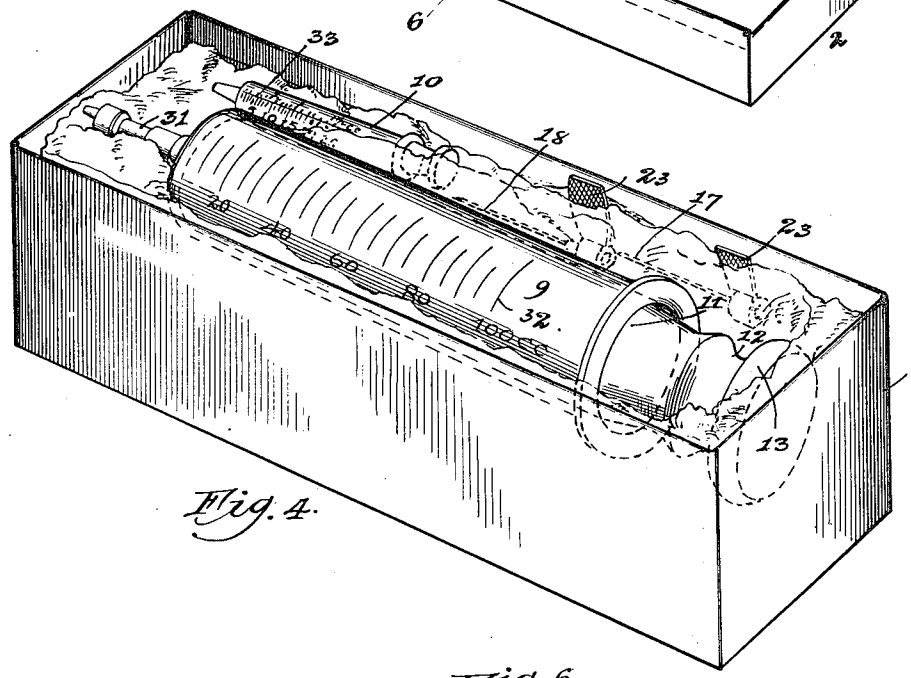

Fig. 4.

Fig. 6.

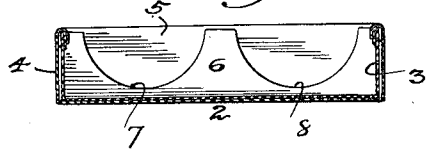

Witnesses,

L. E. Mann

C. B. Belknap

Inventor,

Henry W. Abelmann

By Frank L. Belknap Atty.

UNITED STATES PATENT OFFICE.

HENRY W. ABELMANN, OF CHICAGO, ILLINOIS.

APPARATUS FOR TRANSFUSION OF BLOOD.

1,175,108. Specification of Letters Patent. Patented Mar. 14, 1916.

Application filed February 3, 1915. Serial No. 5,878.

To all whom it may concern:

Be it known that I, HENRY W. ABELMANN, a citizen of the United States, residing in the city of Chicago, county of Cook, and State of Illinois, have invented certain new and useful Improvements in Apparatus for Transfusion of Blood, of which the following is a specification.

My invention relates to apparatus for the transfusion of blood, and more particularly to an apparatus by means of which a known quantity of blood can be transferred from the donor to the recipient.

Among the salient objects of the invention are to provide an apparatus by means of which the transfusion can be performed at the home of the patient or the office of the physician, by a general practitioner; to provide an apparatus by means of which the transfusion can be performed by one person and in a relatively short time and, also, with a minimum inconvenience to the donor and the recipient; to provide an apparatus which is sufficiently compact to be carried in the coat pocket; to utilize the cover of the container as a combination syringe tray and case cover, the construction being such that, when employed as a syringe tray, it has stationary syringe-holding portions for accommodating two syringes and holding them in properly spaced relation; to so arrange the tray that it eliminates danger of contamination of the needles and prevents the sliding of the piston, thereby eliminating the inadvertent ejection and dripping of any blood or the inadvertent entrance of air into the syringe; to employ a sliding extension of the cover as a drip pan, this extension being telescopically engaged with the remainder of the cover and the entire tray being adapted, when closed, to serve as a cover for the case; to provide the transfusion needle with a guide, which facilitates the safe introduction of the needle-point into the vein, the side surfaces of the guide being knurled to form an anti-slipping medium; to provide means for preventing the contamination of the needle through handling and to so mount the guide that it will indicate the exact position of the cutting edge of the needle, thus avoiding delay in determining the correct position of the needle; to provide an apparatus by means of which the transfusion can be accomplished without mutilation of the tissues and without the necessity of an operation such as would require local or general anesthetics; to provide a transfusion apparatus by means of which the blood aspirated can be kept in a liquid state for a considerable period of time, thus permitting the blood to be aspirated from the veins of the donor in one room and injected into the veins of a recipient placed in a separate room; to provide an apparatus by means of which small doses of blood can be repeatedly aspirated and injected at intervals, thus extending the scope of cases which can be treated by blood transfusion, since the condition of certain patients would not permit large quantities of blood being injected at one operation; and in general to provide an apparatus of the character referred to by means of which blood transfusion can be accomplished in a simple, reliable and generally safe manner.

In the drawings—Figures 1 and 2 are perspective views showing the parts in position for use. Figs. 3 and 4 are perspective views of the apparatus showing the manner of packing the same. Fig. 5 is a longitudinal vertical section through the extensible cover taken on the line 5—5 of Fig. 3. Fig. 6 is a vertical section taken on the line 6—6 of Fig. 3. Fig. 7 is a longitudinal section through one of the syringes. Fig. 8 is a cross-section taken on the line 8—8 of Fig. 7.

Referring in detail to the particular embodiment of my invention disclosed in the drawings, 1 designates a package or container having a removable cover 2. This cover 2 comprises two sections 3 and 4, which telescopically engage each other. In their contracted position as shown in Fig. 3 they are of a proper size to form a lid for the container. The purpose of having the cover in telescopic sections is to provide means whereby it may be extended to serve as a syringe tray. In the position shown in Fig. 1 the section 4 is moved outwardly so that its end 5 is spaced a considerable distance from the normal corresponding end 6 of the section 3. When the cover is employed as a syringe tray, the end 6 serves as a supporting bridge or holder, and for this purpose is provided with curved seats 7 and 8 for receiving a pair of syringes and holding them in proper spaced relation. These syringes 9 and 10 are preferably all-glass syringes, and the piston or plunger 11 of

the larger syringe has a concave portion 12 adjacent its knob 13. When placing the syringe 9 on the cover or tray 2, it is so positioned that the concave portion 12 engages the end 14 of the section 3, and this arrangement together with the concave seat 8 serves to hold the syringe from lateral or longitudinal movement, and the latter is especially important since it prevents the piston portion from accidentally moving outwardly and sucking air into the blood-receiving chamber 15, or moving inwardly thereby causing the dripping of blood. The syringe 10 is also preferably an all-glass syringe, but it may be of considerably smaller size. Both syringes 9 and 10 are provided with detachable slip-joint needles 17 and 18 respectively, these needles being interchangeable with the syringes for the purpose hereinafter set forth.

Referring in detail to the construction of the needles 17 and 18, it will be noticed that their ends 19 and 20 are beveled and have relatively blunt points. The base 22 of the needle 17 is provided with a guide 23 extending upwardly while its lower surface 24 is formed flat so as to hold the guide normally in an upright position. The base 25 of the needle 18 has a similar guide 26, a flat lower surface 27, and the side surfaces 29 and 30 of the guides 23 and 26 are preferably knurled to provide a better gripping surface. Thus the guide serves to indicate the correct position of the needle, and also as a gripping portion, which lends ease and control to the operation, by means of which it can be handled without danger of contaminating the needle.

The needle 17 is preferably attached to the syringe 9 by means of a flexible tubular member 31 formed of rubber or like material. By using the flexible connection between the needle and the syringe, it is possible to hold the syringe in various positions of adjustment and at the most convenient angle without affecting the position of the needle. The barrel portions of the syringes 9 and 10 are provided with graduations 32 and 33 so that at all times it can be readily determined the exact amount of blood aspirated or injected.

In order to more clearly illustrate the functions and advantages of the novel apparatus above described, I will now set forth in detail the use of the apparatus, though I do not desire in this application to patent the method. Assuming that it is desired to transfuse 100 cc. of blood, the apparatus is used as follows: The syringes previous to use are sterilized by boiling in water for a period of five minutes, the syringes first being taken apart to avoid cracking them, due to the unequal expansion of the parts. The syringe 9, which is used for aspirating and injecting blood, is taken from the basin while it is still hot, and when the water is evaporated on the syringe and the latter is still warm, a small quantity of sterilized vaseline heated to the liquid state is taken up through the needle. The plunger 11 is then worked up and down, and the excess of vaseline is forced out of the syringe while it is still hot. This procedure gives the inner surface of the barrel 15 and the needle 17 a thin coating of vaseline, which has a tendency to delay coagulation and at the same time to prevent the entrance of air. After the syringe has been adjusted, it is filled with 5 cc. of a 1.5% solution of sodium citrate of an .85% solution of NaCl, which also tends to exclude the air from the needle and to retard clogging when the blood is drawn. The syringe having been prepared for use in this manner, the patient and donor are placed in a recumbent position, and a moderately tight tourniquet is placed around the upper arm to distend the veins at the elbow but not tight enough to obstruct arterial flow. The blood is then drawn from the donor by thrusting the needle into the most prominent of the distended veins, and slowly retracting the piston or plunger 11, until the graduations on the barrel show that 100 cc. or whatever amount is desired has been drawn into the barrel 15. As soon as the syringe is filled, the tourniquet is removed, and the needle withdrawn. 5 cc. of the same citrate solution is then taken up through the needle, and the blood in the syringe 9 is ready for injection. Meanwhile, the syringe 10 has been filled with ten minims of the sodium citrate solution, and the needle 18 is inserted into the recipient's vein. The blood pressure in this vein will force the plunger outward, thereby indicating to the physician that the needle is in the lumen of the vein, and he then disengages the syringe 10 from the needle 18 and connects the latter with the syringe 9. The tourniquet on the recipient's arm is quickly removed, and with moderate pressure of the piston or plunger 11 the donor's blood is injected into the recipient's vein.

While the physician would preferably use an assistant, it is possible for him with the use of my invention to perform the transfusion without any assistance, thus upon withdrawing the needle 17 from the veins of the donor the blood-filled syringe 9 is laid upon the tray so that its forward end rests in the curved seat 8, and the concave portion 12 engages the end 14 of the section 3, the syringe being placed upon the tray so that the guide 23 extends upwardly. At the same time the syringe 10 is taken up, and the needle 18 introduced into the vein of the recipient. After determining that the needle 18 is properly inserted into the vein of the recipient, the syringe 10 is disconnected and syringe 9 taken up and rap-

idly exchanged for it. Then upon the forward movement of the plunger 11, the blood is injected in the manner described.

Where it is desired to transfuse more than 100 cc., an assistant can be employed for filling the syringe with the donor's blood, and the assistant then slips the syringe from the needle and gives the filled syringe to the nurse who stands in readiness with another 100 cc. syringe, which she hands to the assistant, who immediately makes connection for the second tapping. The nurse then adds the 5 cc. of the aforesaid solution to the blood in the first mentioned syringe, and gives it to the physician who in turn gives the nurse his empty syringe, and then immediately proceeds to inject the blood into the recipient's veins. While the doctor is injecting and the assistant is drawing the blood, the nurse can prepare another syringe for a third tapping, and so on until the desired amount has been transferred.

By employing an apparatus embodying my invention, the danger of transmitting the disease of a patient to the donor is eliminated, and any clogging of the blood is impossible. Also dangers such as air, clot, embolism and infection are practically eliminated, and no offensive scars remain. The danger of blood incompatibility, hemolysis, and agglutination is also abolished, as the effect of a small quantity of the blood injected into the veins of the recipient will prove the fitness of the donor's blood for transfusion. The apparatus places the operation of transfusing blood within the reach of the general practitioner, and uneasiness and nervousness of both donor and recipient are minimized owing to the painlessness and simplicity of my method of blood transfusion when carried out with my apparatus, because by employing the apparatus described the quantity of blood can be measured, the transfusion will not weaken the donor, on the contrary he feels better after the extraction of blood than before, and the recipient in turn will experience no ill effects nor die as is sometimes the result of giving larger doses of blood. Another advantage obtained by my invention is, that it permits the transfusion of the blood to be repeated as often as desired since there is no mutilation of the tissues, and the inconvenience to the donor and the recipient is relatively slight.

While I have shown and described a particular apparatus for transfusing blood, I do not desire to limit my invention to the particular arrangement of parts shown nor in any manner except as is specified in the appended claims.

I claim as my invention:

1. In apparatus for the transfusion of blood, the combination with a syringe, of a needle detachably secured to said syringe, said needle having a base portion provided with a flat lower surface and a guide extending from its upper surface at right angles to the plane of the lower surface.

2. In apparatus for the transfusion of blood, the combination with a syringe, of a needle detachably secured to said syringe, said needle having a base portion provided with a flat lower surface and a guide extending from its upper surface at right angles to the plane of the lower surface, said guide portion being knurled to provide a gripping surface.

HENRY W. ABELMANN.

Witnesses:
C. B. BELKNAP,
JOYCE M. LUTZ.