June 22, 1943. A. J. VERDECHIA 2,322,605

WIRE TAGGING MACHINE

Filed July 18, 1942

FIG. 2

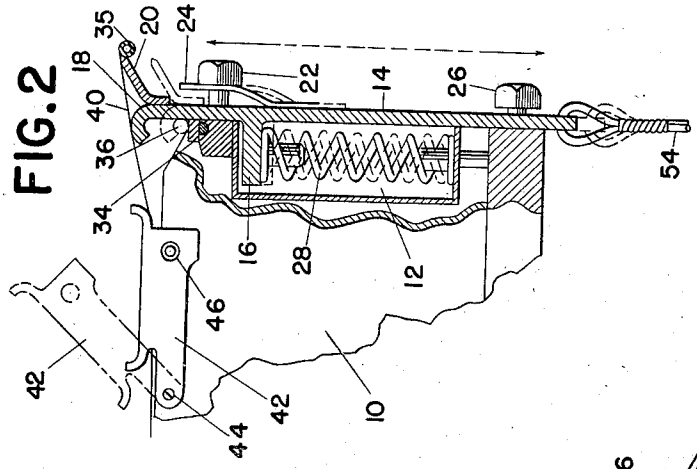

FIG. 1

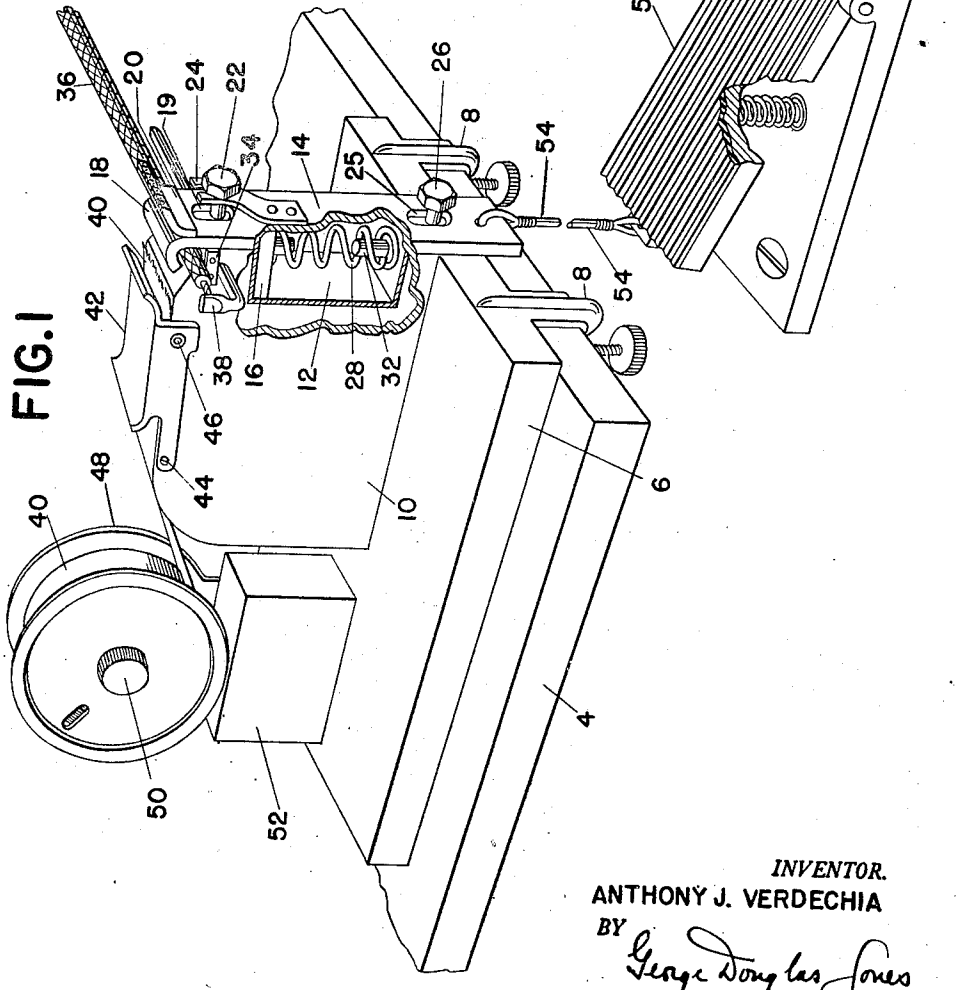

INVENTOR.

ANTHONY J. VERDECHIA

BY George Douglas Jones

ATTORNEY

Patented June 22, 1943

2,322,605

UNITED STATES PATENT OFFICE

2,322,605

WIRE TAGGING MACHINE

Anthony J. Verdechia, Baltimore, Md., assignor to The Glenn L. Martin Company, Middle River, Md., a corporation of Maryland

Application July 18, 1942, Serial No. 451,517

3 Claims. (Cl. 216—33)

This invention relates to tagging machines and particularly, to a machine for wrapping articles such as aircraft cable or wire with colored tape for identification purposes.

Unless the kind and quality of every cable or wire used in the assembly of an airplane can be easily and accurately identified, serious mistakes will occur.

The inventor has discovered that colored tape of the cellulose adhesive or "Scotch Tape" variety, having a tacky side and a smooth side, is particularly suited for use as a means for identifying aircraft cable or wire because of its weight, color, cost and durability.

Heretofore, attempts have been made to wrap this tape by hand around aircraft cable or wire to identify it. These attempts, however, have been unsuccessful because it took too long to wrap the tape around the cable or wire by hand. They were also unsuccessful because when the tape was so wrapped, it did not firmly adhere to the cable or wire and had a tendency to unwind and fall off.

The primary object of the present invention is to provide a time saving means for permanently attaching colored adhesive tape of the cellulose adhesive variety to an aircraft cable or wire, to identify it.

Another object of the present invention is to provide a device for winding colored identification tape of the cellulose adhesive variety around a cable or wire and then pressing it into a permanent set on said cable or wire to insure a permanent bond thereto.

A still further object of the present invention is to provide a combination wrapping, pressing and cutting machine for tagging cable or wire with colored tape of the cellulose adhesive variety for identification purposes.

Further and other objects will become apparent from the description of the accompanying drawing which form a part of this disclosure and in which like numerals refer to like parts.

In the drawing:

Figure 1 is a perspective view of a cable or wire tagging machine showing a wire in position for tagging.

Figure 2 is an enlarged side view partially in section of the tagging mechanism.

A unitary machine for tagging wire with colored tape of the cellulose adhesive variety is shown in Figure 1. Base 6 is attached to bench 4 by clamps 8. Connected to the front side of base 6 is a pedestal 10 having a conventional tape guide 42 pivotally connected thereto at 44. Tape guide 42 is adapted to be swung about the pivot 44 and is held in guiding position by lock 46.

The pedestal 10 also contains an anvil portion 34. Cooperating with anvil portion 34 is a sliding clamp member 14 having the circular head portion 18 and knife portion 20. The sliding clamp member 14 is slidably mounted on the front of pedestal 10 and is held in vertical alignment therewith by means of the horizontally projecting bolts 22 and 26 in slots 19 and 25.

A slotted spring clip 24 attached to the front side of sliding clamp member 14 resiliently and slidably engages bolt 22 to insure the uniform vertical movement of said member.

The sliding clamp member 14 is also provided with a rearwardly and horizontally projecting lug 16 adapted to move up and down in chamber 12 of pedestal 10. Lug 16 is connected to spring 28 in chamber 12. Spring 28 exerts a force on lug 16 which tends to move sliding clamp member 14 upwardly. When the sliding clamp member 14 is held in the up position by spring 28, the circular head portion 18 is not in contact with anvil 34.

A cable 54 joins sliding clamp member 14 to a foot operated treadle 56 causing the sliding clamp member 14 to move downwardly against the upwardly directed forces of spring 28 when force is applied to treadle portion 56. When the sliding clamp member 14 is moved downwardly in this manner, the circular head portion 18 is forced against anvil 34 and a tape wrapped wire 36 resting on anvil 34 is pressed into a permanent set. Treadle 56 is a conventional foot operated treadle.

Also mounted on base 6 is another pedestal portion 52 having the reel holder 48 connected thereto. Reel holder 48 is adapted to hold a spool of colored cellulose adhesive tape 40 of the "Scotch Tape" variety on its axle 50.

In operation, tape 40 is pulled from a spool held in reel holder 48. The tape 40 is pulled over the top of the pedestal 10 through guide 42 until it rests on the top of jaw 18 and knife 20 of sliding clamp member 14, with its smooth side facing downwardly and its tacky side facing upwardly as shown in Figure 2. A piece of wire 36 to be tagged is then held above the tacky side of the tape and one of its ends is lined up with the wire measuring arm 38. Wire measuring arm 38 is adapted to help the tagging machine operator wind the tape 40 around the wire 36 at uniform distances from one extremity.

When the end of the piece of wire 36 to be tagged is in proper alignment, the operator then

brings the wire 36 downwardly against the upwardly faced tacky side of tape 40 which is extended over the top of table portion 10 through guide 42 to the top of jaw 18 of sliding clamp member 14.

As soon as the wire is brought into contact with the tacky side of tape 40, the operator rotates wire 36 winding a desired amount of tape 40 around it with the smooth side of the tape 40 on the outside.

When a sufficient amount of tape 40 has been wound around the piece of wire 36, the operator places the tape wound wire on the anvil 34 under the head 18 of the vertically moving sliding clamp member 14 and steps on the treadle 56 which causes head 18 to move toward anvil 34 and engage the tape wound wire 36. The head 18 exerts a great force on the tape wound wire 36 resting on anvil 34 and presses it into a permanent set or bond with wire 36. Head 18 is actuated by the treadle 56 which is conveniently placed with respect to the foot of the operator.

The operator removes the tagged wire 35 from the top of anvil 34 and severs it from the remainder of tape 40 by means of knife 20. This leaves a remaining section of tape 40 in position on top of head 18 to receive another piece of wire.

From the operation of the device described above, it will be seen that an identification tape is wound on and firmly secured to a wire at a predetermined distance from the end of the wire in a relatively simple, convenient and expeditious manner.

It is to be understood that certain changes, alterations, modifications and substitutions can be made without departing from the spirit and scope of the appended claims.

I claim as my invention:

1. A wire tagging machine comprising a tape dispensing means, an anvil member adjacent said tape dispensing means, a sliding clamp member adapted to engage and clamp a wire lying on said anvil member, said sliding clamp member having a knife portion secured thereto, to cut the tape from the wire, said knife portion serving to support the tape after the cut-off operation and means for urging said clamp toward said anvil to engage said article lying thereon.

2. A wire tagging machine comprising a base portion, an anvil member mounted on said base, a sliding clamp member for engaging an article lying on said anvil, a tape cutting means secured to said clamp, said cutting means serving for a support for the tape end after the cutting operation, a tape dispenser connected to said base adjacent said anvil member, means for urging said clamp toward said anvil to engage an article lying thereon, and means cooperating with said first mentioned means and forming a part thereof for urging said clamp away from said anvil and out of engagement with said article.

3. A wire tagging machine comprising an anvil member on which a wire to be tagged may be rested, means for dispensing marking tape with the tacky side up to be wrapped around the wire, a jaw member having a concave portion adapted to conform with the contour of the wire for a length equal to, at least, the width of the tag, said jaw member being mounted to move with respect to the anvil member thereby exerting a clamping action on the wire, pedal means for producing the motion of the jaw member, whereby the tape wound wire is squeezed between the anvil and the jaw to obtain a lasting bond between the tape and the wire.

ANTHONY J. VERDECHIA.