E. J. YOUNG & J. H. WEAVER.

MACHINE FOR MAKING MATCHES.

APPLICATION FILED MAR. 9, 1908.

920,513.

Patented May 4, 1909.

3 SHEETS—SHEET 1.

Fig. 1.

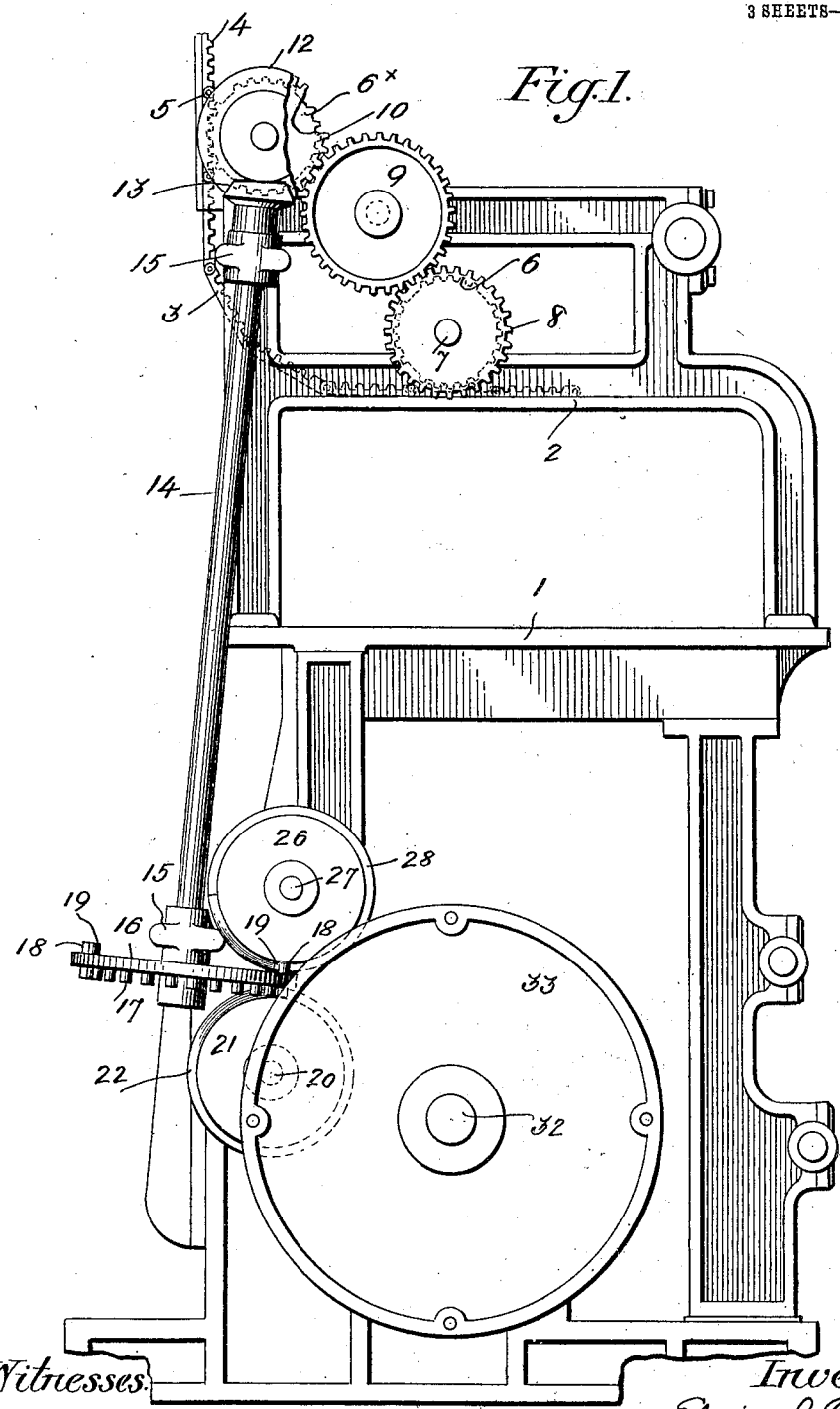

Witnesses.

E. A. Sinnickel.

Lillie M. Perry.

Inventors.

Edwin J. Young

James H. Weaver

by Wm. N. Finckel Atty.

THE NORRIS PETERS CO., WASHINGTON, D. C.

E. J. YOUNG & J. H. WEAVER.

MACHINE FOR MAKING MATCHES.

APPLICATION FILED MAR. 9, 1908.

920,513. Patented May 4, 1909.

3 SHEETS—SHEET 2.

Fig. 3.

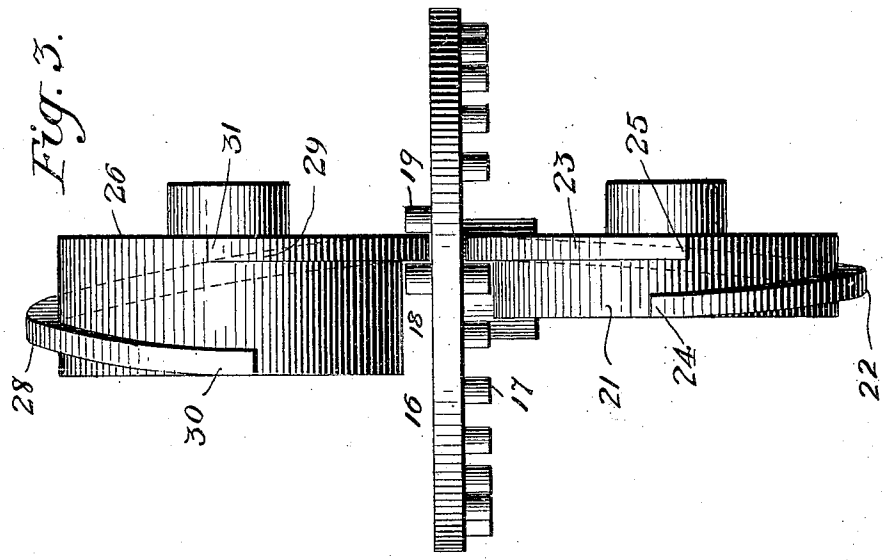

Fig. 2.

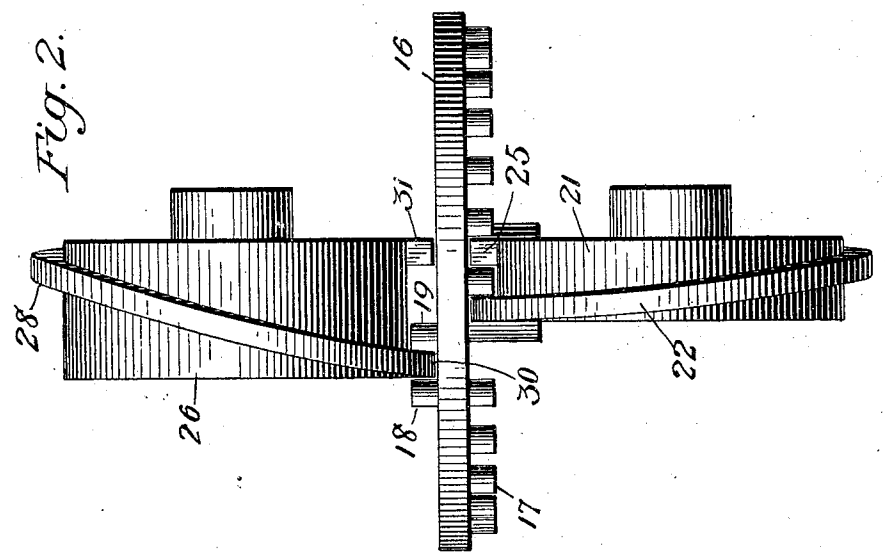

Witnesses:

E. A. Finckel.

Lillie M. Perry.

Inventors.

Edwin J. Young

James H. Weaver

by Wm. H. Finckel

Atty.

THE NORRIS PETERS CO., WASHINGTON, D. C.

E. J. YOUNG & J. H. WEAVER.

MACHINE FOR MAKING MATCHES.

APPLICATION FILED MAR. 9, 1908.

920,513. Patented May 4, 1909.

3 SHEETS—SHEET 3.

Fig. 4.

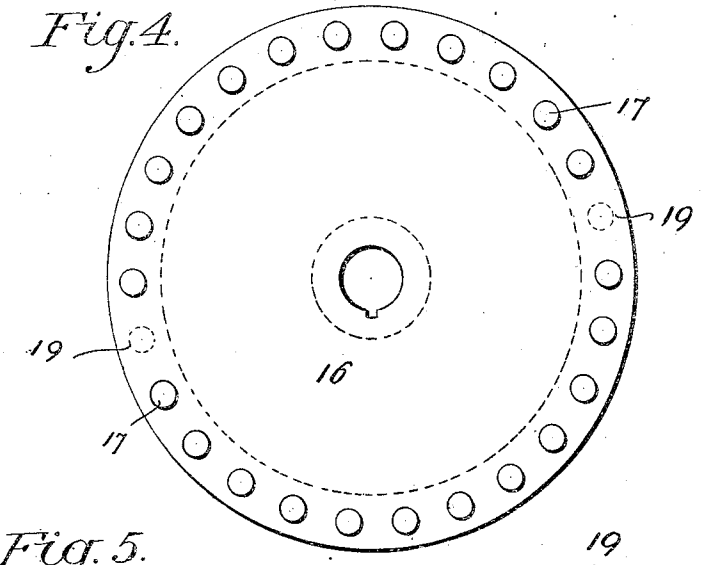

Fig. 5.

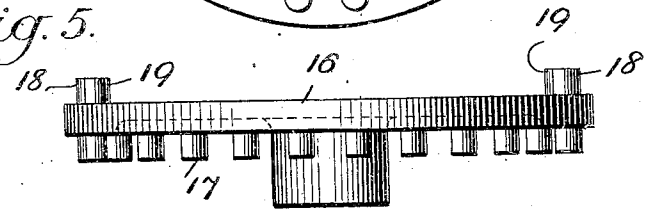

Fig. 6.

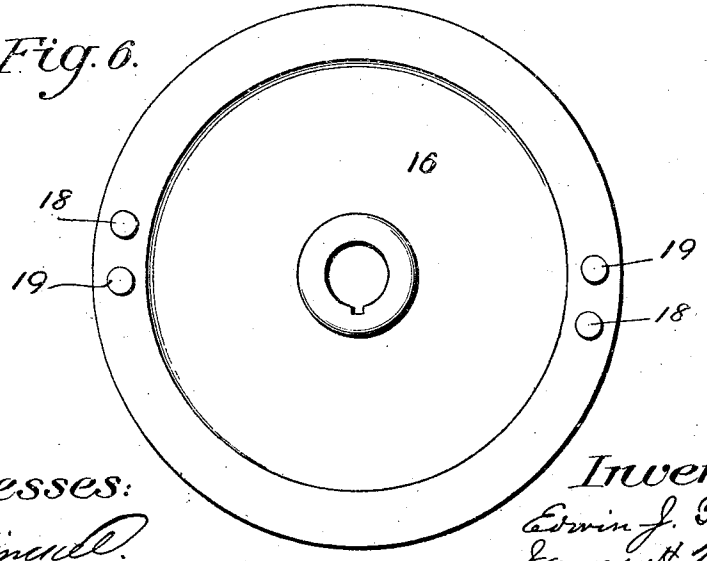

Witnesses:

E. L. Finckel.

Lillie M. Perry.

Inventors:

Edwin J. Young

James H. Weaver

by Wm. H. Finckel

Atty.

THE NORRIS PETERS CO., WASHINGTON, D. C.

UNITED STATES PATENT OFFICE.

EDWIN J. YOUNG AND JAMES H. WEAVER, OF WADSWORTH, OHIO, ASSIGNORS TO THE OHIO MATCH COMPANY, OF WADSWORTH, OHIO, A CORPORATION OF OHIO.

MACHINE FOR MAKING MATCHES.

No. 920,513. Specification of Letters Patent. Patented May 4, 1909.

Application filed March 9, 1908. Serial No. 419,946.

To all whom it may concern:

Be it known that we, EDWIN J. YOUNG and JAMES H. WEAVER, citizens of the United States, residing at Wadsworth, in the county of Medina and State of Ohio, have invented a certain new and useful Improvement in Machines for Making Matches, of which the following is a full, clear, and exact description.

In the class of continuous match-making machines where an endless chain of splint or stick-carrying plates is used to receive the sticks as they are cut and carry them thence over a heating surface to a wax-applying machine and thence to one or more machines for applying the head of igniting composition, and thence over rollers for drying purposes, back to the place of the stick-cutting machine where the finished matches are discharged for boxing, the traveling chain of plates is given a regular step-by-step movement corresponding with the number of holes in each plate,—usually twelve. These rows of holes are spaced apart equally, but the plates are connected by hinge-joints, and these hinge-joints are so proportioned with respect to the rows of holes as to make the distance between the last row of holes nearest the hinge-joint in one plate and the first row of holes nearest the hinge-joint in the next succeeding plate bear a fixed relation to the distance between any two rows of holes in any plate. For convenience, this hinge-joint distance is twice the distance between the rows. Since the movement of the chain of plates must be regular in order to properly present the plates to the cutting and sticking mechanisms and the discharging mechanism, respectively, it follows that while the plates are being moved a given distance in a given interval of time in order to present the successive rows in the several plates to these respective mechanisms, the chain must be moved twice that distance in a like interval of time in order to pass each hinge-joint. These movements have been accomplished by a pawl and ratchet mechanism, but in a jerky way, and by a pin-wheel and cam, (a sort of worm-gearing;) but the chain is long, (it may be two hundred or more feet,) and it is quite heavy, and hence more or less influenced by gravity or inertia as it is dragged through the apparatus and around the rollers about which it moves for drying the matches, and it is in places slack, so that unless controlled positively at the theoretical starting point opposite the cutting and sticking mechanism, there is danger of retrograde movement or back-lash.

It is the purpose and object of this invention to provide against such retrograde movement of the endless carrier chain, and to hold the prime mover positively, first, in the impulses given to it, to effect not only the step-by-step regular movement mentioned, but also the quickened movement to pass the hinges, and second, in the periods of rest while the sticks are being inserted in the plates at one point and finished matches are being discharged at another and nearby point. The result is that the machine may be speeded without liability of the carrier chain fouling, and with the assurance of a steady feed or progression of the carrier chain throughout the machine, without shock or jerk.

The invention consists of a pin-wheel and cam, or worm-gearing, wherein the cam is so constructed that it never releases one pin until it engages the next, and this is effected by having the ends of the cam-rib overlap lengthwise, so that while one pin is being pushed against by a part of the cam-rib to rotate the pin-wheel, another pin comes within touch of another part of the cam-rib and hence there is never a time in the cycle of movements when the pin-wheel is not in active control of the cam, either in being rotated or in being held against rotation. There results, therefore, an active control both of the regular step-by-step movement and the quickened movement of the carrier chain of such character as to preclude all retrograde motion or back-lash.

The preferred embodiment of our invention is herein shown in connection with the invention of Patent No. 851,848, granted April 30, 1907 and owned by the owners of the present invention, although the principle of the invention is susceptible of wider application.

In the accompanying drawings, illustrating the invention, in the several figures of which like parts are similarly designated, Figure 1 is a side elevation of sufficient of a well-known type of match-making machine

to show the application of the invention. Fig. 2 is a front elevation (diagrammatic) of the pin-wheel and cams in position where the step-by-step cam has given place to the operation of the quick-pitch cam. Fig. 3 is a front elevation (diagrammatic) of the pin-wheel and cams in position where the quick-pitch cam is completing its motion and giving place to the step-by-step cam. Fig. 4 is a bottom plan view of the pin-wheel. Fig. 5 is an elevation of the pin-wheel. Fig. 6 is a top plan view of the pin-wheel.

As already sufficiently indicated, the match-making machine to which the invention is applied comprises the "machine" proper, so-called in the shops, for cutting the match-sticks or splints from blocks of wood which are fed to a cutter, sticking them in the carrier plates, and discharging the finished matches from such plates, and a support and driving mechanism for the endless chain of carrier plates, and a stick-heater, a wax or paraffin melting and applying apparatus, one or more composition-applying mechanisms, and a series of supporting rollers about which the endless chain has a serpentine travel from the composition applying mechanism back to the so-called "machine."

Specifically, as shown in Fig. 1, the frame 1 has a way 2 on which travels the endless chain of plates 3, these plates having, as usual, the marginal toothed racks 4 and the interposed connecting hinge-joints 5. The plates of the chain of plates have, as usual, the series of transverse perforations arranged in rows to receive the match splints and these rows are spaced apart uniformly, and the space between the last row of holes of one plate and the first row of holes in the next succeeding plate, occupied by the hinge joints, is equal to twice the distance between any two rows of holes in any one plate. The toothed racks 4 are engaged by mutilated gear-wheels 6 on the shaft 7, and this shaft has a pinion 8 engaged by an idler 9, which in turn is engaged by a pinion 10 on a shaft 11, which latter carries similar mutilated gear-wheels $6^{\times}$ also engaging the toothed racks 4. The shaft 11 has a bevel gear 12, which is engaged by a bevel pinion 13, on an upright, slightly inclined, shaft 14, mounted in bearings 15 on the frame 1.

The shaft 14 has at its lower end a pin-wheel 16, and this pin-wheel has two sets of pins 17, twelve to a set, or any number corresponding to the number of rows of holes in each plate. The pins 17 of the sets of pins are spaced apart equally, and the sets of pins are separated by a space equal to the distance between any two of the pins of any set to correspond with the hinge joint spaces in the endless chain. Above the last of the pins in any set, relatively to the direction of rotation of the pin-wheel, is placed on the upper side of the pin-wheel another pin 18, and next to this pin 18 is a second pin 19 arranged parallel to the pin 18, the two pins 18 and 19 forming a pair of pins. The pair of pins is duplicated at each separation space between the sets of pins on the lower face of the pin-wheel.

On a suitable shaft 20, below the pin-wheel, is arranged a cam 21, having a slow pitch cam-rib 22, which is spiral for a portion of its length, and for the remainder of its length as at 23, Fig. 3, it is straight, or parallel with the side of the cam. This cam-rib is of a width, transversely, to fit easily between two of the pins 17. Its spiral portion pushing against the leading pin relatively to the direction of rotation of the pin-wheel advances the said pin-wheel a distance equal to the space between any two rows of holes in any single plate of the endless chain of plates, and by its proximity to the next following pin prevents any retrograde movement of the pin-wheel and endless chain. During the interval in which the straight portion of the cam-rib is between two pins there is no motion of the pin-wheel and endless chain, and it is in this interval that these parts are positively locked so as to insure the proper operation of sticking the last cut splints into the plate and the discharge of a row of finished matches. The spiral end 24 and the straight end 25 of the cam-rib extend beyond one another, or overlap, as clearly shown in Fig. 3, and they overlap a distance sufficient to insure the engagement of the spiral portion of the cam-rib with the next pin before the straight portion lets go of the pin last engaged, and hence there is never a time during the operation of the lower cam that the pin-wheel is not positively engaged by the said cam. This cam 21 by its engagement with the pins of the pin-wheel gives the regular step-by-step movement to the pin-wheel and endless chain hereinbefore referred to. The double or quickened motion necessary to move the endless chain twice the distance between the rows of holes in a like interval of time in order to advance the hinge-joints past the sticking and discharging stations, is imparted by the cam 26 located above the pin-wheel on a shaft 27. This cam 26 has a cam-rib 28 of quick pitch, and this cam-rib has a spiral portion terminating in a straight portion 29, and the ends 30 and 31, respectively, of these portions of the cam-rib overlap, as in the case with the lower cam, a distance sufficient to embrace the two pins 18 and 19 projecting from the upper face of the pin-wheel. As shown in Fig. 2, as the lower cam is releasing the last pin of a series of pins, the spiral portion of the cam-rib of the upper cam begins to engage the pin 18, in order to

effect the quickened motion referred to, and the parallel pin 19 is spaced apart from pin 18 a distance sufficient to admit the cam-rib and to prevent any retrograde motion or back-lash of the pin-wheel. As the upper cam revolves, its straight portion 29 remains between the two pins until the first of the pins of the next set of pins on the lower face of the pin-wheel is engaged by the lower cam, and, consequently, the pin-wheel is never free from engagement with one or the other of the cam-ribs throughout its entire cycle of movement, and the result is as already sufficiently indicated, that the pin-wheel and the endless chain receive a steady advance movement without possibility of any retrograde movement or back-lash both throughout the regular step-by-step movement and the quickened movement, and, moreover, this pin-wheel is positively locked during the periods of rest that are required for the sticking of the splints into the plates and the discharge of the matches from such plates. In consequence of this provision for the constant engagement of the pin-wheel by means of the cams, the endless chain is moved smoothly and without jerking, and moreover, high speed may be attained in the machine and an increased output of matches insured.

In Fig. 1 the bevel wheel 12 is broken out to expose the pinion 10, and the pinion 10 is broken out to expose the mutilated gear-wheel $6^{\times}$ which engages the teeth of the rack on the endless chain near the station where the matches are ejected. It will be understood that the mutilated gear-wheels 6 and $6^{\times}$ are duplicated on opposite sides of the machine.

The main shaft is indicated at 32 and on it is a band or other wheel 33, and the shafts 32 and 20 are geared or otherwise operatively connected in any usual or approved manner.

What we claim is:—

1. In a match-making machine, having an endless chain of carrier plates and means to impart to said chain a regular step-by-step movement interrupted at intervals by accelerated movement, a pin-wheel having a series of pins on its lower face and a slow pitch cam engaging the same, and pairs of pins on its upper face equal in number to the number of series of pins on the lower face, and a quick pitch cam engaging said pins on the upper face, whereby the pin-wheel is always positively held against back-lash by one or the other cam.

2. In a match-making machine, having an endless chain of carrier plates and means to impart to said chain a regular step-by-step movement interrupted at intervals by accelerated movement, a pin-wheel having a series of pins on its lower face and a slow pitch cam engaging the same, and pairs of pins on its upper face equal in number to the number of series of pins on the lower face, and a quick pitch cam engaging said pins on the upper face, the active surfaces of the said cams being cam-ribs each having a spiral portion and a straight portion, and these straight portions overlapping to the extent that no pin is released until the next pin is engaged in series.

In testimony whereof we have hereunto set our hands this 7th day of March A. D. 1908.

EDWIN J. YOUNG.
JAMES H. WEAVER.

Witnesses:
MARY WEAVER,
ETHEL G. KOSHT.