US00D713439S

(12) United States Design Patent

Zhang

(10) Patent No.: US D713,439 S
(45) Date of Patent: ** Sep. 16, 2014

(54) **CAMERA**

(71) Applicant: **Shenzhen AEE Technology Co., Ltd**, Guangdong (CN)

(72) Inventor: **Xianzhi Zhang**, Guangdong (CN)

(73) Assignee: **Shenzhen AEE Technology Co., Ltd**, Shenzhen (CN)

(**) Term: **14 Years**

(21) Appl. No.: **29/450,506**

(22) Filed: **Mar. 18, 2013**

(30) **Foreign Application Priority Data**

Oct. 24, 2012 (CN) 2012 3 0509317

(51) **LOC (10) Cl.** **16-01**

(52) **U.S. Cl.**
USPC **D16/210**; D16/208

(58) **Field of Classification Search**
CPC G03B 15/03; G03B 17/02; G03B 17/04; G03B 17/08; G03B 17/56; G03B 19/04; H04N 5/2251; H04N 5/2252; H04N 5/2253; H04N 5/2254
USPC D16/200, 202–208, 210, 218, 219, 242; 348/373–376; 396/535, 539–541
See application file for complete search history.

(56) **References Cited**

U.S. PATENT DOCUMENTS

D149,233	S	*	4/1948	Teague	D16/210
D167,577	S	*	8/1952	Lamb	D16/210
D182,201	S	*	2/1958	Richartz	D16/207
5,471,238	A	*	11/1995	Bae	348/98
D558,247	S	*	12/2007	Kim	D16/202
D647,936	S	*	11/2011	Tanifuji et al.	D16/202
D674,832	S	*	1/2013	Zhang	D16/202
D686,267	S	*	7/2013	Mihara et al.	D16/202
2013/0128104	A1	*	5/2013	Nunnink et al.	348/373

* cited by examiner

Primary Examiner — Adir Aronovich
Assistant Examiner — Ramzi Almatrahi

(57) **CLAIM**

The ornamental design for a camera, as shown and described.

DESCRIPTION

FIG. **1** is a front elevational view of a camera showing my new design;
FIG. **2** is a rear elevational view thereof;
FIG. **3** is a left side elevational view thereof;
FIG. **4** is a right side elevational view thereof;
FIG. **5** is a top plan view thereof;
FIG. **6** is a bottom plan view thereof; and,
FIG. **7** is a front and right perspective view thereof.

1 Claim, 7 Drawing Sheets

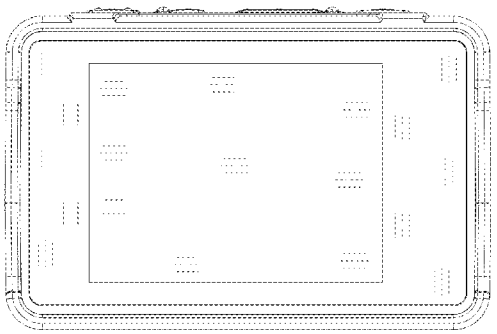

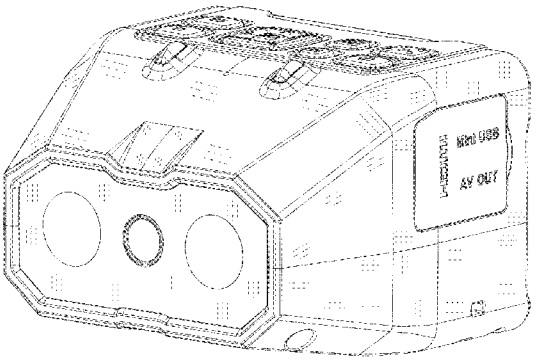

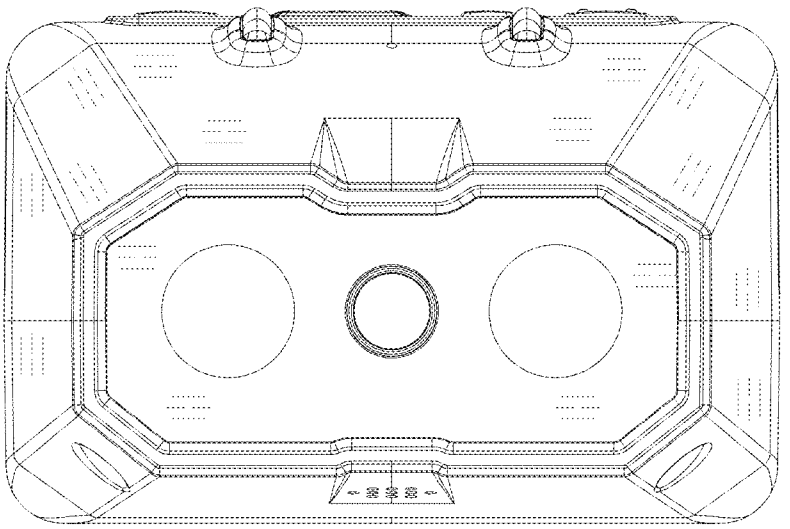

FIG. 1

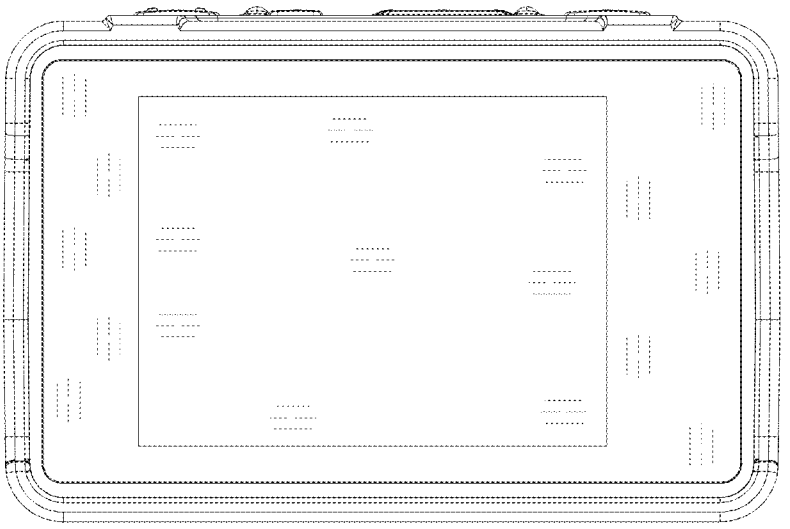

FIG. 2

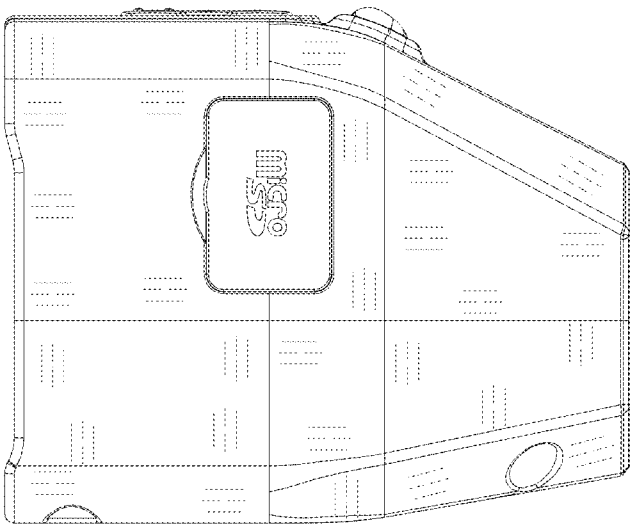

FIG. 3

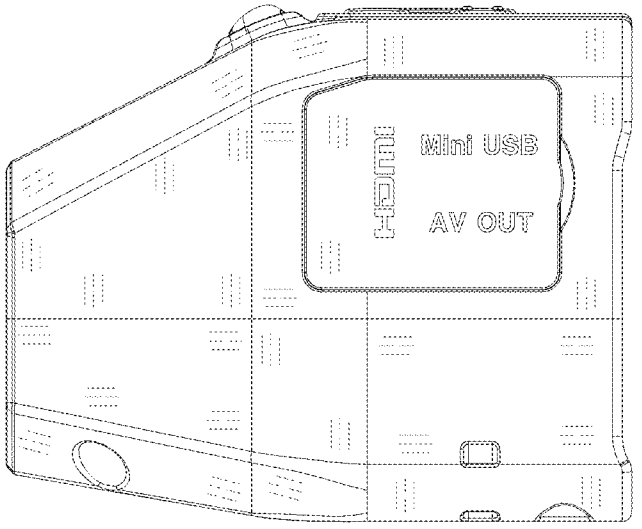

FIG. 4

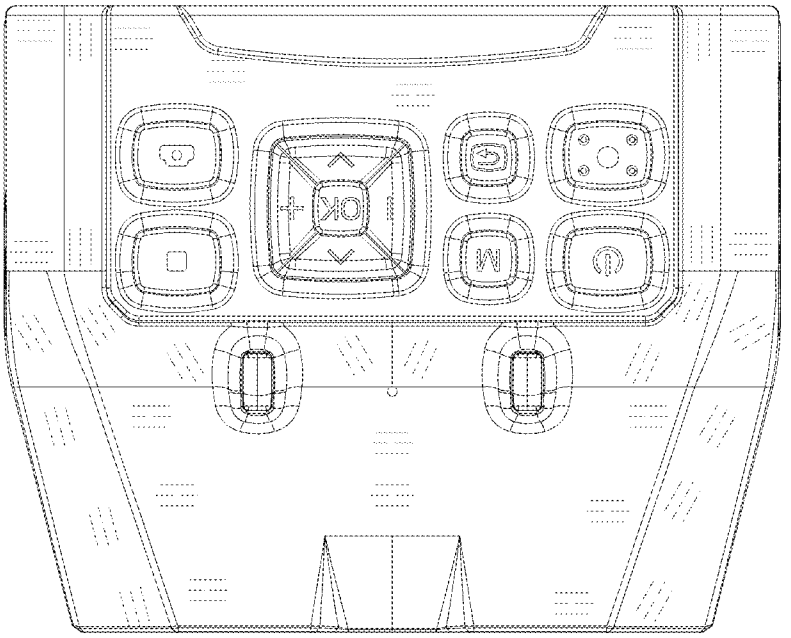

FIG. 5

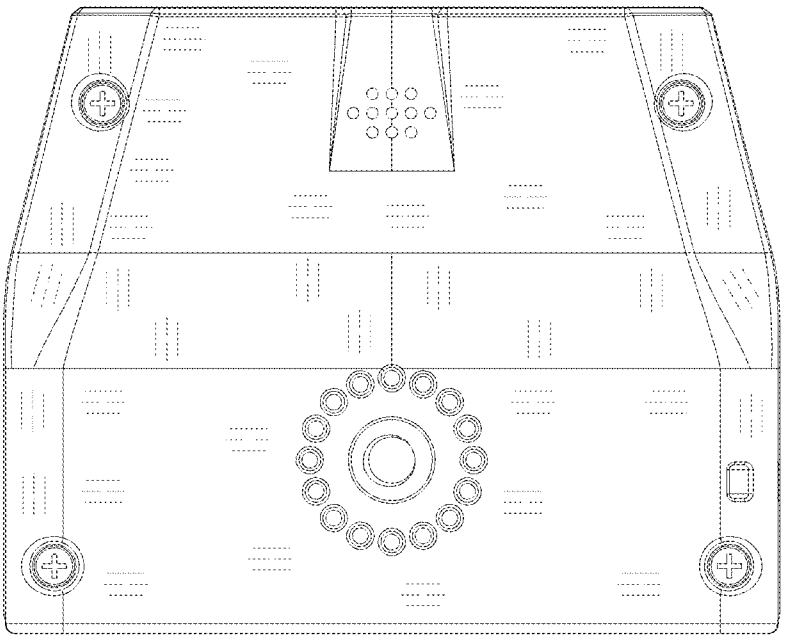

FIG. 6

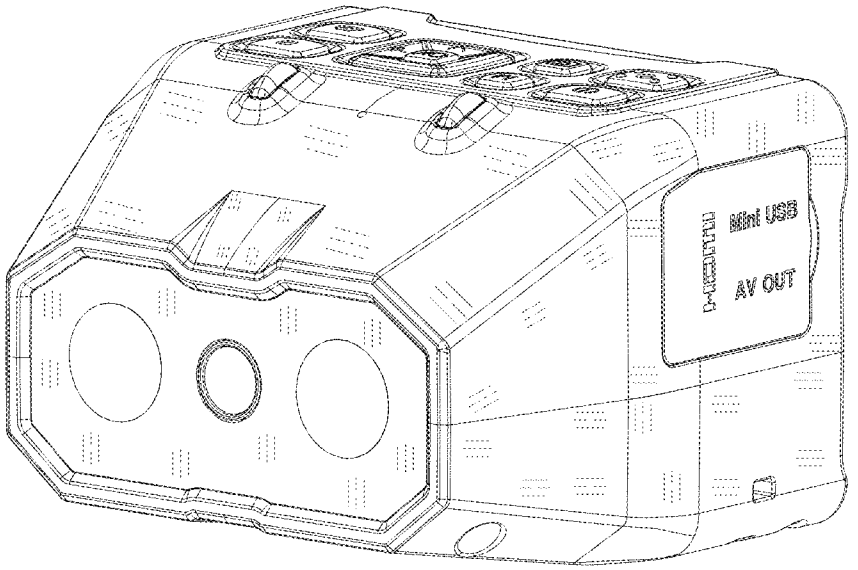

FIG. 7