(No Model.) 4 Sheets—Sheet 1.

M. DOWNEY, Jr.

LUMBER PILER.

No. 435,738. Patented Sept. 2, 1890.

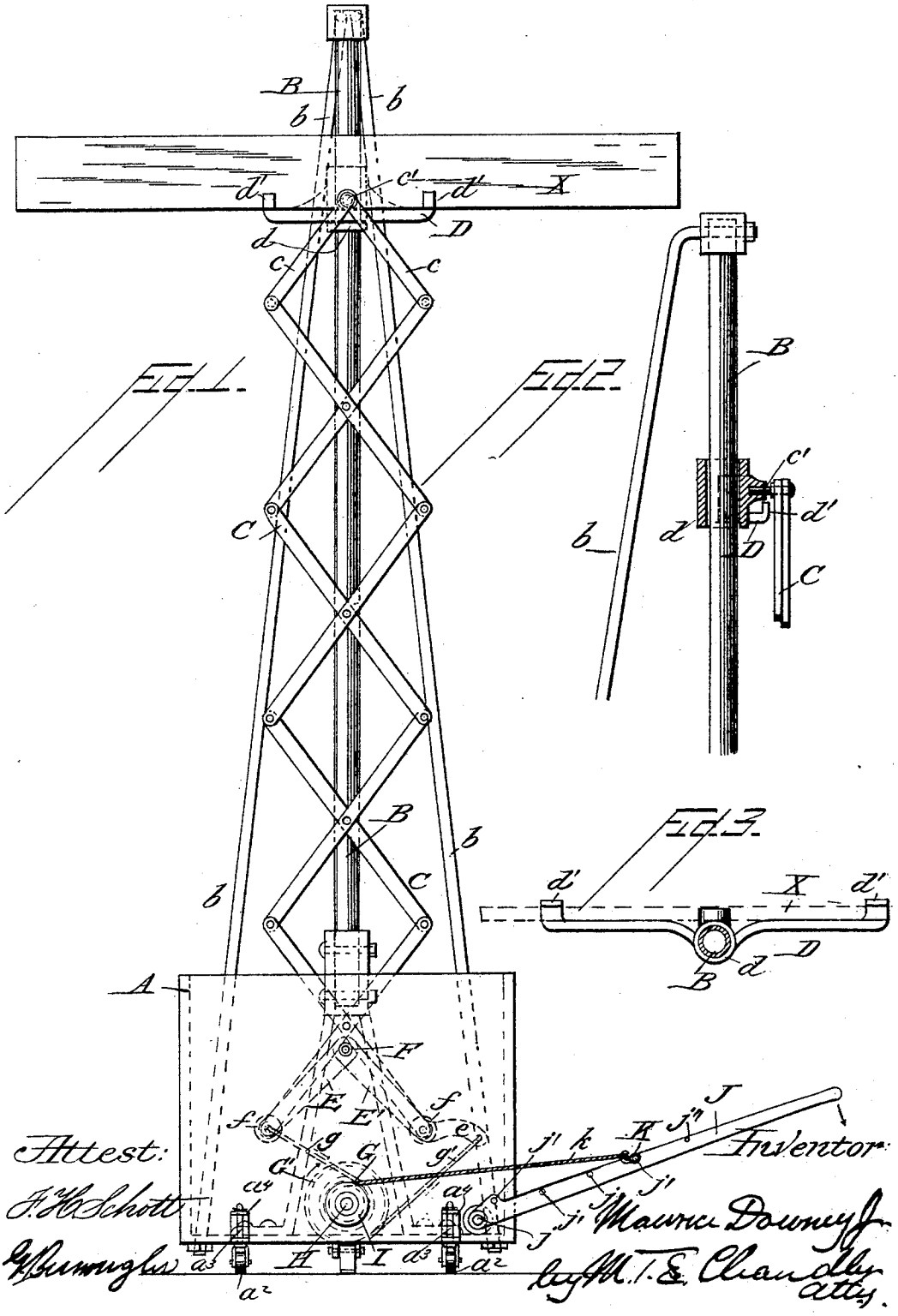

Attest:
F. H. Schott
G. Burroughs

Inventor
Maurice Downey Jr.
by M. T. & Chandlee
Attys.

THE NORRIS PETERS CO., PHOTO-LITHO., WASHINGTON, D. C.

(No Model.) 4 Sheets—Sheet 2.

M. DOWNEY, Jr.

LUMBER PILER.

No. 435,738. Patented Sept. 2, 1890.

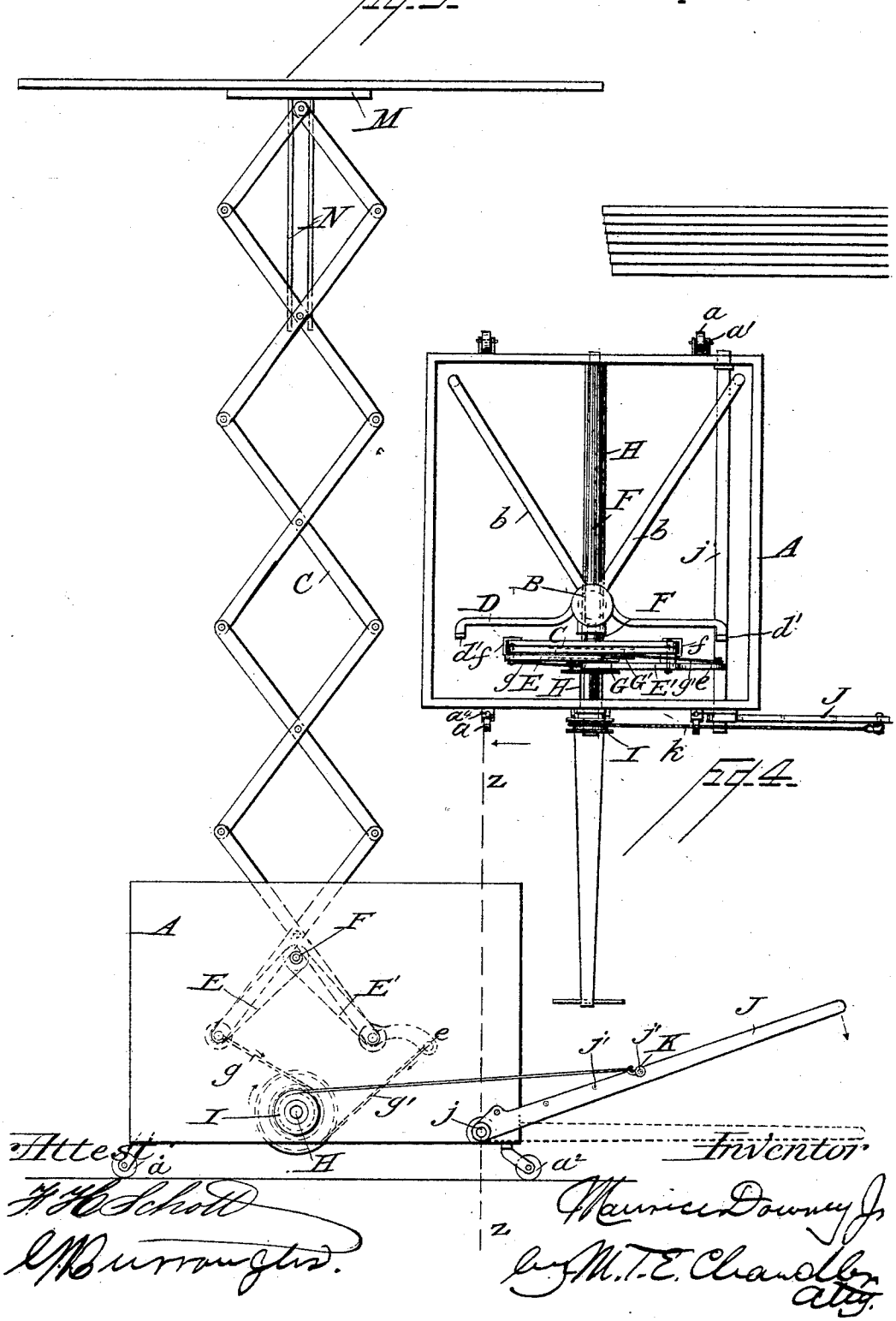

Attest:
F. H. Schott
C. Burroughs.

Inventor:
Maurice Downey Jr.
by M. T. E. Chandler
Atty.

THE NORRIS PETERS CO., PHOTO-LITHO., WASHINGTON, D. C.

(No Model.)

4 Sheets—Sheet 3.

M. DOWNEY, Jr.

LUMBER PILER.

No. 435,738. Patented Sept. 2, 1890.

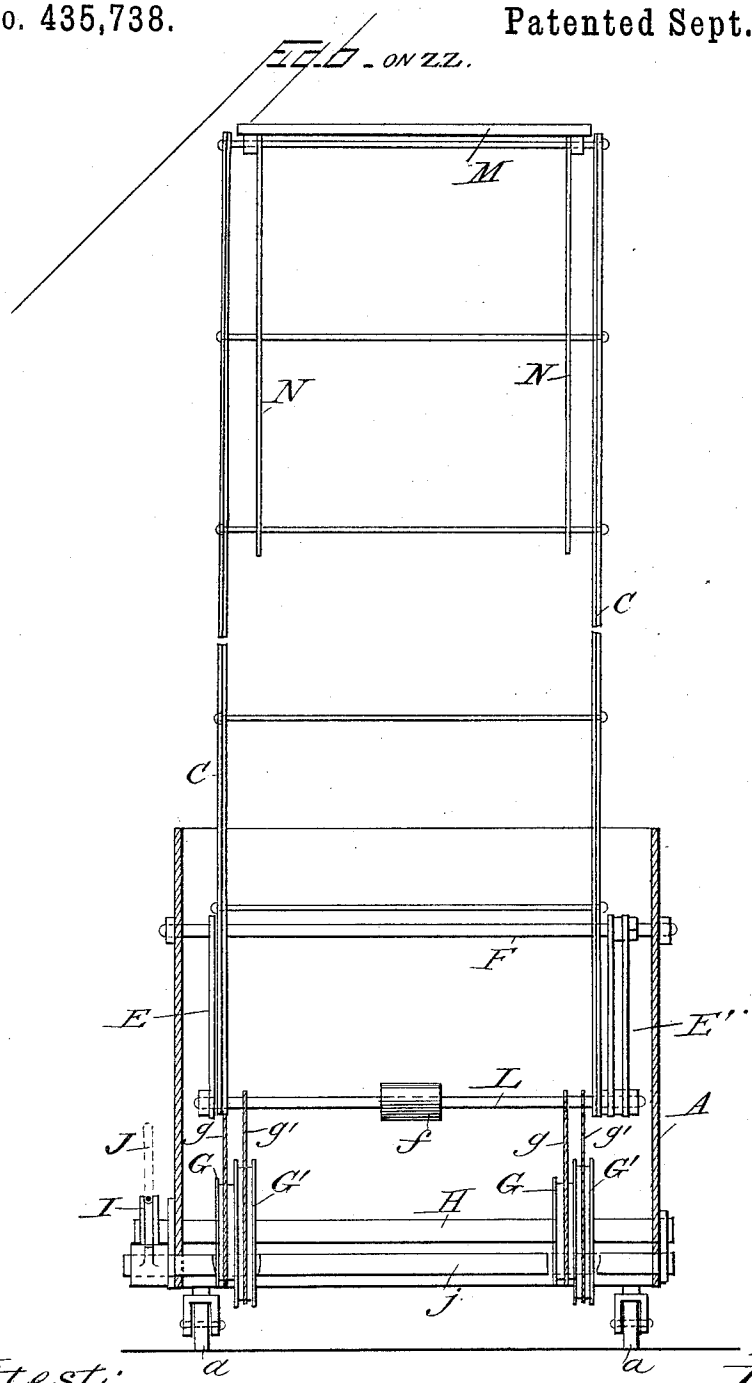

Attest:
P. H. Schott
A. Burroughs.

Inventor:
Maurice Downey Jr.
by M. T. E. Chandler
Atty

THE NORRIS PETERS CO., PHOTO-LITHO., WASHINGTON, D. C.

(No Model.) 4 Sheets—Sheet 4.

M. DOWNEY, Jr.

LUMBER PILER.

No. 435,738. Patented Sept. 2, 1890.

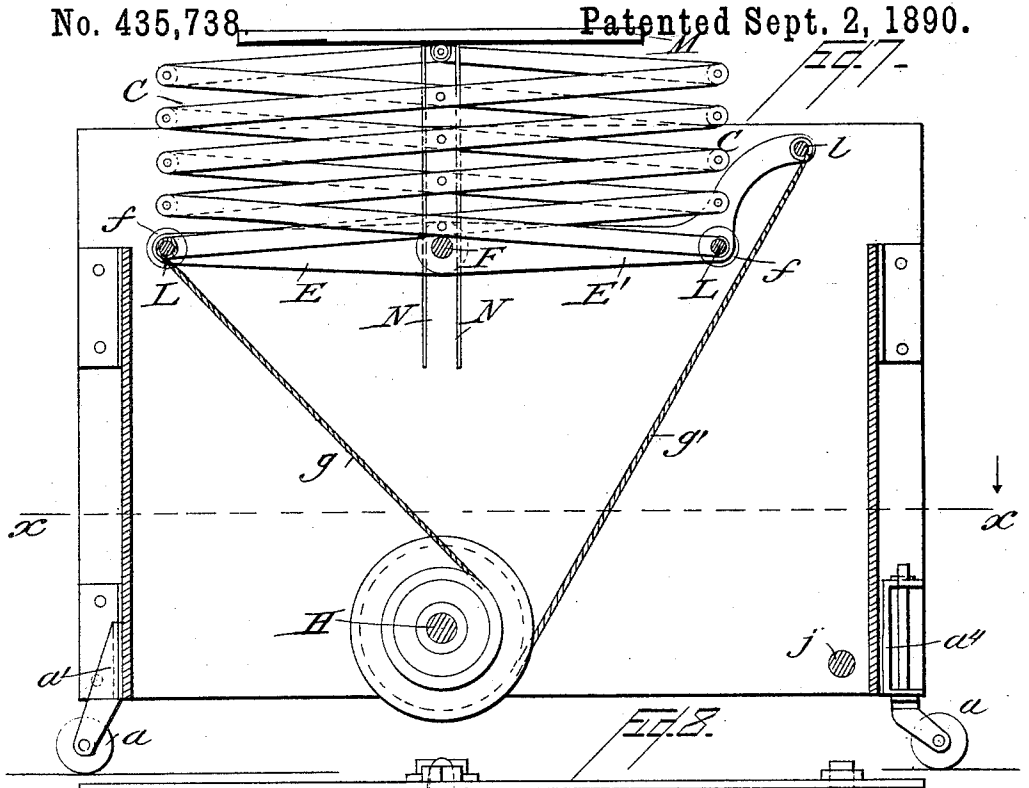

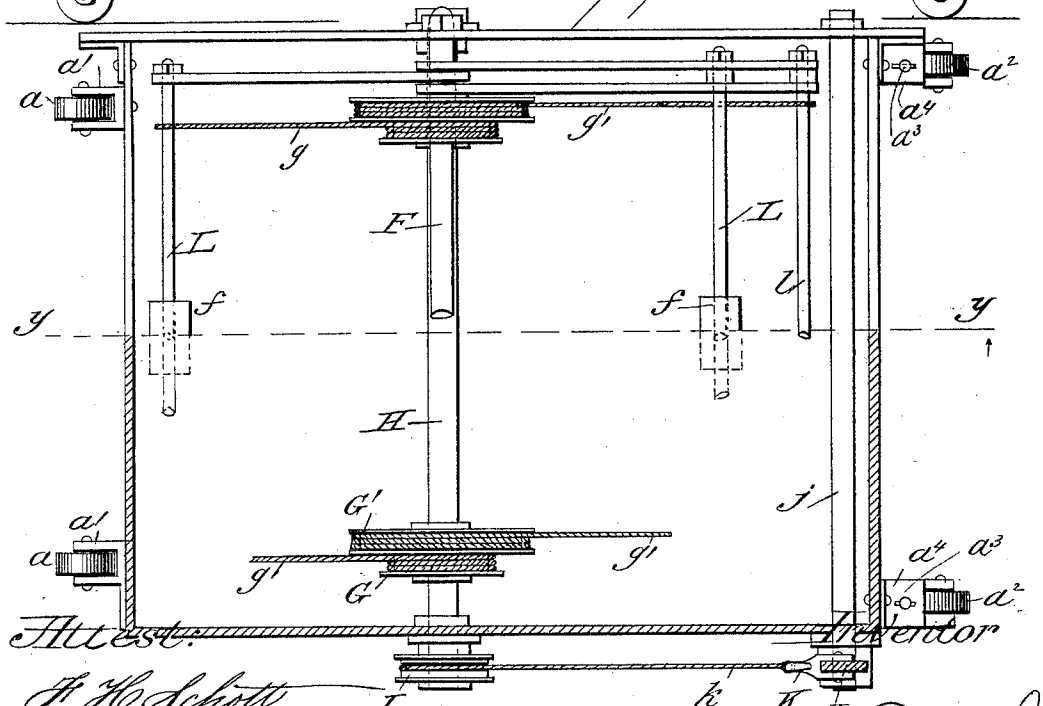

Attest:
F. H. Schott
W. Burroughs

Inventor
Maurice Downey Jr.
by M. T. E. Chandler Atty.

THE NORRIS PETERS CO., PHOTO-LITHO., WASHINGTON, D. C.

UNITED STATES PATENT OFFICE.

MAURICE DOWNEY, JR., OF MONTAGUE, MICHIGAN.

LUMBER-PILER.

SPECIFICATION forming part of Letters Patent No. 435,738, dated September 2, 1890.

Application filed January 11, 1890. Serial No. 336,690. (No model.)

To all whom it may concern:

Be it known that I, MAURICE DOWNEY, Jr., a citizen of the United States, residing at Montague, in the county of Muskegon and State of Michigan, have invented certain new and useful Improvements in Lumber-Pilers; and I declare the following to be a full, clear, and exact description of the invention, such as will enable others skilled in the art to which it appertains to make and use the same, reference being had to the accompanying drawings, and to the letters of reference marked thereon, which form a part of this specification.

The invention relates to improvements in machines to elevate lumber for the purpose of piling or stacking the same, the object being to provide means whereby the lumber may be raised quickly and with little labor to the desired height; and it consists in the construction and novel combination of parts hereinafter described, illustrated in the accompanying drawings, and pointed out in the claims hereto appended.

The particular kind of lumber which the invention is intended to elevate is planing or boarding, which by its means is quickly and easily built into the piles in which the same is stored in lumber-yards.

In the accompanying drawings, in which similar letters of reference designate corresponding parts, Figure 1 represents an end elevation of a lumber-piler embodying the invention. Fig. 2 is a detail view of the mast and supporting-bar partly in section. Fig. 3 is a plan view of the supporting-bar. Fig. 4 is a plan view of the invention. Fig. 5 represents a side view of a modification of the machine. Fig. 6 is a view of the same, partly sectional, on the line $z\ z$ of Fig. 4. Fig. 7 represents a central vertical section of said modification cut from front to rear. Fig. 8 is a plan view thereof, one-half being in section on the line $x\ x$ of Fig. 7.

Referring to the drawings by letter, A designates the supporting-carriage of the machine, rectangular in shape, having a suitable tongue attached to its front and supported at its corners upon the caster-wheels. The caster-wheels $a\ a$ at the rear corners of the carriage are journaled in bifurcated brackets a', rigidly secured to the carriage, while the caster-wheels $a^2\ a^2$ at the front corners of the carriage are journaled in the bifurcated lower ends of short vertical shafts $a^3\ a^3$, journaled in the upper and lower horizontal plates of brackets $a^4\ a^4$, rigidly secured to the carriage, a circumferential shoulder on each of said shafts bearing against the lower surface of the lower plate of the bracket, while a pin passes through a perforation in said shaft above the upper plate to prevent the shaft from falling out of place. By means of these front caster-wheels, which can turn with their shafts laterally, the carriage can be easily turned to one side or the other.

B designates a vertical mast rising to a suitable height from the floor of the carriage, a short distance from the front thereof, and b b are brace-bars secured at their upper ends to a cap fitted upon the top of said mast, and extending thence to the respective rear corners of the carriage-floor, to which they are secured.

C designates a pair of lazy-tongs in front of the mast, composed of centrally-pivoted crossing-levers in the usual manner, but with the highest pair c of said levers having only lower arms connected at their upper ends by the pivotal pin or bolt c', as shown.

D is a transverse supporting-bar, preferably of cast metal, and having a central vertical sleeve d, mounted and adapted to slide on the mast B, and provided with a bearing on its front, in which the adjacent projecting end of the bolt c' is journaled or swiveled in such a manner that it cannot escape from its bearings. The ends of the supporting-bar are bent frontward horizontally at right angles for a short distance, and are then bent vertically upward to form the fingers $d'\ d'$, between which and the front of the sleeve d a plank X or similar piece of lumber can be inserted and securely held edgewise, as shown in Fig. 1. The lower ends of the lowest pair of levers of the lazy-tongs are pivoted to the oppositely-inclined levers E E′, respectively, at or near the lower ends thereof, the upper ends of said levers being pivoted on a transverse shaft F journaled in bearings secured to or formed upon the sides of the carriage.

$f\ f$ are counterbalancing-weights attached

to the lower ends of the lowest pair of the levers of the lazy-tongs, which weights render the extension of the lazy-tongs less laborious and cause them to close without jar.

H is a transverse shaft having its ends journaled in bearings secured to or formed in the sides of the carriage a suitable distance below the lazy-tongs and levers E E′, and having fixed upon it the adjoining pulleys G G′, of different diameters, which pulleys are prevented from shifting laterally by suitable collars firmly secured upon the said shaft on each side of the said pulleys, which are preferably integral. The said pulleys are pivoted with outstanding flanges on each side. The pulley G, of less diameter, is connected by a rope *g* with the lower end of the lever E, which extends no farther outward than the lazy-tongs lever to which it is attached, and the pulley G′, of larger diameter, is connected by the rope *g′* to the end of an extension *e* of the lever E′ outward from the lower end of the corresponding lazy-tongs lever, the said ropes being wound in the same direction on the respective pulleys. The extension *e* causes the lever E′ to be sufficiently longer than the lever E to compensate for the greater diameter of the pulley G′, so that when the ropes are wound on their respective pulleys the said levers will pass over equal angular distances, though the end of the lever E′ will travel farther than the end of the lever E. Chains may be substituted for the ropes *g g′*, and chain-wheels for the pulleys G G′.

Upon one end of the shaft H, extended outside of the bearings, is secured the pulley I, having outstanding flanges on each side, which pulley is prevented from shifting laterally by collars fixed on the said shaft on each side thereof.

J is a lever-handle, having its lower end attached to the outwardly-extended end of a transverse shaft *j*, journaled in bearings on the sides of the carriage and provided with a longitudinal series of adjusting openings *j′ j′*, and K is a hook the bifurcated eye of which may straddle the edge of said lever and be engaged over one of said openings by a suitable pivotal pin, as shown.

k is a rope, having its inner end secured to the rim of the pulley I and its outer end looped or otherwise attached to the hook K. When the lever is depressed, the rope *k* unwinds from the pulley I, and thereby winds the ropes *g g′* on the pulleys G G′, drawing together the levers E E′, and thereby extending the lazy-tongs. By attaching the hook K in openings *j′* nearer the outer end of the lever-handle J the lazy-tongs will be farther extended for the same angular distance of travel of said lever-handle.

In operation, a person on the ground who operates the lever-handle places the planks on the supporting-bar and extends the lazy-tongs, while a person on the pile removes the planks and adds them to the pile.

In the modification shown in Figs. 5, 6, 7, and 8 the mast is dispensed with and two pairs of lazy-tongs are used, one on each side of the carriage. There are two sets of pulleys G G′, mounted on the shaft H, two sets of levers E E′, and consequently two sets of ropes *g g′*, connecting said levers with the corresponding pulleys; also, the ends of the lower arms of the lowest set of cross-levers of the opposite lazy-tongs are connected by transverse bars L, upon which the counterbalancing-weights *f f′* are centrally mounted. A similar bar *l* connects the lower ends of the two levers E′. By means of the said rods L *l* the simultaneous and equal action of the lazy-tongs on each side is secured, and they will also be braced by said rods. The highest connecting pivotal bolt of the lazy-tongs may have a supporting-platform or board M attached thereto upon which to rest the planks to be raised, or a modification of the described supporting-bar without the central sleeve may be attached to said bolt.

N N are guide-bars secured to and depending from the highest pivotal bolt of the opposite lazy-tongs. The said bars are bifurcated and ride upon a certain number of pivotal bolts below the highest, thereby preventing the upper parts of the lazy-tongs from inclining frontward or backward under the weight of the planks being raised.

Having thus described my invention, what I claim, and desire to secure by Letters Patent, is—

1. The combination, with the lazy-tongs and a support attached to the top thereof, of a transverse shaft journaled in the sides of the carriage, the opposite levers of unequal length having their upper ends pivoted on said shaft and then pivoted to the lower arms of the lowest cross-levers of the lazy-tongs at or near their lower ends, another transverse shaft journaled in the sides of the carriage a sufficient distance below the lever-shaft, the pulleys of unequal diameter mounted on said lower shaft, the ropes connecting the lower ends of the levers with the corresponding pulleys, the pulley mounted on the extended end of the lower transverse shaft, the pivoted lever-handle, and the rope connecting said lever-handle and the pulley on the extended end of the lower transverse shaft, substantially as specified.

2. The combination of the carriage, the mast rising therefrom, the lazy-tongs adjacent to the mast, the supporting-bar secured to the top of the lazy-tongs and provided with a central sleeve mounted on the mast and having its ends bent outward and then upward to form supporting-fingers, and the mechanism, substantially as shown and described, whereby said lazy-tongs may be extended and closed, as specified.

3. The combination, with the carriage, the mast rising therefrom, the lazy-tongs and the supporting-bar secured to the top of the lazy-tongs, of the transverse shaft journaled in the sides of the carriage, the opposite levers of

unequal length pivoted at their upper ends on said shaft and at or near their lower ends to the ends of the lower arms of the lowest pair of cross-levers of the lazy-tongs, another transverse shaft journaled in the sides of the carriage below the lever-shaft, the two pulleys of unequal diameter mounted on said lower shaft, the ropes connecting the lower ends of the corresponding levers with said pulleys, the longer and shorter levers being so connected with the pulleys of greater and less diameters, the pivoted lever-handle, and the rope connecting the said handle with a pulley on the extended end of the pulley-bearing shaft, substantially as specified.

4. The combination, with the carriage, the mast rising therefrom, the lazy-tongs adjacent to the mast, and the supporting-bar having a central sleeve mounted on the mast and attached to the top of the lazy-tongs, of the counterbalancing-weights attached to the lowest arms of the lowest pair of cross-levers of the lazy-tongs, and mechanism, substantially as described, whereby said lazy-tongs can be extended and closed, substantially as specified.

5. The combination, with the carriage, the mast rising therefrom, the lazy-tongs, and the supporting-bar attached to the lazy-tongs and having a sleeve mounted on the mast, of the counterbalancing-weights on the lower ends of the lazy-tongs, the levers connected to said lower ends, the pulleys connected to said levers by ropes, the lever-handle provided with a longitudinal series of adjusting openings, and the rope arranged to have its outer end attached to any one of said openings and its inner end attached to a pulley on the pulley-bearing shaft, substantially as shown and described.

In testimony whereof I affix my signature in presence of two witnesses.

MAURICE DOWNEY, JR.

Witnesses:
FRANK BRACELIN,
RICHARD DOWNEY.