(12) INTERNATIONAL APPLICATION PUBLISHED UNDER THE PATENT COOPERATION TREATY (PCT)

(19) World Intellectual Property Organization
International Bureau

(43) International Publication Date
17 September 2015 (17.09.2015)

WIPO | PCT

(10) International Publication Number
WO 2015/136279 A1

(51) International Patent Classification:
B66F 9/12 (2006.01) *B66C 1/22* (2006.01)

(21) International Application Number:
PCT/GB2015/050708

(22) International Filing Date:
11 March 2015 (11.03.2015)

(25) Filing Language: English

(26) Publication Language: English

(30) Priority Data:
1404259.2 11 March 2014 (11.03.2014) GB

(71) Applicant: **PILKINGTON GROUP LIMITED** [GB/GB]; European Technical Centre, Hall Lane, Lathom, Nr. Ormskirk, Lancashire L40 5UF (GB).

(72) Inventor: **BAMBER, Stephen**; 39 Barwell Avenue, Islands Brow, St Helens, Merseyside WA11 9HZ (GB).

(74) Agents: **STANLEY, Andrew Thomas** et al.; Pilkington Group Limited, Intellectual Property, Pilkington European Technical Centre, Hall Lane, Lathom, Ormskirk, Lancashire L40 5UF (GB).

(81) Designated States *(unless otherwise indicated, for every kind of national protection available)*: AE, AG, AL, AM, AO, AT, AU, AZ, BA, BB, BG, BH, BN, BR, BW, BY, BZ, CA, CH, CL, CN, CO, CR, CU, CZ, DE, DK, DM, DO, DZ, EC, EE, EG, ES, FI, GB, GD, GE, GH, GM, GT, HN, HR, HU, ID, IL, IN, IR, IS, JP, KE, KG, KN, KP, KR, KZ, LA, LC, LK, LR, LS, LU, LY, MA, MD, ME, MG, MK, MN, MW, MX, MY, MZ, NA, NG, NI, NO, NZ, OM, PA, PE, PG, PH, PL, PT, QA, RO, RS, RU, RW, SA, SC, SD, SE, SG, SK, SL, SM, ST, SV, SY, TH, TJ, TM, TN, TR, TT, TZ, UA, UG, US, UZ, VC, VN, ZA, ZM, ZW.

(84) Designated States *(unless otherwise indicated, for every kind of regional protection available)*: ARIPO (BW, GH, GM, KE, LR, LS, MW, MZ, NA, RW, SD, SL, ST, SZ, TZ, UG, ZM, ZW), Eurasian (AM, AZ, BY, KG, KZ, RU, TJ, TM), European (AL, AT, BE, BG, CH, CY, CZ, DE, DK, EE, ES, FI, FR, GB, GR, HR, HU, IE, IS, IT, LT, LU, LV, MC, MK, MT, NL, NO, PL, PT, RO, RS, SE, SI, SK, SM, TR), OAPI (BF, BJ, CF, CG, CI, CM, GA, GN, GQ, GW, KM, ML, MR, NE, SN, TD, TG).

Published:

— *with international search report (Art. 21(3))*

(54) Title: LIFTING APPARATUS

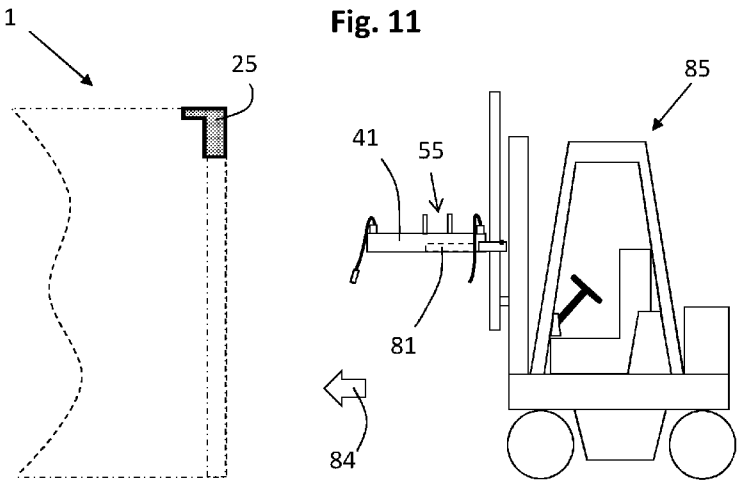

Fig. 11

(57) Abstract: Apparatus for attaching to a lifting device, the lifting device being suitable for lifting a removable door header of an open-top container, is described. The apparatus comprises means for attaching the apparatus to the lifting device, a base for supporting the removable door header and slot means for defining a slot into which the removable door header fits. A method of removing a removable door header from a container, in particular an open-top container, using the apparatus is also described.

WO 2015/136279 A1

LIFTING APPARATUS

The present invention relates to an apparatus that may be attached to a forklift truck to aid the removal and replacement of a removable door header from an open-top container.

There are a variety of shipping containers currently in use for transporting heavy loads. Examples of such containers are well known and are commercially available from many companies, for example Hapag-Lloyd AG of Ballindamm 25, 20095 Hamburg, Germany.

One type of shipping container is known as an open-top container because the top of the container is open and may be covered with a removable tarpaulin. Open-top containers generally have a removable door header (also known in the art as a "container lintel") to provide additional rigidity to the container during transport.

The ends of the removable door header usually sit on upper portions of the container walls that form the container door opening. The removable door header is secured to the upper portions of the walls with pins to ensure door header remains in place during transit.

To remove the door header one of the pins is removed and the door header swung outwards. With the door header in the swung-out position it is easier to load and unload the open-top container. When the door header is in the swung-out position, essentially all of the weight of the door header is transferred to the pivot pin.

One problem with such removable door headers is that it is possible for one of the pins about which the door header rotates to become bent, with the possibility of the pin failing. The result is that the door header, which is typically over 25kg, may fall from height and cause serious injury.

Another problem is that one of the securing pins may become damaged in transit. Whilst the door header may still able to remain in position during transit, if a securing pin fails this causes a problem when removing the door header. It is possible for the door header to fall from the upper portions of the container wall because the pin that should be present to act as a pivot about which the door header can rotate has failed.

It is also possible that one of the securing pins may not have been inserted prior to transit. If a securing pin is missing and this goes unnoticed, the door header may fall from height due to the absence of a securing pin about which the door header is meant to rotate.

Given that the door header is an elongate steel member and weighs many ten's of kg there is a risk of injury if the door header falls from height.

Attachments are commercially available that attach to the fork of a forklift truck. One such attachment is described at http://www.liftruck.co.uk/four-fork-attachment.htm and is said to have been designed to provide a method of lifting and moving unpalletised loads such as timber planks, sheet steel, tubing, pipes or concrete lintels safely and in turn minimising the potential of damage to products. This attachment is not specifically designed to lift a removable door header of an open-top container.

GB2107278A describes an adaptor for use with fork lift apparatus to enable a load to be suspended from the fork tines. An example load has a cylindrical form.

WO91/19648A2 describes a carrier for supporting goods. In one orientation the carrier can be used as a pallet where a first support plane is turned upwardly and an opposing second support plane is turned downwardly. If the first support plane is turned downwardly and the second support plane is turned upwardly the carrier can be used as a floor element. The elements forming the first support plane have a small thickness such that the use of the carrier in a cargo hold results in a loss of only little useful loading space.

US6,149,373 describes an apparatus for lifting and manipulation of bulk material containers having at least a pair of externally protruding lips or a peripheral rim.

DE202012002136 describes a device for transporting articles with a fork lift vehicle, the device having a rotation unit for receiving the articles.

GB2440326A describes a material handling apparatus for use with a fork lift, with examples given of apparatus for moving cylindrical pipes.

JP2010006495A describes a fitting for a forklift for transporting an electric wire-cable drum. The fitting has a U-shaped body with a flat bottom face mounted on an H-shaped body, where surfaces of the U-shaped body are cut into a V shape to form a V-shaped body.

As described previously, when an open-top container removable door header is removed from the open-top container there is much manual intervention to insert/remove the securing pins. As such there is work carried out at height increasing the potential for injury.

There exists a need for an apparatus that allows the door header of an open-top container to be removed safely.

Accordingly the present invention provides from a first aspect apparatus for attaching to a lifting device, the lifting device being suitable for lifting a removable door header of an open-top container, the apparatus comprising means for attaching the apparatus to the lifting device, a base for supporting the removable door header and slot means for defining a slot into which the removable door header fits.

Preferably the slot is configured to prevent the door header from toppling over when the removable door header is located in the slot.

Preferably the apparatus comprises securing means to secure the removable door header to the base. Preferably the securing means are releasably securable. Preferably the securing means comprises one or more strap. Preferably one of the one or more straps is a fast release strap. Preferably one of the one or more straps is a ratchet strap.

Preferably the securing means comprises a rotatable member configured to rotate between a first position for securing the door header to the base and a second position wherein the door header is not secured to the base. Preferably the rotatable member is mounted on a pivot extending from the base.

Preferably the slot means are integrally formed with the base.

Preferably the slot means comprise one or more elements extending upwards from the base and fixed thereto, preferably by welding or the like. Preferably the one or more elements extend upwards from the base by a distance sufficient to prevent the removable door header from toppling over when the removable door header is located in the slot.

Preferably the slots means are configured to define one or more portion of the slot.

Preferably the slot means comprises a first pair of members extending upwards from the base and a second pair of members extending upwards from the base, the first and second pairs of members being configured to define a first portion of the slot into which the removable door header fits. Preferably the slot means comprises a third pair of members extending upwards from the base and a forth pair of members extending upwards from the base, the third and forth pairs of members being configured to define a second portion of the slot into which the removable door header fits.

Preferably the slot has at least one wall portion perpendicular to the base.

Preferably the slot has a flat base portion. Preferably the slot has at least one wall portion perpendicular to the flat base portion of the slot.

Preferably the slot has two (a first and a second) spaced apart wall portions, sufficiently spaced such that the removable door header can fit between the first and second wall portions.

Preferably the or each wall portion of the slot is perpendicular to the base.

Preferably the slot has two (a first and a second) spaced apart wall portions and a flat base portion, wherein the first and second walls are sufficiently spaced such that the removable door header can fit between the first and second wall portions. Preferably the first and second wall portions of the slot are perpendicular to flat base portion of the slot.

Suitably the slot is not a V-shaped slot. Having a V-shaped slot makes it difficult to ensure the removable door header is in the correct alignment to be replaced back into the open-top container.

Preferably the apparatus comprises means for retaining the apparatus to the lifting device when the apparatus is used to remove the removable door header from the open-top container. The weight of the door header and the resistance to being removed from the upper portions of the container walls make it preferable to have retaining means to prevent the apparatus from being pulled off the lifting device when the door header is removed.

Preferably the attachment is suitable for moving a removable door header weighing between 10 kg and 100 kg.

Preferably the apparatus is configured not to be rotatable when attached to the lifting device.

Suitably when the removable door header is in the slot, the removable door header is able to be replaced back into the open-top container.

When the removable door header is positioned in an inserted position in the open-top container, the removable door header lies in a first plane. Suitably when the removable door header is in the slot, the removable door header lies in a second plane parallel to the first plane.

Preferably the lifting device is a forklift truck.

Preferably the lifting device is a crane, in particular a mobile crane or an overhead crane.

When the lifting device is a forklift truck, preferably the apparatus is attached to at least a portion of the fork of a forklift truck. Preferably the apparatus comprises retaining means extending from the base and configured to engage a portion of the fork of a forklift truck when the apparatus is used to remove the removable door header from the open-top container.

The present invention also provides from a second aspect a method of removing a removable door header from a container comprising the steps (a) providing an apparatus according to the first aspect of the present invention; (b) moving the apparatus with respect to the removable door header to locate the door header in the slot; and (c) removing one or both pins securing the removable door header to the container.

Preferably the method includes the step of securing the removable door header to the apparatus using a securing means. Preferably the door header is secured to the base before one or both pins securing the removable door header to the container are removed.

Using the method according to the second aspect of the present invention the removable door header can be safely removed from the container.

Suitably the container is an open-top container.

The invention will now be described with reference to the following figures (not to scale) in which,

Figure 1 is a schematic isometric representation of a conventional open-top container;

Figure 2 is a front view of the container shown in figure 1;

Figure 3 is a side view of the container shown in figure 1;

Figure 4 is a plan view of the container shown in figure 1;

Figure 5 is a more detailed front view of the container shown in figure 1;

Figure 6 is an isometric representation of a removable door header;

Figure 7 is a schematic representation of the container shown in figure 1 where the removable door header is a position used when transporting the container;

Figure 8 a schematic representation of the container shown in figure 1 where the removable door header has been swung to an open position for loading/unloading the container;

Figure 9 is a plan view of an apparatus according to the present invention;

Figure 10 is a side view of the apparatus shown in figure 8;

Figure 11 is a side view of the apparatus of figure 8 shown attached to a forklift truck prior to removing a removable door header from an open-top container;

Figure 12 is a plan view of the apparatus of figure 8 shown attached to a forklift truck and located beneath a removable door header of an open top container;

Figure 13 is a plan view of the apparatus of figure 8 shown attached to a forklift truck and located beneath a removable door header of an open top container with the removable door header secured to the apparatus;

Figure 14 is a side view of the apparatus as shown in figure 13;

Figure 15 is a side view of the figure 12 with the fork of the forklift truck at a first position;

Figure 16 is a side view of figure 12 with the fork of the fork lift truck at a second position, higher than the first position shown in figure 14;

Figure 17 is a side view of another apparatus in accordance with the present invention; and

Figure 18 is a side view of another apparatus in accordance with the present invention.

Figure 1 shows an isometric schematic representation of a conventional open-top container. The open-top container 1 comprises a first side wall 3, a second side wall 5, an end wall 7, a first door 9a (shown in a closed position), a second door 9b (shown in an open position) and a base 11. The walls are typically made of corrugated steel. The base usually

has a wooden floor. The open-top container 1 may be loaded or unloaded through the open roof (i.e. in the direction of arrow 13) or through the open doors (i.e. in the direction of arrow 15). Typically the roof has removable bows and a removable tarpaulin.

Figure 2 shows a schematic front view of the open-top container 1 when viewed in the direction of arrow 15. The doors 9a, 9b are not shown for clarity. A typical open-top container has an internal height around 2.4m, as shown by arrow 19. Typically the internal width of an open-top container is around 2.4m, as shown by arrow 21.

Figure 3 shows a schematic side view of the open-top container 1 when viewed in the direction of arrow 17. A typical open-top container has an internal length of 5.9m, although the internal length may be 12m. The internal length is represented by arrow 23. Containers are typically available in twenty foot (20'), forty foot (40') and forty five foot (45') lengths.

Figure 4 shows a schematic plan view of the open-top container when viewed in the direction of arrow 13. The width 21 and length 23 are shown.

Depending upon the actual dimensions of the open-top container, the volume thereof is typically between $30m^3$ and $70m^3$ and has a maximum payload in excess of twenty eight tonnes (28,000 kg).

Figure 5 shows a more detailed schematic view of the open-top container 1 when viewed in the direction of arrow 15. Again the doors 9a, 9b are not shown for clarity. As is conventional in the art, the open-top container 1 has a removable door header 25. The removable door header 25 (often referred to as a container lintel) is supported on shoulder portions 27, 29 of respective side walls 3, 5. The removable door header 25 has two lug portions at either end, each lug portion having a hole therein. The lug portions are spaced such that a lug portion of the respective shoulder portion fits in the space, there being a hole in the lug portion of the shoulder portion. A pin may be located in the holes in the lug portions of the door header, the pin passing through the hole in the lug portion of the shoulder portion. Pin 31 is shown displaced and may be inserted into the hole 33a in the lug at the end of the removable door header 25, passing through hole 35 in the lug portion of the shoulder portion 27, and then passing through hole 33b in the other lug portion at the end of door header to engage therewith. The pin 37 is shown in the inserted position. During transit i.e. when the open-top container is transported between locations, each pin 31, 37 should be in the "inserted position" (or working position), that is as shown for pin 37 in figure 5.

Figure 6 shows a more detailed view of the removable door header 25. The door header 25 is essentially an elongate member having a length 25a, a height 25b and a width 25c. At one end there are two lug portions 26a and 26b. The lug portion 26a has hole 33a

therein. The lug portion 26b has hole 33b therein. The holes 33a, 33b align with the hole 35 in the lug portion of the shoulder portion 27. The holes 33a, 33b are for the securing pin 31. At the other end there are two lug portions 26c and 26d. The lug portion 26c has hole 34a therein. The lug portion 26d has hole 34b therein. The holes 34a, 34b align with the hole in the lug portion of the shoulder portion 29. The holes 34a, 34b are for the securing pin 37. The removable door header 25 is made of steel and weighs 50kg. The removable door header 25 has a ledge portion 25d that helps form a cover portion for the upper part of the container. As such when positioned on the floor in the orientation as shown in figure 6, the removable door header has a tendency to topple over i.e. the ledge portion 25d tends to fall downwards.

As is readily apparent from figures 5 and 6, when the removable door header 25 is in the inserted position, the removable door header essentially lies in a first plane, the first plane having a first axis and a second axis perpendicular to the first axis. The removable door header lies in the first plane such that the length 25a is parallel to the first axis of the first plane and the width 25c is parallel to the second axis of the first plane.

Figure 7 shows a schematic representation of the open-top container 1 with the removable door header 25 in position for transit i.e. in the inserted position.

With reference to figures 5, 6, 7 and 8 the removable the door header 25 is removed from the open-top container as follows. One of the pins 31, 37 is removed (typically manually), leaving the other in place. The removable door header 25 may then be swung outwards, as shown in figure 8. The removable door header 25 swings about the pin that is in the inserted position and this pin acts as a pivot i.e. by removing pin 31, pin 37 is the pivot and vice versa. The door header 25 is typically swung outwards using manual intervention.

A problem when removing the removable door header is that one of the pins 31, 37 may break when the door header is swung out i.e. in the position shown in figure 8. If the pin breaks the door header may fall with a risk of injury to persons.

Figure 9 shows a plan view of an apparatus suitable for attaching to a forklift truck or the like. Figure 10 shows a side view of the attachment shown in figure 9 as viewed in the direction of arrow 39.

With reference to figures 8 and 9, the apparatus 41 comprises a steel base 43 in the shape of a square ring. The size of the base is chosen so that the base fits on the fork of a fork lift truck. Typically the square ring has external dimensions of 50cm by 50cm. The steel ring is about 5cm thick. The steel ring has a first surface i.e. an upper facing surface and an opposing second surface i.e. a lower facing surface, the terms upper and lower being defined in relation to the orientation of the apparatus when attached to the fork of a forklift truck.

When attached to the fork of a forklift truck the lower surface faces the ground and the upper surface faces the opposite direction. Preferably the upper surface is flat.

Extending upwards from the upper surface of the steel base 43 are steel members 45, 47, 49 and 51. Each steel member is in the form of a rectangular block, the length of which extends from an outer edge of the steel base towards an inner edge of the steel base. Given that the steel base is a square ring having straight inner and outer edges, each rectangular steel member in the form of a rectangular block is at, or substantially at, 90° to the respective outer and inner edges.

Each steel member extends upwardly from the upper surface and is perpendicular thereto.

Steel members 45 and 47 are sufficiently spaced to define a slot 53 to accommodate the width of a removable door header. Steel members 49 and 51 are sufficiently spaced to define a slot 55 to accommodate the width of a removable door header. Steel member 45 is collinear with steel member 49 and steel member 47 is collinear with steel member 51. Each steel member extends about 5cm upwards from the upper surface of the base 43.

It is preferred that the base in the region of slot 53 and/or 55 is flat such that the or each slot 53, 55 has a flat base portion.

Extending upwards from each corner region of the base 43 are mounts 57, 59, 61 and 63. Secured to mount 57 is one end of a nylon strap 65. Secured to mount 59 is one end of a nylon strap 67. Secured to mount 61 is one end of a nylon strap 69. Secured to mount 63 is one end of a nylon strap 71. At the free end of nylon strap 65 is a buckle 73. At the free end of nylon strap 71 is a buckle 75. The strap 67 is arranged to engage with buckle 73 and the strap 69 is arranged to engage with buckle 75.

In the configuration shown in figures 9 and 10, the straps 67, 69 are unbuckled.

In an alternative embodiment to that shown in figure 8, one or more of the steel members in the shape of a rectangular block may be replaced by one or more steel members that extend upwards from the upper surface of the steel base and are arranged to extend between an outer edge and an inner edge of the steel base. For example, the rectangular steel member 45 may be replaced by two steel members each in the form of a cube or cylinder. For example, when steel member 45 is replaced by two steel members each in the form of a cube, the cubes are configured to be collinear with steel member 49 and are sufficiently spaced from steel member 47 to provide slot 53.

The base 43 has a front facing portion 42 and a rear facing portion 44. When the apparatus is attached to the fork of a forklift truck, the rear facing portion faces the forklift

truck. Towards the rear of the apparatus and extending from one side of the base 43 is a first retaining support member 54. At one end the retaining support member 54 is rigidly fixed to the base 43. At the other end the retaining support member has a hole 54a into which a retaining member 58 can fit. Offset from the first retaining member support 54 is a second retaining member support 56. The second retaining member support 56 is rigidly fixed at one end to the base 43 and/or foot 79. The other end of the second retaining member support has a hole 56a (not shown) therein, aligned with the hole 54a in the first retaining support member 54.

The retaining member 58 has a straight steel shaft 58a and a handle portion 58b. There is a diametric hole 58c in the end of the shaft 58a opposite the end having the handle portion 58b. The shaft is sized to slide into the hole 54a and 56a in the direction of arrow 62 (the retaining member 58 shown in the retaining position in phantom). When the retaining member is in the retaining position a split pin 60 may be located in the hole 58c to keep the retaining member in the retaining position. The retaining member 58 is rotatable in the holes 54a, 56a.

Extending from the other side of the base 43 is a third retaining support member 64. At one end the retaining support member 64 is rigidly fixed to the base 43. At the other end the retaining support member 64 has a hole 64a (not shown) into which a retaining member 68 can fit. Offset from the first retaining member support 64 is a fourth retaining support member 66. The fourth retaining member support 66 is rigidly fixed at one end to the base 43 and/or foot 77. The other end of the fourth retaining member support has a hole 66a (not shown) therein, aligned with the hole 64a in the third retaining support member 64. The retaining member 68 is the same as the retaining member 58, that is it has a straight steel shaft 68a, a handle portion 68b and a diametric hole 68c in the end of the shaft 68a opposite the end having the handle portion 68b. The shaft 68a is sized to slide into the holes 64a and 66a. The retaining member 68 is shown in the retaining position. A split pin 70 is located in the hole 68c to keep the retaining member 68 in the retaining position. The retaining member 68 is rotatable in the holes 64a, 66a.

Because the apparatus 41 is symmetrical about an axis equidistant between the lateral edges of the apparatus (in the plan view shown), the retaining support member 64 is fixed on the side of the base opposite the side of the base on which the retaining support member 54 is fixed.

Located on the lower surface of the base 43 are elongate steel feet 77, 79 configured to be mounted to the fork 81 (only a portion of which is shown in figure 10) of a forklift truck

(not shown). The feet may be in the form of slots into which the fork of the forklift truck may engage, i.e. in the direction of arrow 83. Any suitable means of securing the apparatus 41 to the fork 81 of a forklift truck may be used. It is preferred that the apparatus 41 be releasably attached to the fork 81 of a forklift truck.

Before the apparatus 41 is attached to the fork 81, the retaining members 58, 68 are removed from the apparatus. The apparatus is then attached to the fork by means of the feet 77, 79. The fork has two upright portions 81a, 81b (only 81a is shown in figure 10), each fitting into the respective space between first and second retaining support members and third and fourth retaining support members. That is fork upright portion 81a fits in the space between first retaining support member 54 and second retaining support member 56. Fork upright portion 81b fits in the space between third retaining support member 64 and fourth retaining support member 66.

When the fork upright portions 81a, 81b are located in the respective space between the first and second retaining support members and the third and fourth retaining support members, the respective retaining members 58, 68 are inserted into holes 54a, 56a and 64a, 64a. Each split pin 60, 68 is inserted into the respective hole 58c, 68c. In this position the retaining members 58, 68 are able to retain the apparatus on the fork when a door header is removed from an open-top container.

The apparatus is used as follows. With reference to figure 11, a forklift truck 85 is shown with the apparatus 41 as described with reference figures 9 and 10 attached to the fork 81. The retaining members 58, 68 are in the retaining position to retain the apparatus 41 on the fork 81 when the removable door header is removed.

A portion of an open-top container 1 is shown and is of the type described with reference to figures 1-7. The removable door header 25 is shown as shaded for clarity and is of the type shown in figure 6.

The forklift truck 85 moves towards the open-top container 1 in the direction of arrow 84 until the apparatus 41 is beneath the removable door header 25. This is shown in plan view in figure 12. The fork is raised so that the removable door header slots into the channels 53, 55 of the apparatus 41.

When the removable door header is located in the slot defined by slots 53, 55 the steel members 45, 47, 49, 51 extend upwards from the base by a sufficient amount such that the removable door header is not able to topple over.

When the lower surface of the removable door header 25 contacts the upper surface of the base 43, and with the removable door header being located in the slots 53 and 55, strap 67

can be engaged with buckle 73 and tightened, thereby securing the removable door header 25 to the apparatus 41. Similarly, strap 69 can be engaged with buckle 75 and tightened. The straps in the buckled configuration are shown in figure 13. A side view of the apparatus in figure 13 (in the direction of arrow 87) with the removable door header 25 secured thereto is shown in figure 14. Because the apparatus 41 is symmetrical about an axis equidistant between the lateral edges of the apparatus (in the plan view shown), figure 14 also shows a view in the direction of arrow 88 of the apparatus 41 with the removable door header 25 secured thereto. In figure 14 the corresponding labels are shown in brackets for the view in the direction of arrow 88.

Either before or after the straps have been buckled, the pins securing the removable door header to the shoulder portions of the container walls at both ends of the removable door header 25 are removed so that the removable door header is no longer secured to the shoulder portions of the open-top container.

The removable door header 25 attached to the apparatus 41 is shown in figure 15. The forklift 85 may then be reversed away from the open-top container 1 i.e. in the direction of arrow 86. It is possible for there to be some resistance to the door header being removed because the lugs of the door header can be a tight fit between the lugs of the shoulder portions of the open-top container. The retaining members are in the retaining position so that the apparatus 41 is further retained on the fork 81 as the forklift moves in the direction of arrow 86.

The removable door header can then be removed from the open-top container and safely stored until it is required to replace, as shown in figure 16. As is readily apparent from figure 16 (and with reference to figure 6), when the removable door header is in the slot of the apparatus 41, the removable door header essentially lies in a second plane, the second plane having a first axis and a second axis perpendicular to the first axis. When the removable door header is in the slot of the apparatus 41, the removable door header lies in the second plane such that the length 25a of the removable header is parallel to the first axis of the second plane and the width of the removable header 25c is parallel to the second axis of the second plane. Suitably the second plane is parallel to the first plane as this makes it easier to replace the removable door header back into the open-top container. This may be achieved by having a straight walled slot having a flat base perpendicular to the slot wall or walls, the or each wall being straight.

To replace the removable door header, forklift truck is moved towards the doors of the open-top container. Since the removable door header in the slot of the apparatus 41 is in a

plane perpendicular to the first plane i.e. the plane in which the removable door header is located when the removable door header is in the inserted position, it is easier to replace the removable door header back in the open-top container. The removable header is then located on the shoulder portions of the container walls i.e. the lugs on the shoulder portions of the container walls 27, 29 are positioned between the lugs 26a, 26b and 26c, 2d respectively. The pins 31, 37 are inserted into holes in the lugs. The securing straps can then be unbuckled and the fork lowered.

Figure 17 shows a side view of another apparatus 141 in accordance with the present invention. The viewing direction is the same as that of the apparatus 41 shown in figure 10.

The apparatus 141 comprises a base 143 having an upwardly extending portion 144. In this particular example the portion 144 is integrally formed with the base although the extending portion may be a separate element that is suitably attached to the base by welding or the like.

The base 143 is attached to the fork 81 of a forklift truck (not shown). A removable door header 25 is supported on the base 143. The removable door header is of the form shown in figure 6. Due to the centre of gravity of the removable door header 25, there is a tendency for the removable door header to topple in the direction of arrow 145. However the portion 144 prevents the removable door header from toppling over.

In this example the slot only has one wall, the upwardly extending portion 144.

It is preferred that the base 143 is flat and the upwardly extending portion is perpendicular to the base. In the embodiment shown in figure 17 the upwardly extending portion 144 is a straight wall.

The apparatus 141 also has retaining support members and retaining members of the type described with reference to figures 9 and 10. Only first retaining support member 154 is shown in figure 17. The end of retaining support member 158 is shown. The retaining member 158 is able to act against upright portion 81a of the fork 81 when the door header is removed from the open-top container.

Figure 18 shows a side view of another apparatus 241 in accordance with the present invention. The viewing direction is the same as that of the apparatus 41 shown in figure 10.

In this variant there are two portions 244, 245 extending upwards from the base 243, the portions defining a slot into which the removable door header fits. Having two extending portions means it does not matter which way the removable door header has a tendency to topple because there is a support on either side. The portions 244, 245 may be integral with

the base i.e. the slot may be machined out of a suitable sized steel block. Again the apparatus 241 is shown attached to the fork 81 of a forklift truck (not shown).

The portion of the base 243 defining the base of the slot in which the removable door header is located is preferably flat, as shown in figure 18. It is preferred that the two portions 244, 245 are straight walls, having inner facing surfaces that are perpendicular to the base portion of the slot.

Again the apparatus 241 has retaining support members and retaining members as previously described with reference to figures 9 and 10. Only retaining support member 254 is shown. The end of retaining member 258 is shown.

For both the apparatus 141 and 241, when viewed in plan the respective base 143, 243 has a square shaped outer perimeter (as for the base 43 shown in figure 9). The base 143, 243 may have a rectangular outer perimeter. When the door header is supported on the base 143, 243, the length of the door header is such that the ends thereof extend beyond the edges of the base for example as shown for the apparatus 41 in figure 12.

Apparatus according to the present invention allows for the safe removal and replacement of a removable door header of an open-top container. The apparatus may be attached to other lifting devices, for example a crane, including a mobile crane and an overhead crane.

CLAIMS

1. Apparatus for attaching to a lifting device, the lifting device being suitable for lifting a removable door header of an open-top container, the apparatus comprising means for attaching the apparatus to the lifting device, a base for supporting the removable door header and slot means for defining a slot into which the removable door header fits.

2. Apparatus according to claim 1, wherein the slot is configured to prevent the door header from toppling over when the removable door header is located in the slot.

3. Apparatus according to claim 1 or claim 2, comprising securing means to secure the removable door header to the base.

4. Apparatus according to claim 3, wherein the securing means are releasably securable.

5. Apparatus according to claim 3 or claim 4, wherein the securing means comprises one or more strap, preferably a fast release strap.

6. Apparatus according to claim 5, wherein one of the one or more straps is a ratchet strap.

7. Apparatus according to claim 3 or claim 4, wherein the securing means comprises a rotatable member configured to rotate between a first position for securing the door header to the base and a second position wherein the door header is not secured to the base.

8. Apparatus according to any of the preceding claims, wherein the slot means are at least in part integrally formed with the base.

9. Apparatus according to any of the preceding claims, wherein the slot means comprises one or more elements extending upwards from the base.

10. Apparatus according to claim 9, wherein at least one or more of the one or more elements is fixed to the base.

11. Apparatus according to claim 9 or claim 10, wherein the one or more elements extend upwards from the base by a distance sufficient to prevent the removable door header from toppling over when the removable door header is positioned in the slot.

12. Apparatus according to any of the preceding claims, wherein the slots means are configured to define one or more portion of the slot.

13. Apparatus according to any of the preceding claims, wherein the slot means comprises a first pair of members extending upwards from the base and a second pair of members extending upwards from the base, the first and second pairs of members being configured to define a first portion of the slot into which the removable door header fits.

14. Apparatus according to claim 13, wherein the slot means comprises a third pair of members extending upwards from the base and a forth pair of members extending upwards from the base, the third and forth pairs of members being configured to define a second portion of the slot into which the removable door header fits.

15. Apparatus according to any of the preceding claims, wherein the slot has a flat base portion.

16. Apparatus according to claim 15, wherein the slot has at least one (a first) wall portion perpendicular to the flat base portion of the slot.

17. Apparatus according to any of the preceding claims, comprising means for retaining the apparatus to the lifting device when the apparatus is used to remove the removable door header from the open-top container.

18. Apparatus according to any of the preceding claims suitable for moving a removable door header weighing between 10 kg and 100 kg.

19. Apparatus according to any of the preceding claims, wherein the lifting device is a forklift truck or a crane.

20. A method of removing a removable door header from a container, in particular an open-top container, the method comprising the steps (a) providing an apparatus according to any of the preceding claims; (b) moving the apparatus with respect to the removable door header to locate the door header in the slot and (c) removing one or both pins securing the removable door header to the container, and an optional step of securing the removable door header to the apparatus using a securing means.

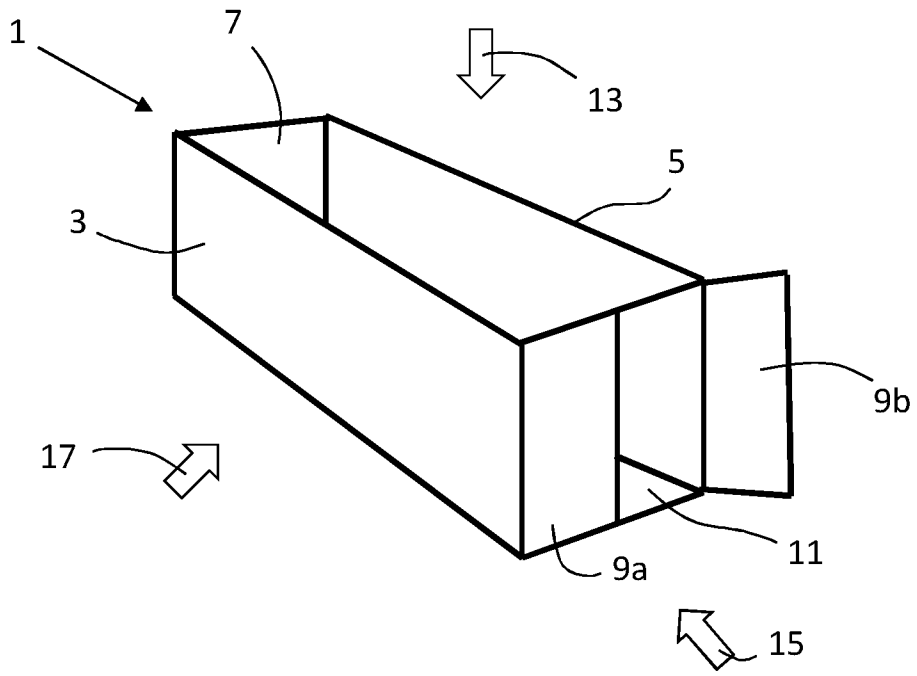

Fig. 1

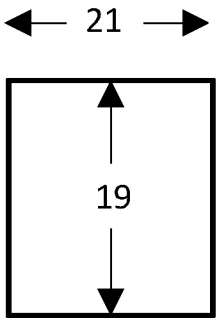

Fig. 2

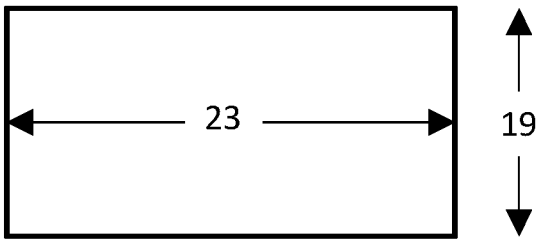

Fig. 3

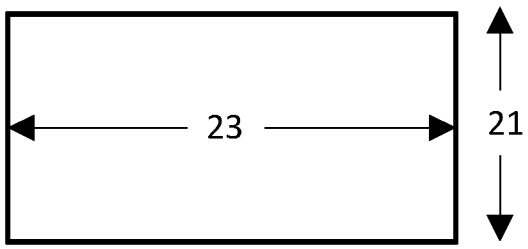

Fig. 4

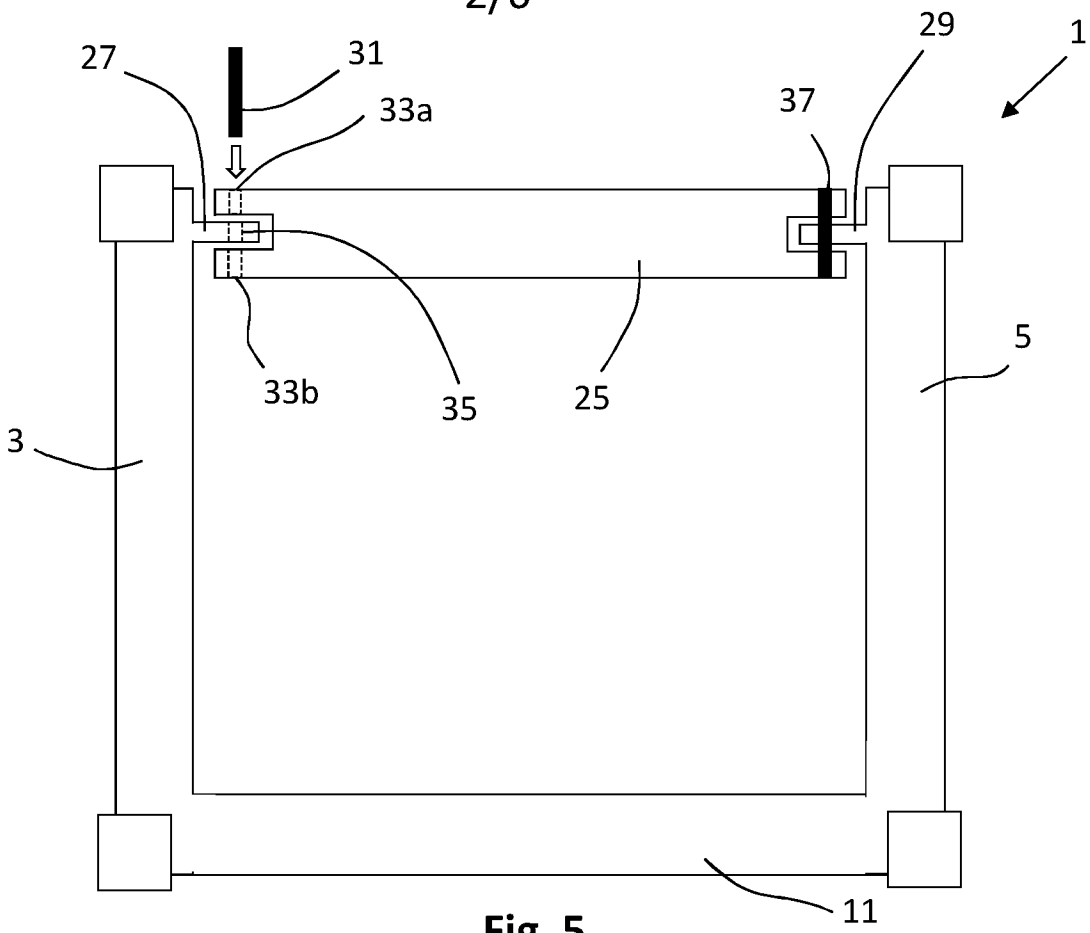

Fig. 5

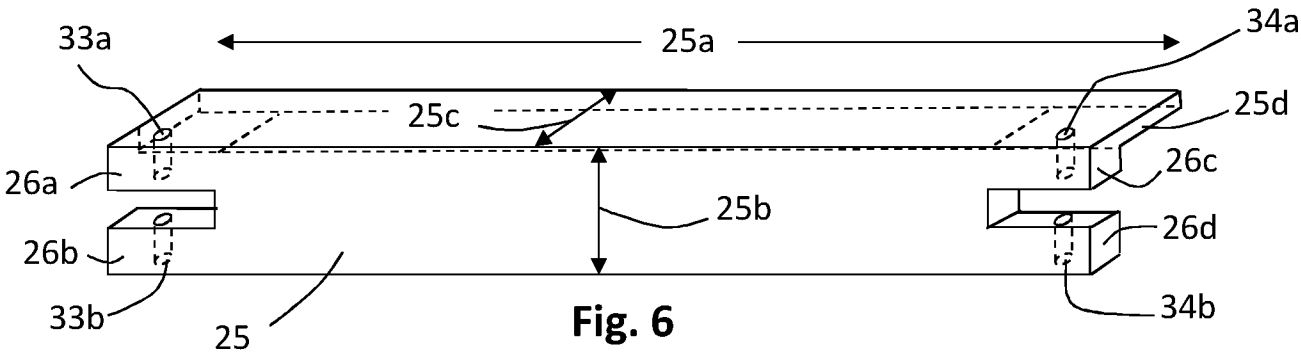

Fig. 6

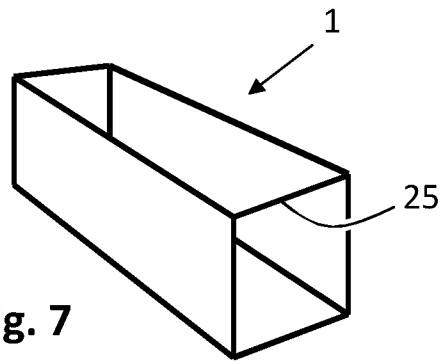

Fig. 7

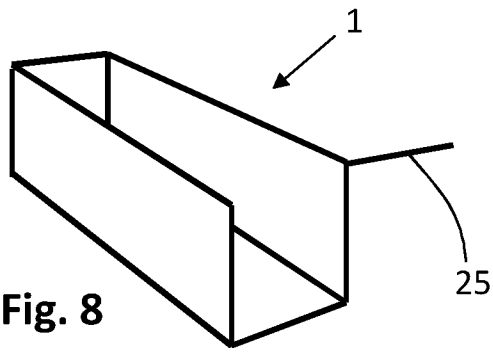

Fig. 8

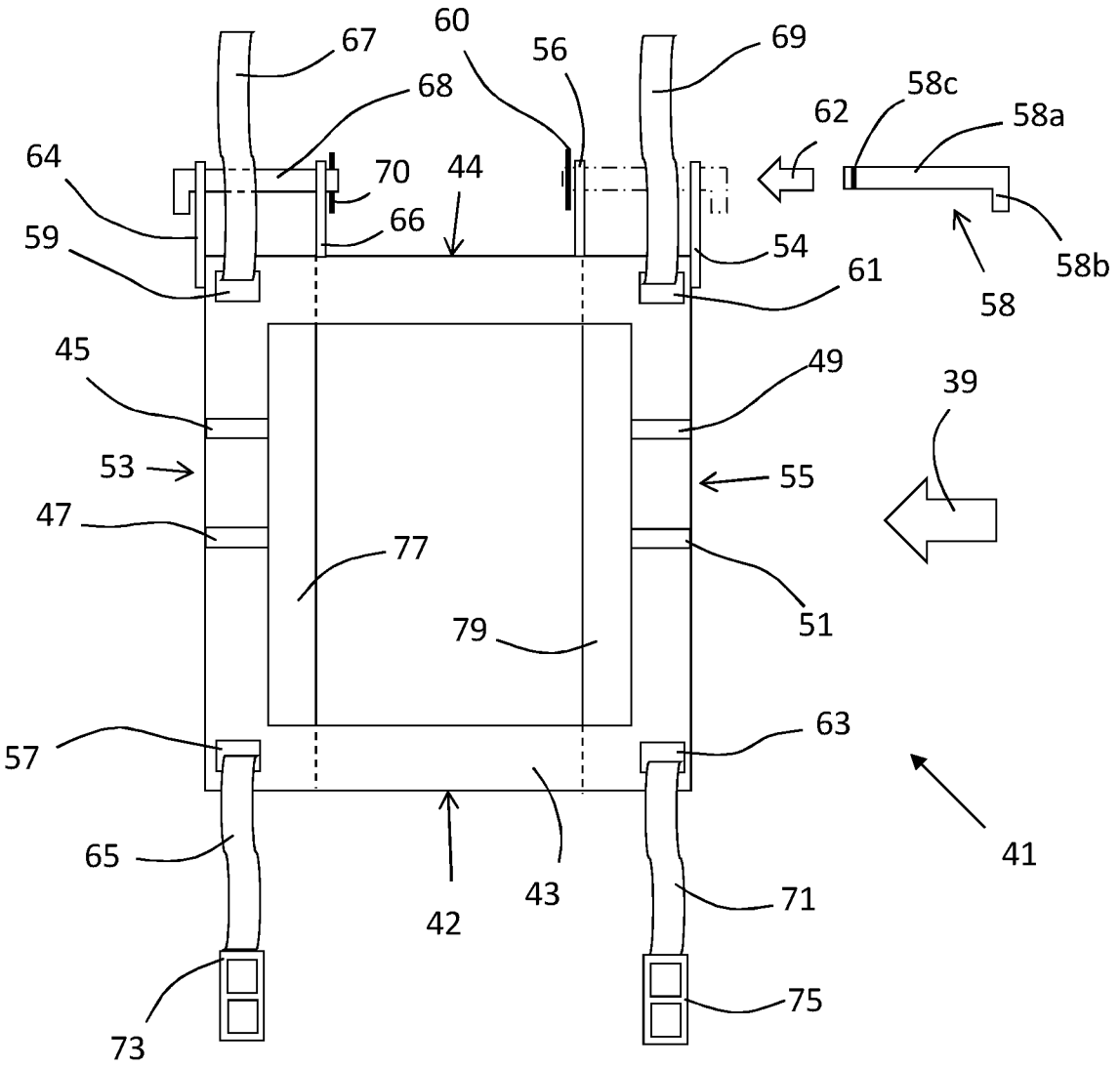
67
60
56
69
68
58c
62
58a
64
70
44
66
59
54
61
58b
58
45
49
39
53
55
47
77
51
79
57
63
41
65
42
43
71
73
75

Fig. 9

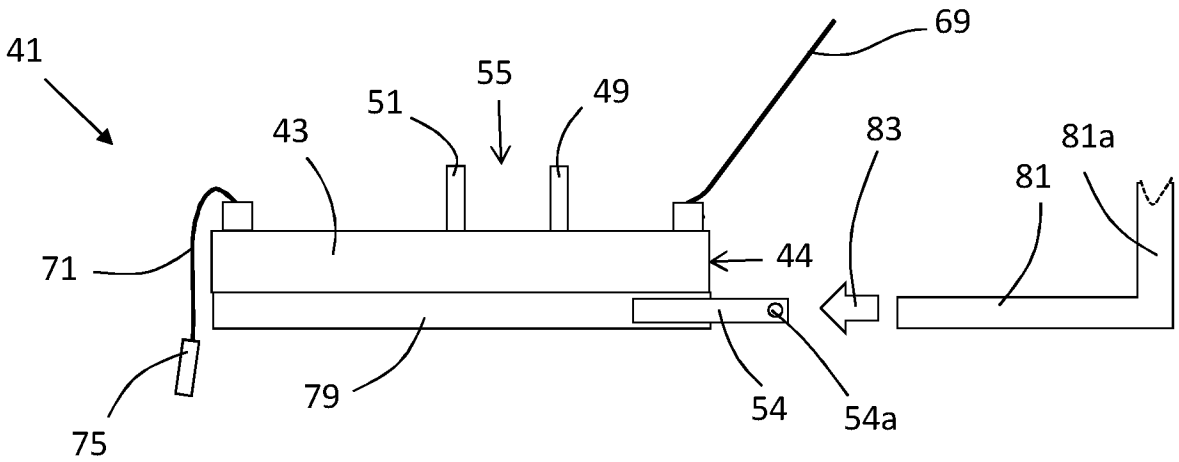
41
69
55
51
49
43
83
81a
81
71
44
79
54
54a
75

Fig. 10

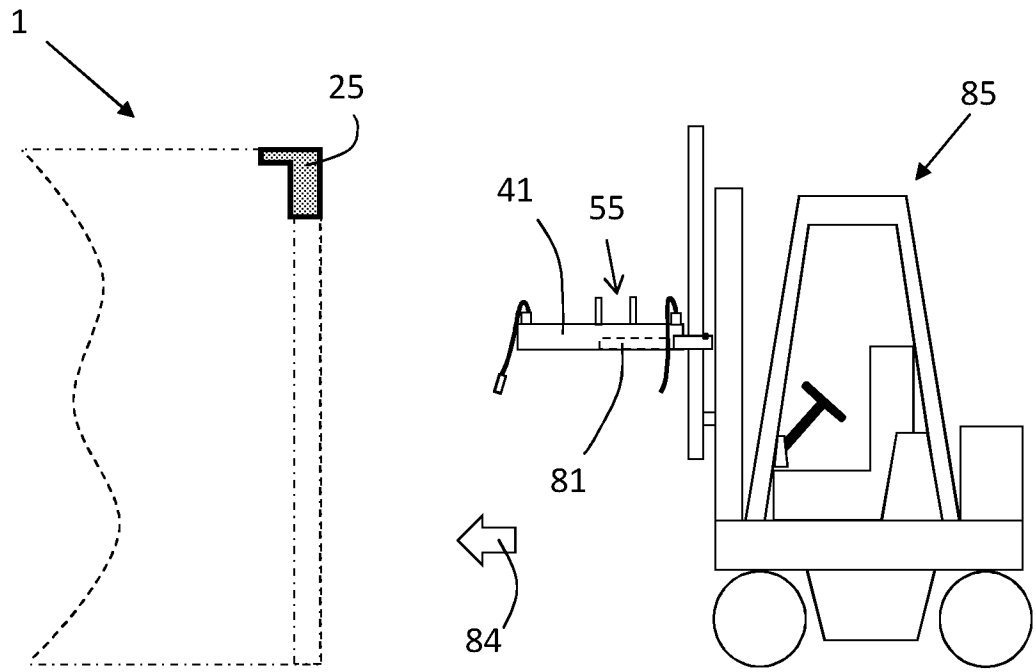

Fig. 11

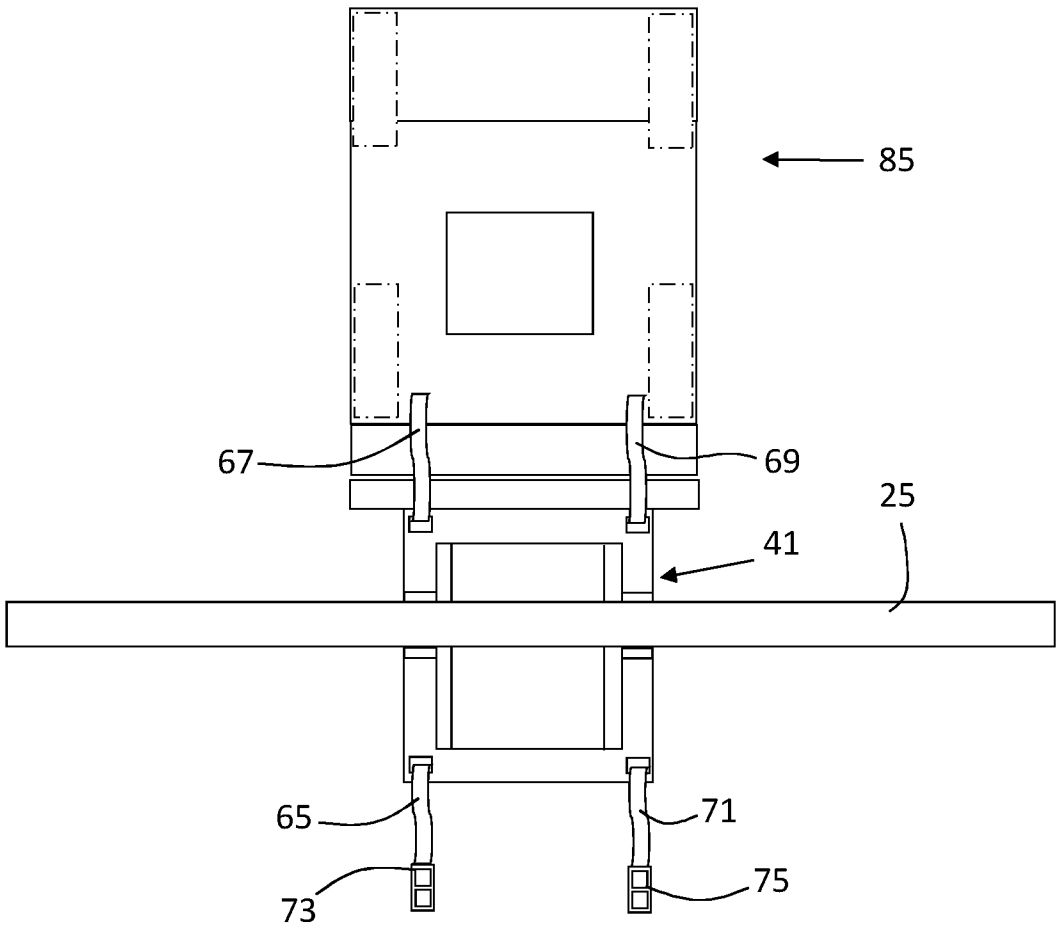

Fig. 12

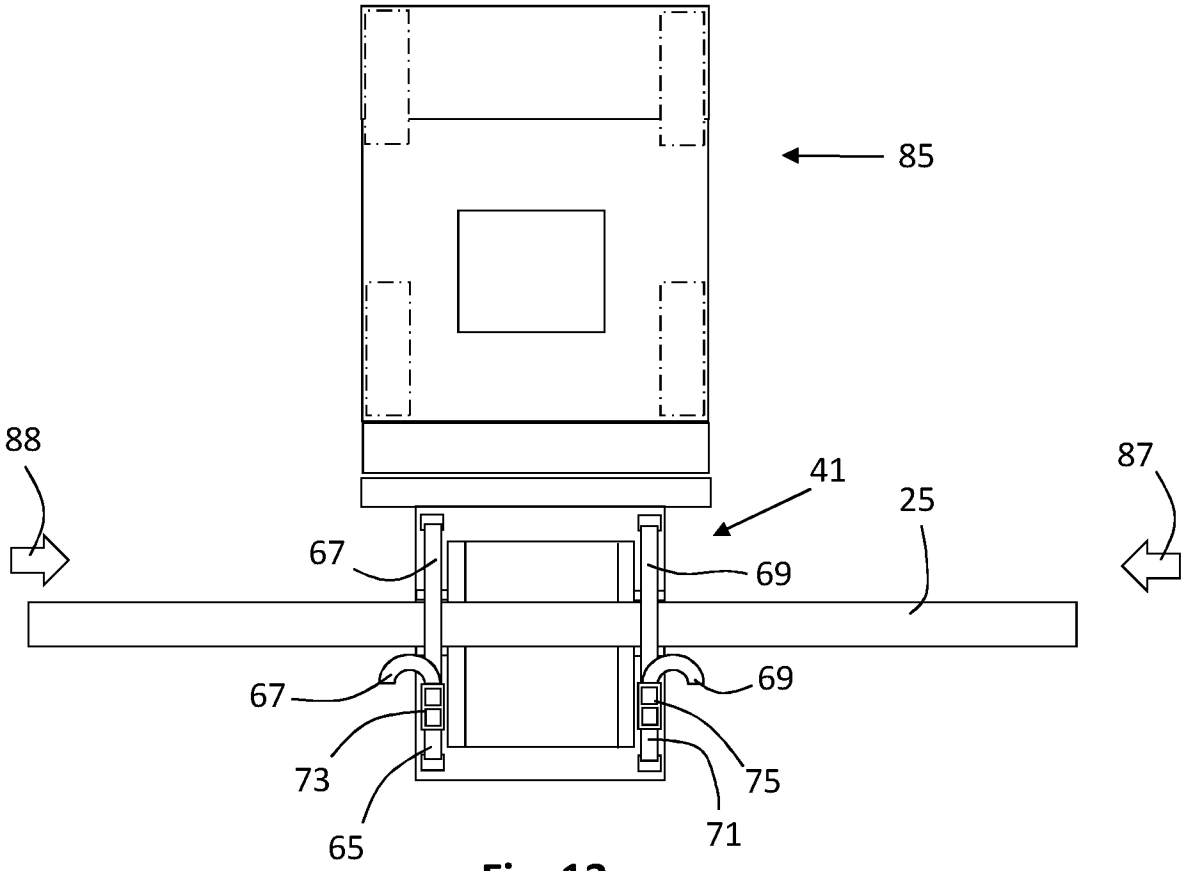
85
88
87
41
25
67
69
67
69
73
75
65
71

Fig. 13

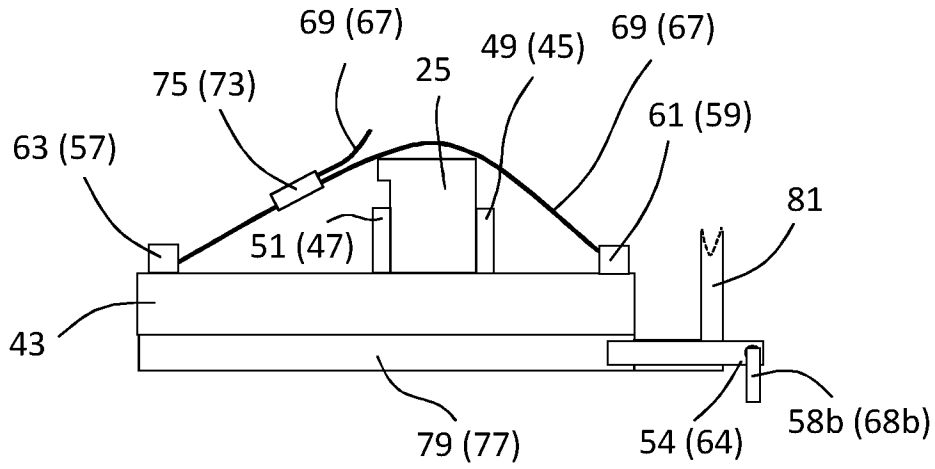
69 (67)
49 (45)
69 (67)
25
75 (73)
61 (59)
63 (57)
81
51 (47)
43
79 (77)
54 (64)
58b (68b)

Fig. 14

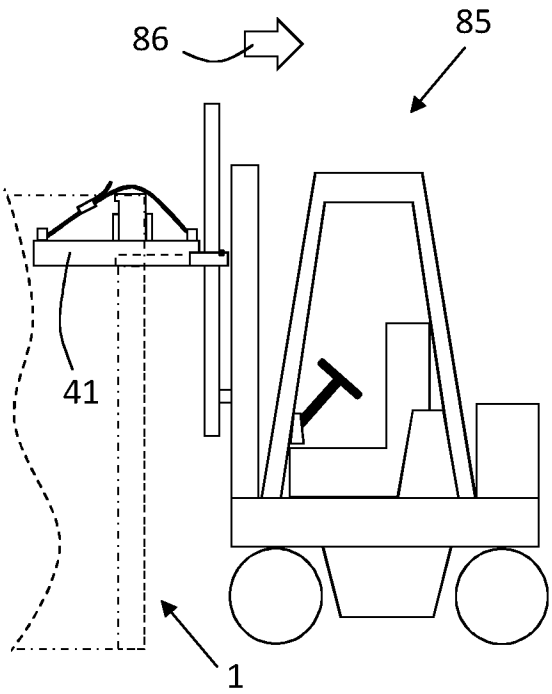

Fig. 15

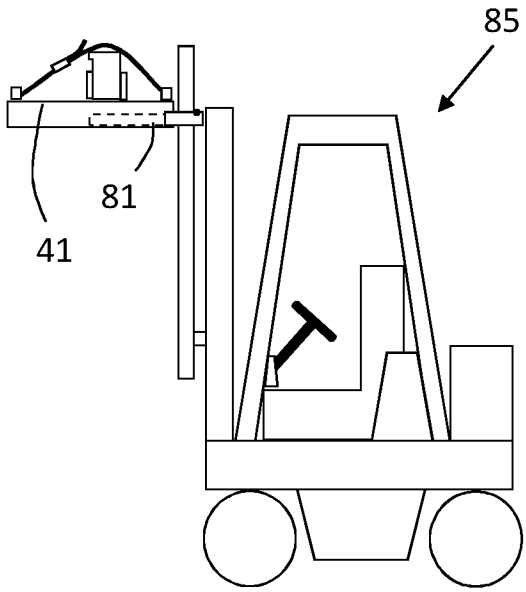

Fig. 16

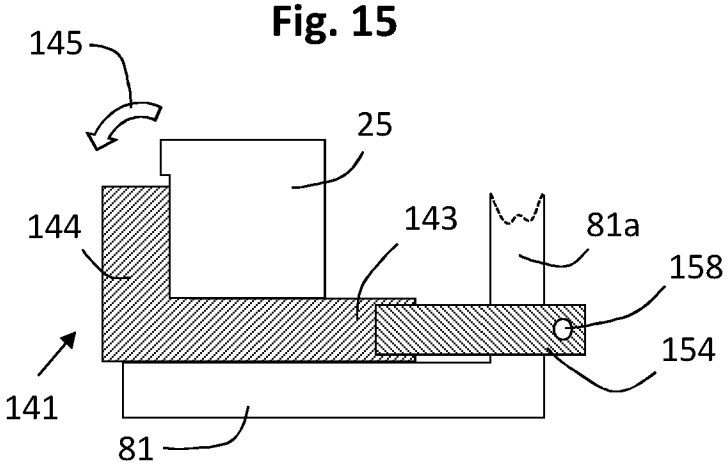

Fig. 17

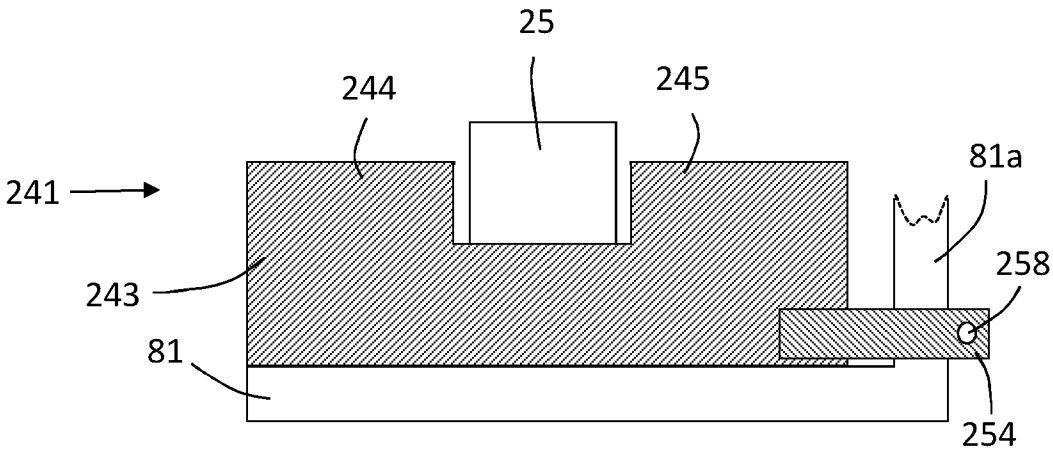

Fig. 18

INTERNATIONAL SEARCH REPORT

International application No
PCT/GB2015/050708

A. CLASSIFICATION OF SUBJECT MATTER
INV. B66F9/12 B66C1/22
ADD.

According to International Patent Classification (IPC) or to both national classification and IPC

B. FIELDS SEARCHED

Minimum documentation searched (classification system followed by classification symbols)
B66F B66C

Documentation searched other than minimum documentation to the extent that such documents are included in the fields searched

Electronic data base consulted during the international search (name of data base and, where practicable, search terms used)
EPO-Internal, WPI Data

C. DOCUMENTS CONSIDERED TO BE RELEVANT

Category*	Citation of document, with indication, where appropriate, of the relevant passages	Relevant to claim No.
X	GB 2 438 068 A (SMITH STEPHEN MICHAEL [GB]) 14 November 2007 (2007-11-14) abstract page 4, line 10 - page 6, line 13 figures	1-4, 7-12, 15-20
X Y	JP S51 17633 Y (.) 12 May 1976 (1976-05-12) figures	1,8-10, 12-20 3-6
Y	FR 2 224 399 A1 (POUYAUD ANDRE [FR]) 31 October 1974 (1974-10-31) page 4, line 34 - page 5, line 11 figure 4	3-6

-/--

[X] Further documents are listed in the continuation of Box C.

[X] See patent family annex.

* Special categories of cited documents :

"A" document defining the general state of the art which is not considered to be of particular relevance

"E" earlier application or patent but published on or after the international filing date

"L" document which may throw doubts on priority claim(s) or which is cited to establish the publication date of another citation or other special reason (as specified)

"O" document referring to an oral disclosure, use, exhibition or other means

"P" document published prior to the international filing date but later than the priority date claimed

"T" later document published after the international filing date or priority date and not in conflict with the application but cited to understand the principle or theory underlying the invention

"X" document of particular relevance; the claimed invention cannot be considered novel or cannot be considered to involve an inventive step when the document is taken alone

"Y" document of particular relevance; the claimed invention cannot be considered to involve an inventive step when the document is combined with one or more other such documents, such combination being obvious to a person skilled in the art

"&" document member of the same patent family

Date of the actual completion of the international search	Date of mailing of the international search report
21 May 2015	29/05/2015

Name and mailing address of the ISA/	Authorized officer
European Patent Office, P.B. 5818 Patentlaan 2 NL - 2280 HV Rijswijk Tel. (+31-70) 340-2040, Fax: (+31-70) 340-3016	Cabral Matos, A

1

Form PCT/ISA/210 (second sheet) (April 2005)

INTERNATIONAL SEARCH REPORT

International application No
PCT/GB2015/050708

C(Continuation). DOCUMENTS CONSIDERED TO BE RELEVANT

Category*	Citation of document, with indication, where appropriate, of the relevant passages	Relevant to claim No.
A	JP H07 315785 A (SANKYU KK) 5 December 1995 (1995-12-05) abstract figures -----	1,20

INTERNATIONAL SEARCH REPORT

Information on patent family members

International application No
PCT/GB2015/050708

Patent document cited in search report	Publication date	Patent family member(s)	Publication date
GB 2438068 A	14-11-2007	NONE	
JP S5117633 Y	12-05-1976		
FR 2224399 A1	31-10-1974	NONE	
JP H07315785 A	05-12-1995	NONE	