A. M. STEINERT.

ATTACHMENT FOR PLAYER PIANOS.

APPLICATION FILED AUG. 16, 1917.

1,261,175.

Patented Apr. 2, 1918.

2 SHEETS—SHEET 1.

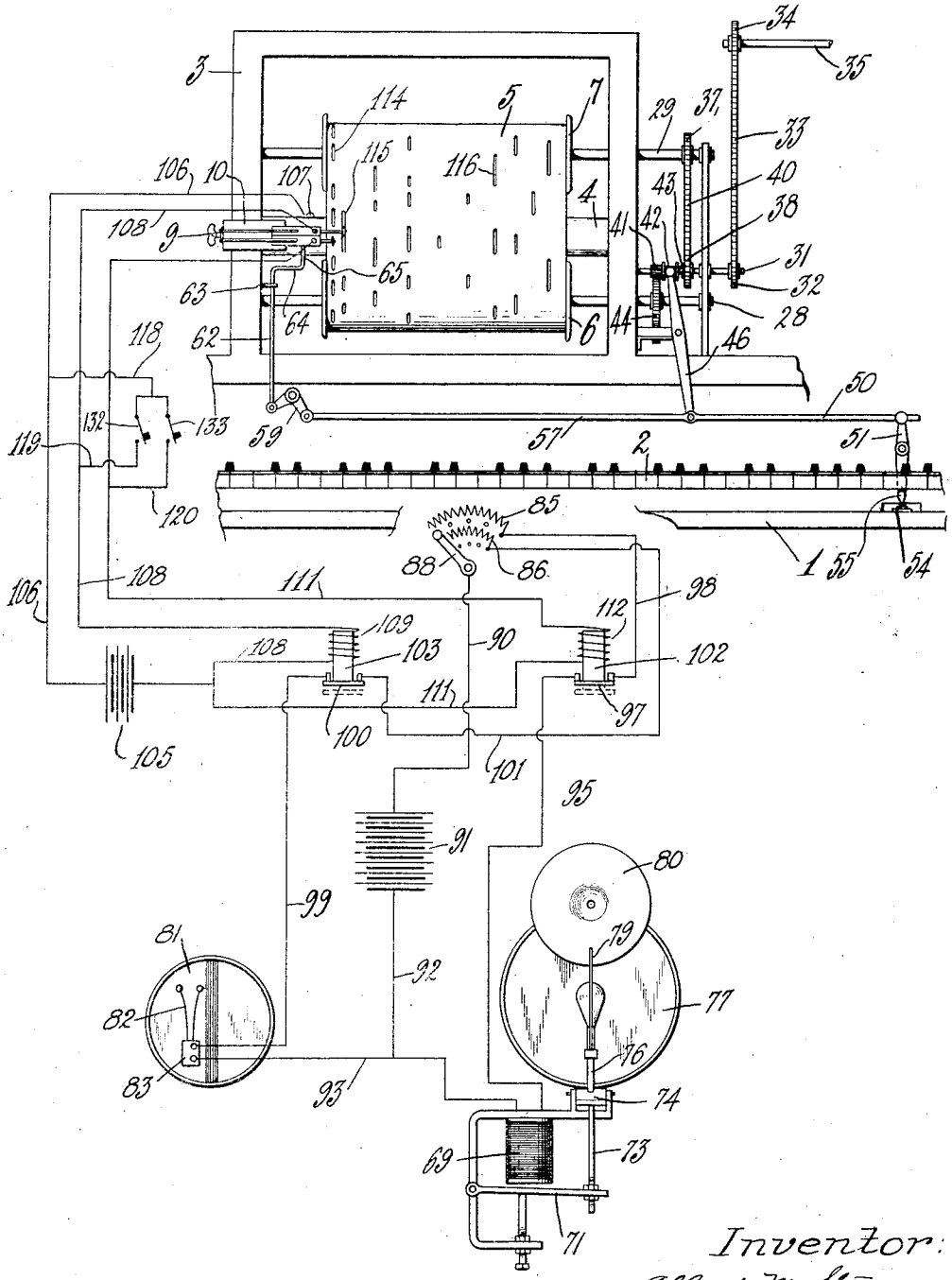

Fig. 1.

Inventor:
Albert M. Steinert
By Coralis E. Bellows
Attorney:

A. M. STEINERT.

ATTACHMENT FOR PLAYER PIANOS.

APPLICATION FILED AUG. 16, 1917.

1,261,175.

Patented Apr. 2, 1918.

2 SHEETS—SHEET 2.

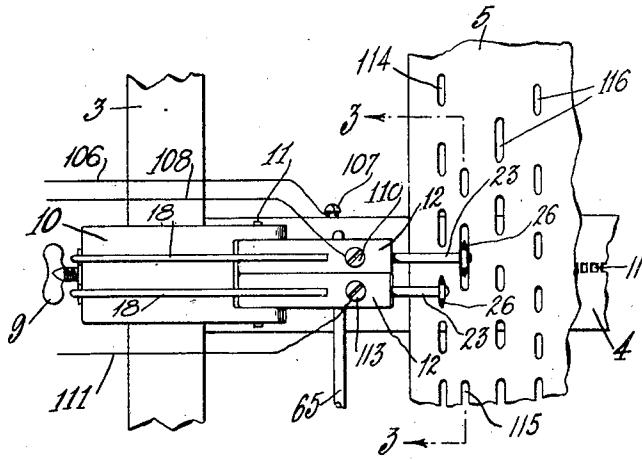

Fig. 2.

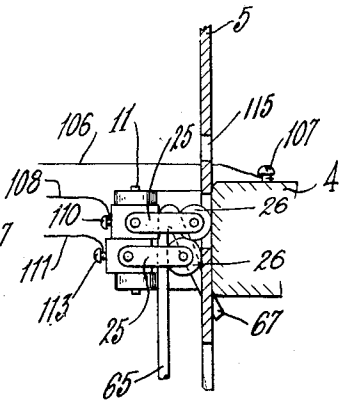

Fig 3

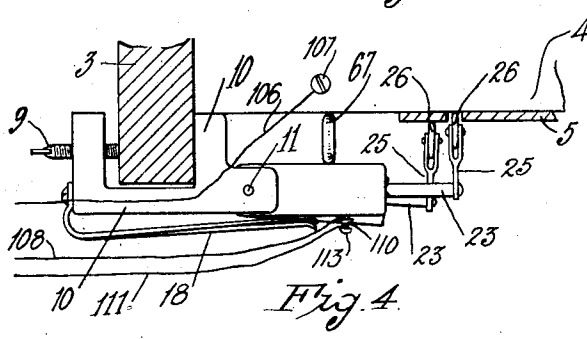

Fig. 4.

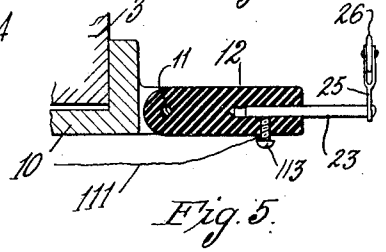

Fig. 5.

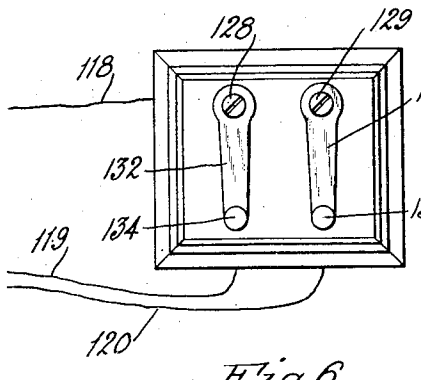

Fig. 6.

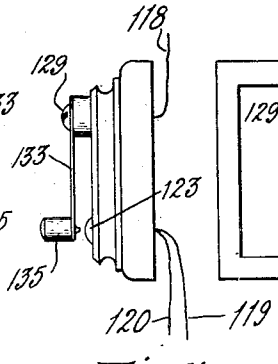

Fig. 7.

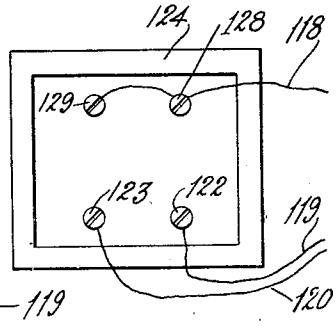

Fig. 8.

Inventor:
Albert M. Steinert
By Horatio E. Bellows
Attorney.

UNITED STATES PATENT OFFICE.

ALBERT M. STEINERT, OF PROVIDENCE, RHODE ISLAND.

ATTACHMENT FOR PLAYER-PIANOS.

1,261,175. Specification of Letters Patent. Patented Apr. 2, 1918.

Application filed August 16, 1917. Serial No. 186,437.

To all whom it may concern:

Be it known that I, ALBERT M. STEINERT, a citizen of the United States, residing at Providence, in the county of Providence and State of Rhode Island, have invented certain new and useful Improvements in Attachments for Player-Pianos, of which the following is a specification.

My invention relates to electrical attachments for musical instruments, such as player pianos, and is an improvement on the structure shown in my prior United States Patent No. 1,217,358 issued Feb. 27, 1917.

The essential objects of my invention are to control the auxiliary or accompanying instrument or instruments both independently of the traveling music sheet or conjointly therewith; to enable the operator to individually interpret the musical composition which is being rendered; to provide a controlling means whose manipulation shall have an educational effect upon the operator; and to attain these ends in a device which is both portable and adapted to facile incorporation into existing electrical attachments. Other objects and advantages will hereinafter be disclosed or pointed out.

To the above ends essentially my invention consists in such parts and combinations of parts as fall within the scope of the appended claims.

In the accompanying drawings which form a part of this specification,

Figure 1 is a front elevation of a portion of a player piano and the auxiliary instruments, showing the electrical connections including my novel controlling means diagrammatically,

Fig. 2, a front elevation of a portion of the note sheet and contacts engaged therewith,

Fig. 3, a section on line 3—3 of Fig. 2,

Fig. 4, a top plan view of the contacts and associated parts,

Fig. 5, a section of one of the blocks, and

Figs. 6, 7, and 8, plan, side, and bottom elevations respectively of the key carrier.

Like reference characters indicate like parts throughout the views.

In the drawings 1 represents the casing, 2 the keys, 3 the tracker frame, 4 the tracker bar, 5 the note sheet, and 6 and 7 the note sheet rolls of a player in conjunction with which my invention may be used. The set screw 9 clamps the carrier block 10 to the carrier frame. To this are pivoted by the pin 11 the insulating blocks 12, engaged by their springs 18, and carrying the arms 23 with their angularly disposed portions 25 to which are pivoted the contacts 26 adapted to coöperate with the note sheet perforations in the usual manner. Herein is also shown the roll reversing mechanism comprising the roll shaft 28 and 29, reversing shaft 31 carrying wheel 32, driving chain 33, driver 34, and power shaft 35. The wheels 37 and 38 on the roll shafts are connected by the chain 40. 41 is the slidable pinion, 42 the clutch sleeve, 43 the clutch teeth in the path of the sleeve, 44 the gear engageable with the pinion by the vibration of the shifter lever 46, and 50 the shifter rod, vibrated through lever 51 by operating lever 54 with its handle 55. The mechanism for forcing the spring pressed contact blocks with their contacts away from the note sheet comprises the usual bar 57, bell crank lever 59, and rod 62 embraced by guide 63, and provided with angular extension 64, vertical portion 65, and the V shaped extension 67. Referring to the auxiliary musical instruments 69 is bass drum magnet, 71 its armature, 73 the rod carried thereby, engaging pivoted plate 74 fast to which is the beating arm 76 of the bass drum 77. The arm 79 engages the cymbals 80. 81 is the snare drum, and 82 the spring beating arms actuated by the buzzer 83. The electrical mechanism connecting the contacts and the auxiliary musical instruments includes the rheostat coils 85, 86, lever 88, wire 90 from the latter to the battery 91, wire 92 from the battery to wire 93 connecting the buzzer and magnet, wire 95 from the latter to relay switch 97, and wire 98 from the switch to the coil 85, which constitutes the circuit between the bass drum and rheostat. The rheostat circuit to the snare drum includes the wire 99 from the buzzer to relay switch 100, and wire 101 from the latter to coil 86. By these two circuits the intensity of the sound of the drums is varied. The circuits to the tracker bar and contacts include the magnets 102 and 103 of the drum switches, the battery 105, the wire 106 from the battery to the binding screw 107 on the tracker bar; the wire 108 from the battery forming the coil 109 of the magnet 103 and extending thence to a binding screw 110 in one of the blocks 12. Through special marginal perforations 114 and 115 in the note sheet the contacts engage the metallic tracker bar to complete the

circuits except when the contact blocks 12 are forced away from the sheet by the lever mechanism. 116 are the usual note sheet perforations which coöperate with the usual tracker bar perforations 117 to operate the piano. When a stock music sheet is used, that is one without the special marginal perforations, the drums are not operated even though the contacts 26 are not tilted away from the sheet.

My novel device is shown for the purposes of illustration as embodied in the structure hereinabove described. Flexible wires 118, 119 and 120 are electrically connected in any convenient manner with the wires 106, 108 and 111 respectively at points intermediate the coils and their respective binding screws in the tracker bar and contact blocks. The wires 119 and 120 have spaced terminals 122 and 123 spaced from each other in a portable block 124. The wire 118 is in electrical engagement with posts 128 and 129, fast in the block, spaced from each other, and from the terminals. Spring arms 132 and 133, fast to the posts 128 and 129, extend over the terminals 122 and 123 respectively and are movable into contact with the latter by manually depressing the handles or thumb pieces 134 and 135 upon the respective arms.

Thus the actuation of the switch, of which 132 is the movable member, controls the beats of the snare drum through the circuits 118, 106, 108 and 119; and the switch, whose movable member is 133, actuates the base drum through the circuit 118, 106, 111 and 120.

Thus when a stock music sheet is in operation, or when the contacts 26 are elevated, the operator may manually operate the drums in accompaniment with the music of the piano, thus giving his personal or individual interpretation to the musical composition, and affording a means of musical instruction. The arms 132 and 133 may be operated by either the fingers or the feet of the player. The block 124 is portable and the length of the wires or cords 118, 119 and 20 is ample to allow the block to be placed either upon or remote from the piano casing.

I claim:—

1. The combination of a player piano, tracker-bar contacts, auxiliary percussive musical instruments exterior of the piano, electrical circuits connecting the contacts with said instruments, connections in parallel with the tracker-bar contacts, and switches in said connections exterior of the piano.

2. The combination of a player piano having a tracker bar and its contacts, auxiliary percussive musical instruments exterior of such piano, electric circuits connected with said tracker bar in which said instruments are embraced, additional branch circuits in parallel with said contacts and switches in said last-named circuits.

3. The combination of a player piano, two auxiliary percussive musical instruments exterior thereof, electrical circuits connecting the piano with the instrument, blocks, additional circuits connecting the blocks with the first-named circuits, and manually-operated means in the blocks for closing the additional circuits, said blocks being portable and applicable for use either upon or remote from the piano casing.

In testimony whereof I have affixed my signature.

ALBERT M. STEINERT.

Copies of this patent may be obtained for five cents each, by addressing the "Commissioner of Patents, Washington, D. C."