J. T. CALLANAN.

CASING HEAD FOR OIL AND GAS WELLS.

APPLICATION FILED FEB. 21, 1913.

1,072,910. Patented Sept. 9, 1913.

FIG. 1.

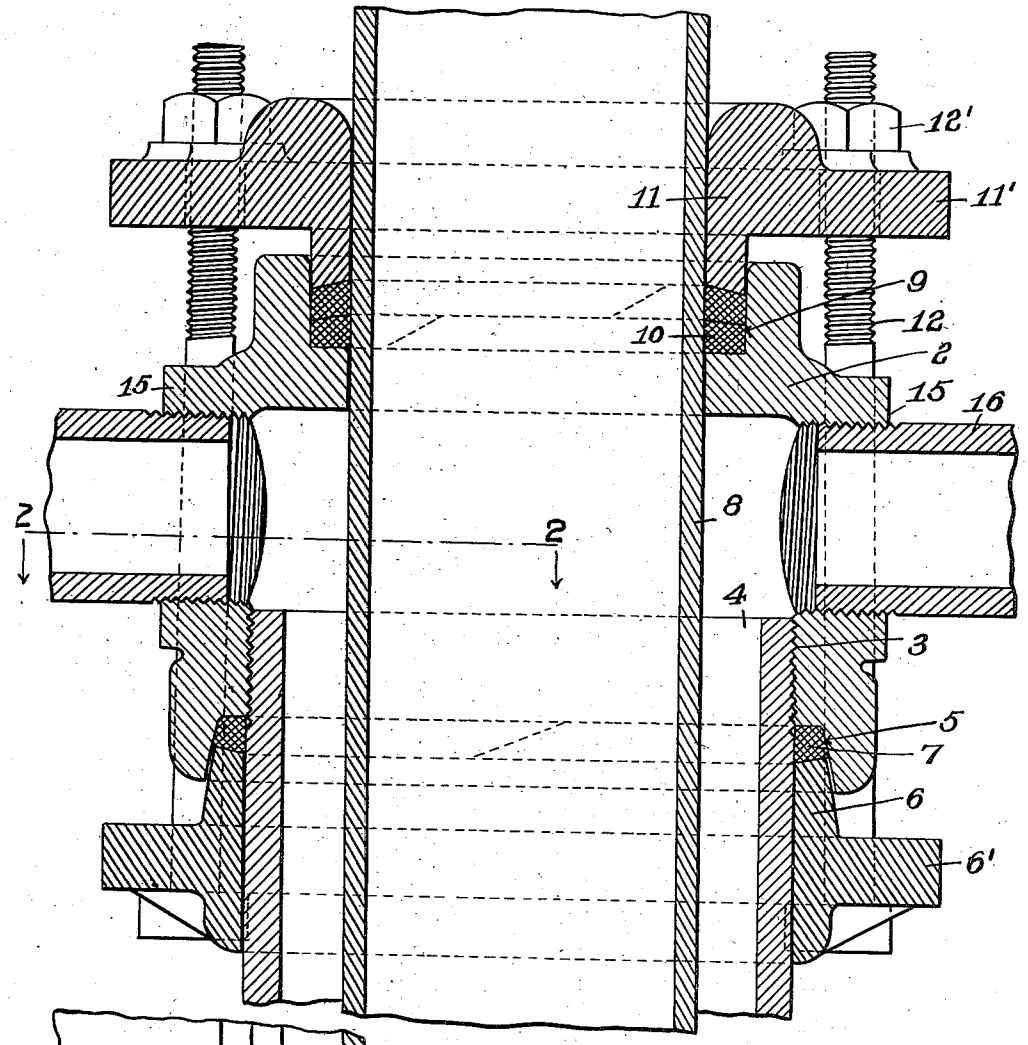

FIG. 2.

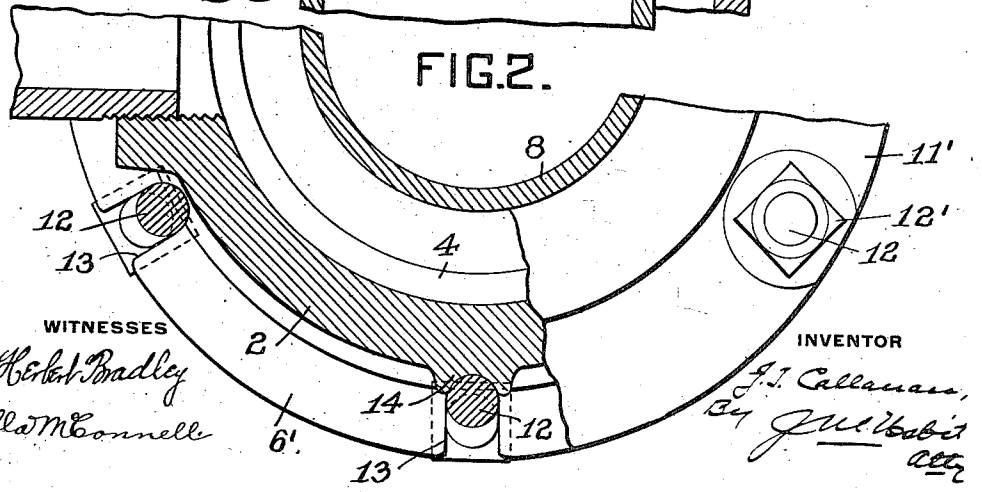

WITNESSES

J. Herbert Bradley

Ella M. Connell

INVENTOR

J. T. Callanan,

By J. M. Babbitt

Atty

UNITED STATES PATENT OFFICE.

JAMES T. CALLANAN, OF PARKERSBURG, WEST VIRGINIA.

CASING-HEAD FOR OIL AND GAS WELLS.

1,072,910. Specification of Letters Patent. Patented Sept. 9, 1913.

Application filed February 21, 1913. Serial No. 749,866.

To all whom it may concern:

Be it known that I, JAMES T. CALLANAN, a citizen of the United States, and resident of Parkersburg, in the county of Wood and State of West Virginia, have invented certain new and useful Improvements in Casing-Heads for Oil and Gas Wells, of which the following is a specification.

This invention relates to casing heads for oil and gas wells, and the primary object is to provide simple and efficient means for sealing the connection between the lower end of the head and the casing where leakage frequently occurs, particularly in high pressure wells.

It is usual practice to provide the upper end of the casing head with a stuffing box which provides a seal around the well tubing, or a string of smaller casing, as the case may be, and a further purpose of the present invention is to provide gland adjusting and securing means which is common to the upper and lower seals, the glands being in opposed relation and connected by bolts at the exterior of the casing head.

In the accompanying drawings, Figure 1 is a vertical section of the casing head in position on well casing and tubing. Fig. 2 illustrates a portion of the same in top plan and another portion in sectional plan, the latter being taken on line 2—2 of Fig. 1.

Referring to the drawings, casing head 2 has its open lower end threaded internally at 3 to connect with the threaded upper end of well casing 4. The lower extremity of head 2 is recessed to form stuffing box 5 which is entered by the casing-embracing gland 6 for compressing a suitable packing 7.

Extending downwardly through head 2 and casing 4 is tube 8, which may be the well tubing or it may be a casing of smaller diameter inserted within casing 4, it being common in oil and gas well practice to provide a well with two or more strings of casing, one within the other, the casing of smallest diameter extending to the bottom of the well, as will be understood. The well tubing or inner casing 8 extends upwardly through stuffing box 9 at the top of head 2 with packing 10 therein adapted to be compressed by gland 11.

In the present adaptation the adjusting means for the lower gland 6 is common to the upper gland 11, the glands being in opposed relation and connected by bolts 12 at the exterior of head 2. In the preferred adaptation, flange 6′ of gland 6 is slotted at 13 so that the lower headed ends of bolts 12 may be readily applied, the threaded upper ends of the bolts extending through apertures in flange 11′ of gland 11, with adjusting nuts 12′ bearing on said flange. To hold the glands and their bolt passages in proper relation, the exterior of head 2 may be formed with the external flanged depression 14, Fig. 2, to receive one of bolts 12. Head 2 is provided with the usual lateral outlets 15, to one or both of which pipes 16 may be connected leading to a pipe line or receiving tank.

The improvement precludes waste at the joint between the casing head and casing 4 where much leakage has been experienced heretofore in instances where the threaded joint has not formed an efficient seal. And in the adaptation herein disclosed, where the stuffing box is provided at the top of the casing head, the gland adjusting means is common to the two stuffing boxes and provides a simple and highly efficient construction as the setting of one gland insures the setting of both.

I claim:—

1. A casing head threaded at its lower end to unite with casing, a gland adapted to embrace the casing beneath the head, a packing adapted to be compressed by the gland for sealing the joint between the head and casing, and gland adjusting means.

2. A casing head threaded at its lower end to unite with casing, a gland adapted to embrace the casing beneath the head, a packing adapted to be compressed by the gland for sealing the joint between the head and casing, and gland adjusting means extending to and actuated at the upper end of the casing head.

3. A casing head threaded at its lower end to unite with casing, the head beneath the threaded portion recessed to form a stuffing box, a gland adapted to embrace the casing, packing adapted to be compressed in the stuffing box for sealing the joint between the head and casing, and gland adjusting means.

4. A casing head open at its lower end to connect with casing and open at its upper end to pass tubing, casing packing means at the lower end of the head, and tubing packing means at the upper end of the head.

5. A casing head open at its lower end to

connect with casing and open at its upper end to pass tubing, the upper and lower ends of the casing head each provided with a stuffing box, packing for each box, glands—one for each stuffing box, and gland adjusting means.

6. A casing head open at its lower end to connect with casing and open at its upper end to pass tubing, the upper and lower ends of the casing head each provided with a stuffing box, packing for each box, glands—one for each stuffing box, and adjusting means common to the two glands.

7. A casing head open at its lower end to connect with casing and open at its upper end to pass tubing, the upper and lower ends of the easing head each provided with a stuffing box, packing for each box, glands—one for each stuffing box, and bolts at the exterior of the head adjustably connecting the glands.

8. A casing head open at its lower end to connect with casing and open at its upper end to pass tubing, the upper and lower ends of the casing head each provided with a stuffing box, packing for each box, glands—one for each stuffing box, and bolts at the exterior of the head and at their lower ends connected to the lower gland and at their upper ends adjustably secured to the upper gland.

9. A casing head open at its lower end to connect with casing and open at its upper end to pass tubing, the upper and lower ends of the casing head each provided with a stuffing box, packing for each box, glands—one for each stuffing box, headed bolts, the lower gland slotted to receive the headed ends of the bolts, the upper gland formed with bolt passages, and nuts for the bolts bearing on the upper gland.

10. A casing head open at its lower end to connect with casing and open at its upper end to pass tubing, the upper and lower ends of the casing head each provided with a stuffing box, packing for each box, glands—one for each stuffing box, the exterior of the head formed with a vertical bolt depression, and bolts at the exterior of the head for adjustably connecting the glands with one of the bolts entered in said depression.

In testimony whereof I affix my signature in presence of two witnesses.

J. T. CALLANAN.

Witnesses:
F. J. BRADFORD,
R. W. PURPUS.