Nov. 20, 1928. 1,692,063

A. M. TROGNER

PIEZO-ELECTRIC CRYSTAL APPARATUS

Filed April 24, 1926 2 Sheets-Sheet 1

FIG. 1

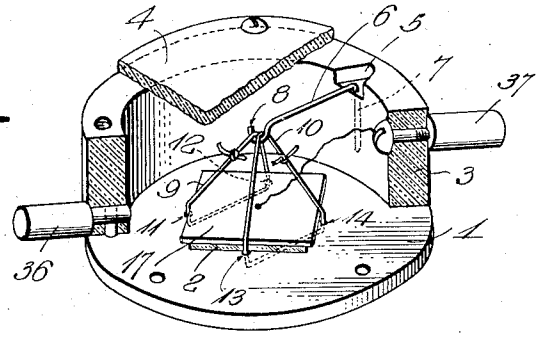

FIG. 2

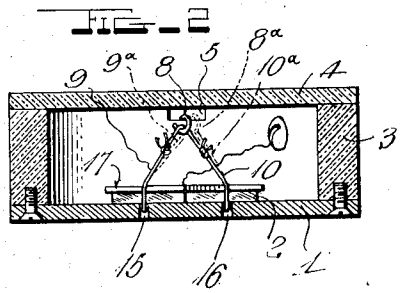

FIG. 3

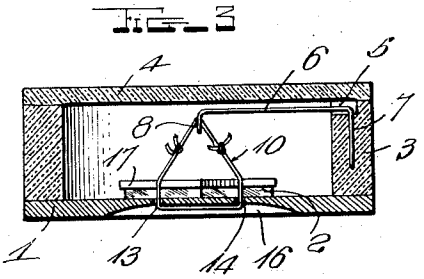

FIG. 4

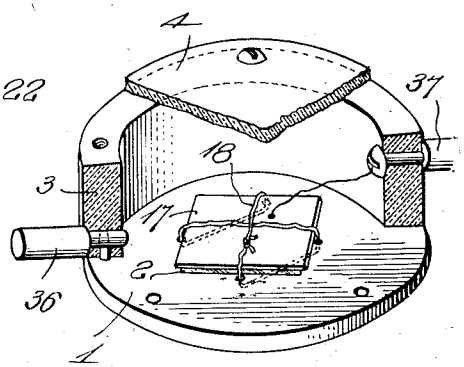

FIG. 5

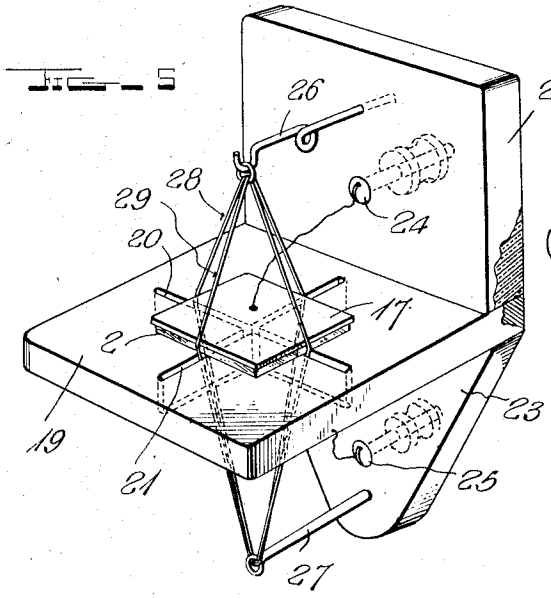

INVENTOR.
A. M. Trogner,
BY
Robert A. Lavender
ATTORNEY.

Nov. 20, 1928. 1,692,063

A. M. TROGNER

PIEZO-ELECTRIC CRYSTAL APPARATUS

Filed April 24, 1926 2 Sheets-Sheet 2

FIG. 6

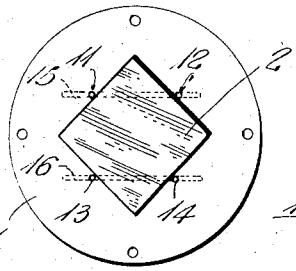

FIG. 7

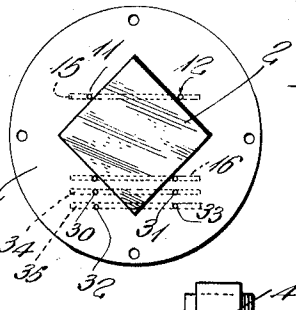

FIG. 8

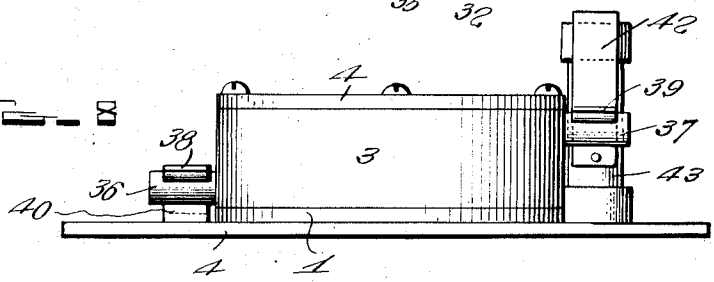

FIG. 9

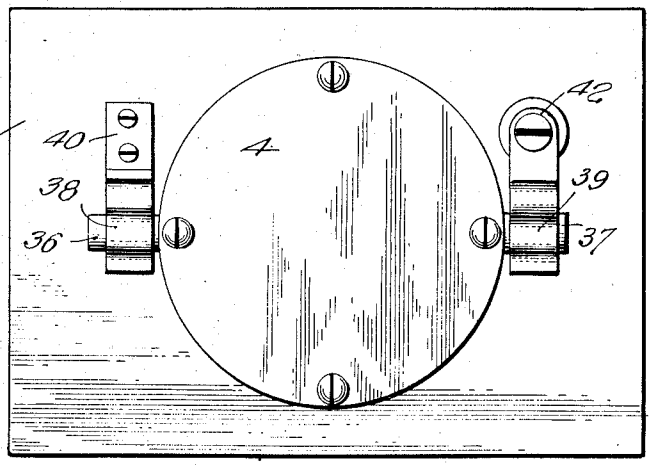

FIG. 10

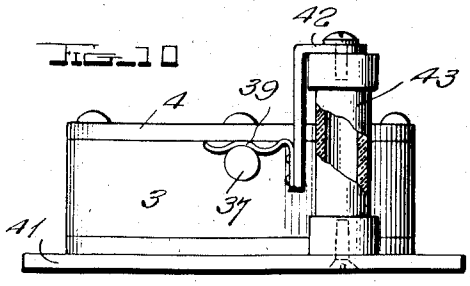

FIG. 11

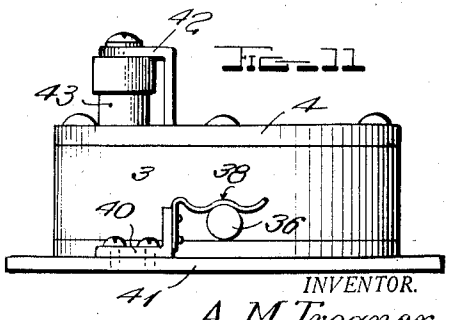

INVENTOR.
A. M. Trogner,
BY Robert A Lavender
ATTORNEY.

Patented Nov. 20, 1928. 1,692,063

UNITED STATES PATENT OFFICE.

ARTHUR M. TROGNER, OF TAKOMA PARK, MARYLAND, ASSIGNOR TO WIRED RADIO, INC., OF NEW YORK, N. Y., A CORPORATION OF DELAWARE.

PIEZO-ELECTRIC-CRYSTAL APPARATUS.

Application filed April 24, 1926. Serial No. 104,381

My invention relates broadly to piezo electric crystal apparatus and more particularly to a mounting for piezo electric crystals for permitting the free mechanical vibration thereof while providing a substantial mounting for the piezo electric crystal.

One of the objects of my invention is to provide a holder for a piezo electric crystal for permitting the piezo electric crystal to be readily connected in a circuit for sustaining oscillations at constant frequency and providing for the free mechanical vibration thereof.

Another object of my invention is to provide a mechanical mounting for a piezo electric crystal whereby crystals which are ground to various sizes may be centrally located within the holder and free mechanical vibration thereof permitted.

Another object of my invention is to provide a mounting for a piezo electric crystal element where a cantilever spring member is provided for maintaining the piezo electric crystal under the confining action of insulated tie cords in a central location within the crystal holder where it is free to vibrate in its own natural period for sustaining electrical oscillations of constant frequency.

Still another object of my invention is to provide a yieldable tie cord mounting for piezo electric crystals for sustaining oscillations by means of piezo electric crystals with minimum restraint upon the crystal.

Still another object of my invention is to provide a piezo electric crystal holder and a mounting therefor which permits the quick removal and insertion of a piezo electric crystal holder in the mounting for connecting a piezo electric crystal of a particular frequency characteristic in the electrical control circuit.

A still further object of my invention is to provide a piezo electric crystal mounting where minimum electrostatic capacity exists between the two parts of the electrical circuit between which the piezo electric crystal is connected.

An additional object of my invention is to provide a piezo electric crystal holder and mounting therefor by which good thermal contact may be established between the bottom plate of the crystal holder and the support for maintaining by conduction a fairly constant temperature for the piezo electric crystal.

In using quartz or other crystals as piezo electric oscillators or frequency controllers for vacuum tube generators of oscillations, the maximum controlling effect is obtained when the full area of the crystal is utilized by covering it with the upper contact plate. Also the capacity between the two parts of the circuit between which the crystal is connected, outside of that through the crystal proper, must be kept low. My construction of crystal holder provides for flexibly maintaining the crystal and contact plate in a definite relation without interfering with the vibrations of the crystal when in use. Square, rectangular or round contact plates may be used with correspondingly shaped crystals by proper spacing of the holes in bottom plate for securing cords. Heretofore it has not been possible to use square or rectangular plates on square or rectangular crystals unless complicated means were used for securing the plates so as to always entirely cover the crystal. Such means almost invariably make use of solid material so placed that only relatively small movements of the crystal and plate were possible, but, the use of such solid materials involved the risk of breaking the relatively fragile crystals in handling the shipment. Also such solid materials usually increased the by-pass capacity thus reducing useful energy through the crystal. With these forms of restraining means it was also possible under certain conditions of handling or use for the crystal to get out of restraint into inoperative position where it was also subject to increased danger of breakage or damage. My construction of holder substitutes relatively soft and yielding cord or thread for these solid materials yet provides for even closer and better and positive securing of the crystal and contact plate with little or no by-pass capacity. Crystals are readily removed or inserted.

My invention will be more clearly understood from the specification hereinafter following by reference to the accompanying drawings in which:

Figure 1 is a perspective view of the piezo electric crystal holder of my invention broken away to show the interior arrangement; Fig. 2 is a cross-sectional view taken through the piezo electric crystal holder of my invention in a plane at right angles to the plane of the direction of the grooves which are provided in the lower contact plate

of the crystal holder; Fig. 3 is a cross-sectional view of the piezo electric crystal holder taken in a plane passing through one of the grooves in the lower contact plate and showing the arrangement of the restraining cords.

Figure 4 is a perspective view of a modified form of the piezo electric crystal holder showing an arrangement where only slight damping action or restraint is imposed upon the piezo electric crystal element; Fig. 5 is a perspective view of another modified form of a piezo electric crystal mounting embodying the principles of my invention; Fig. 6 is a plan view of the lower contact plate of the piezo electric crystal holder showing the means which I provide for locating the piezo electric crystal element on the lower contact plate; Fig. 7 shows a modified construction of the contact plate for a piezo electric crystal element where provision is made for piezo-electric crystals ground to different frequency characteristics; Fig. 8 is a side elevation of the piezo electric crystal holder of my invention mounted on a supporting structure; Fig. 9 is a top plan view of the piezo electric crystal holder in mounted position upon a supporting plate; Fig. 10 is an end view of the piezo electric crystal holder in position upon the supporting plate and illustrating one of the terminals which is insulated from the supporting plate; and Fig. 11 is an end view looking in the opposite direction and showing the other resilient terminal which establishes connection between one face of the piezo electric crystal element and the control circuit.

Referring to the drawings in more detail, reference character 1 designates the lower contact plate which serves to support the piezo electric crystal element 2 and establishes connection with the lower face thereof. An insulated casing 3 is secured to the lower contact plate 1 and is provided with a top closure plate 4. One side of the casing 3 is cut away at the interior thereof, as represented at 5, for supporting therein one end of a cantilever spring member 6. The spring member 6 consists of a resilient wire device having a downwardly depending end portion 7 and a hook portion 8 on the outer extremity thereof at substantially the center of the casing. The spring member 6 is free to move in a horizontal plane at the same time that it tends to spring upwardly. The reason for providing for horizontal movement of the spring device 6 is to facilitate the insertion and removal of piezo electric crystal elements and also to compensate for any inequalities in the lengths of the two cord or thread loops 9 and 10 by swinging to one side or the other until the tension on the two loops is equal, as shown more clearly in the dotted lines shown in Fig. 2. The cord or thread loops 9 and 10 pass through the lower contact plate 1 and through apertures 11, 12, 13, and 14 formed in the lower contact plate 1 as more clearly illustrated in Fig. 6. The apertures 11 and 12 are joined by means of a cut-away groove portion 15, while the apertures 13 and 14 are provided with a cut-away groove 16 in such manner that the cord or thread members 9 and 10 lie wholly within the plane of the surface of the contact plate 1. The upper face of the piezo electric crystal element is touched by means of a plate 17 which is definitely located centrally within the casing 3 by means of the flexible cord or thread loops 9 and 10 secured under the tension of the spring member 6.

In Fig. 4 I have shown a modified form of a crystal holder where the contact relationship between the piezo electric crystal element 2 and the upper contact plate 17 is maintained by means of a cord or thread 18, which is loosely tied around the piezo electric crystal element and contact plate for locating the combined arrangement within the piezo electric crystal holder without imposing any substantial damping action or restraint upon the action of the piezo electric crystal element. Only a single cord or thread is employed in the arrangement illustrated in Fig. 4 which in the process of assembly is first tied over a suitable spacer piece which is then removed, leaving the crystal element and contact plate only very loosely held in the desired relative position with minimum damping tendency or restraining action on the vibration of the crystal.

The modified form of the piezo electric crystal holder illustrated in Fig. 5 is adapted for mounting various sizes of piezo electric crystal holders. In this arrangement a lower contact plate or surface 19 is provided with slots 20 and 21 cut therein at right angles to each other. The piezo electric crystal element 2 rests on the contact surface 19. Insulated panel members 22 and 23 are provided at the rear of plate 19 both above and below this plate. These panel members carry binding posts 24 and 25, one of which establishes connection with contact plate 17 and the other of which is connected with the supporting plate 19. A spring support 26 is provided in the upper panel 22 and a post 27 is mounted in the lower panel 23 between which the loop cords or threads 28 and 29 are stretched, passing through slots 20 and 21 in supporting plate 19 for confining the piezo electric crystal element in a definite location upon the supporting plate 19 and imposing only a selected restraining action thereon.

In order to provide for piezo electric crystal elements which are ground to different frequency characteristics, I may construct the lower contact plate 1, as shown more clearly in Fig. 7 with a plurality of sets of apertures 30—31 and 32—33 interconnected

with cooperating grooves 34 and 35 in the under surface of the contact plate 1. By this arrangement the restraining cords may be changed in position so that different sizes of piezo electric crystals may be inserted in the same holder.

In Fig. 8 I have shown the piezo electric crystal holder carried by a supporting plate where terminals 36 and 37 of the piezo electric crystal holder which connect to the opposite faces of the piezo electric crystal element 2 are secured under spring clips 38 and 39. A spring device 38 is supported on a bracket 40 which is secured to conducting plate 41. The spring clip 39 is carried by a bracket 42 supported on a pedestal insulator 43 for substantially separating the opposite terminals of the piezo electric crystal device. The arrangement of the resilient clips 38 and 39 is such that the piezo electric crystal holder may be readily slipped in or removed from the mounting for rapidly changing the piezo electric crystal which is connected in the control circuit. That is to say, a number of piezo electric crystal holders, each including piezo electric crystals of selected frequency characteristics, may be provided and readily slipped in or removed from the electrical circuit whose frequency is to be controlled.

The tie cords 9, 10, 18, 28 and 29 serve to retain the crystal and upper contact plate in definite relation with each other as well as with the lower plate of the holder. In this manner a square or rectangular plate will be held with full area contact on the crystal and not allowed to rotate so that the plate is partly off the crystal at its corners, losing efficiency because of loss of effective working area of crystal.

While I have described my invention in certain preferred embodiments, I desire it to be understood that modifications in the construction and arrangement of parts may be made without departing from the spirit of my invention, and that no limitations upon the invention are intended except as may be imposed by the scope of the appended claims.

What I claim as new and desire to secure by Letters Patent of the United States is as follows:

1. A piezo electric crystal holder comprising in combination a conductive plate for supporting a piezo electric crystal element, a metallic plate for establishing electrical connection with the upper surface of said piezo electric crystal element, and a thread member secured through said conductive plate member to maintain said metallic plate and piezo electric crystal element in a selected position relative to each other and to said conductive plate.

2. A piezo electric crystal apparatus comprising in combination a metallic supporting plate, a piezo electric crystal element mounted on said supporting plate, a contact plate for establishing electrical connection with the upper surface of said piezo electric crystal element, and a plurality of flexible cord members passing through said supporting plate and over said piezo electric crystal element and contact plate, for centering said element with respect to said supporting plate.

3. A piezo electric crystal holder comprising in combination a metallic supporting plate having a plurality of spaced apertures therein, a piezo electric crystal element having its lower face resting in contact with said metallic supporting plate, a separate metallic plate member for establishing connection with the upper surface of said piezo electric crystal element, a cord member wrapped through said apertured supporting plate and around said piezo electric crystal element and said metallic plate, and means for stretching said cord member taut for maintaining said piezo electric crystal element and said plate in definite relation to each other and in position with respect to said metallic supporting plate.

4. A piezo electric crystal holder comprising in combination an insulated housing carrying a metallic supporting plate, a pair of terminals mounted in said insulated housing, a piezo electric crystal element having its lower face lying in contact with said metallic supporting plate, a separate metallic plate for establishing connection with the upper face of said piezo electric crystal element, connections between said metallic supporting plate and said metal plate with said terminals, and a flexible cord member for centrally locating said piezo electric crystal element with respect to said housing and maintaining said metal plate in definite relation to said crystal.

5. A piezo electric crystal holder comprising in combination a housing of insulating material carrying a metallic support for a piezo electric crystal element, a separate metallic plate member for establishing electrical connection with the upper surface of said piezo electric crystal element, cord members passing around said piezo electric crystal element and said separate metallic plate, and a spring member pivotally mounted in one side of said housing and arranged to swing in a horizontal plane within said housing for engaging said cord members and stretching said cord members taut in a position above said piezo electric crystal element and said metallic plate member for preventing lateral displacement thereof while permitting free vibratory action of the piezo electric crystal element.

6. A piezo electric crystal holder comprising in combination a casing of insulating material, a pair of contacts projected from said casing, a stationary electrode member supported by said casing, a piezo electric crys-

tal element in contact with said electrode, a second movable electrode in contact with said piezo electric crystal element, and a system of flexible elements arranged around said piezo electric crystal element and said movable electrode for definitely locating the position of said movable electrode and said piezo electric crystal element in relation to said fixed electrode without restricting the vibrating movements of said movable electrode and said piezo electric crystal element in response to electrical impulses, and electrical connections between said movable and fixed electrodes and said terminals.

7. A piezo electric crystal apparatus comprising in combination, a conductive plate for supporting a piezo electric crystal element, a metallic plate for establishing electrical connection with the upper surface of said piezo electric crystal element and a flexible non-abrasive element embracing the peripheral edges of said metallic plate for maintaining said metallic plate and piezo electric crystal element in position relative to each other and said conductive plate without mechanical injury to said piezo electric crystal element from said flexible element.

8. A piezo electric crystal apparatus comprising in combination a conductive plate for supporting a piezo electric crystal element, a metallic plate for establishing electrical connection with the upper surface of said piezo electric crystal element and an adjustable non-abrasive restraining element embracing the peripheral edges of said metallic plate for maintaining said metallic plate and piezo electric crystal element in position relative to each other and said conductive plate without mechanical injury to said crystal element from said restraining element.

9. A piezo electric crystal apparatus comprising in combination a conductive plate for supporting a piezo electric crystal element, a metallic plate of substantially the same size and shape as said crystal element for establishing contact throughout the area of its upper surface and adjustable means embracing the opposite peripheral edges of said metallic plate for maintaining said metallic plate and piezo electric crystal element in position relative to each other and said conductive plate whereby the total effective area of said crystal element may be utilized.

10. A piezo electric crystal holder comprising in combination an insulating housing, a metallic plate member forming a closure for one end of said housing, a piezo electric crystal element supported on said metallic plate member, a contact plate for establishing electrical connection with the upper surface of said piezo electric crystal element, means for maintaining said crystal element and contact plate in operative position, and terminals connected to said metallic plate member and contact plate, and extending outward through the sides of said insulating housing.

ARTHUR M. TROGNER.