June 18, 1940. S. N. BUCHANAN 2,204,979

WIRE CONNECTOR

Original Filed March 13, 1937

FIG. 1

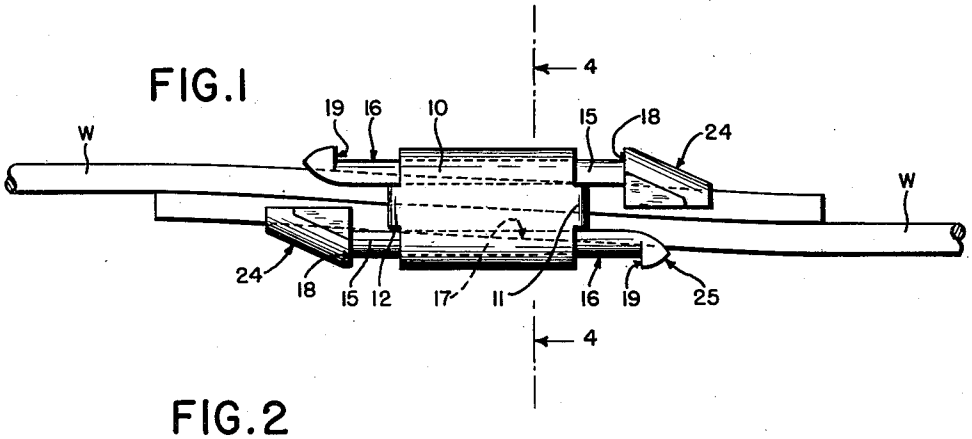

FIG. 2

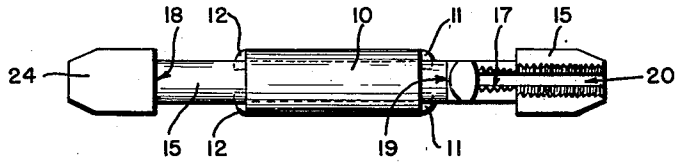

FIG. 3

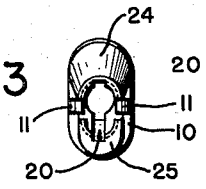

FIG. 4

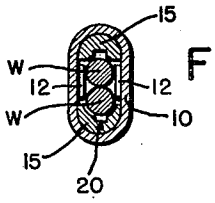

FIG. 5

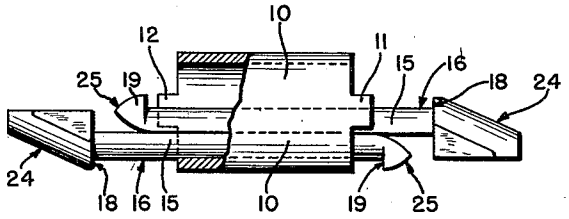

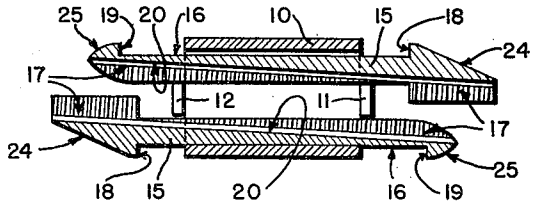

FIG. 6

INVENTOR
STEPHEN N. BUCHANAN
BY
Bohleber & Ledbetter
ATTORNEYS

Patented June 18, 1940 2,204,979

UNITED STATES PATENT OFFICE

2,204,979

WIRE CONNECTOR

Stephen N. Buchanan, Westmoreland Hills, Md., assignor to The Thomas & Betts Co., Elizabeth, N. J., a corporation of New Jersey

Original application March 13, 1937, Serial No. 130,681. Divided and this application May 4, 1939, Serial No. 271,663

3 Claims. (Cl. 24—126)

The invention relates to a wire connector for securing the ends of two wires together and in electrical contact with each other. The wire connector illustrated may also be used as a guy wire fastener by bending the end of a single wire around upon itself to form a loop upon the end of the wire. The two adjacent wire portions forming the loop are received and clamped within the wire connector so that the loop cannot pull open. The looped end of this guy wire is then secured to a stake or other structure in a manner known in the art.

This application is a division of Serial No. 130,681, filed March 13, 1937.

The principal object of the invention is to construct a new and novel wire connector having two wedges or clamping members which are slidably supported in spaced and approximately parallel relation with respect to each other and with the narrow ends of the wedges pointing in opposite directions, so that driving of the wedges in opposite directions with respect to each other clamps a wire or wires therebetween.

Another object of the invention is to construct a wire connector utilizing two opposed wedges or clamping members which are driven in opposite directions with respect to each other in order to obtain the maximum clamping action of the connector in which a tubular member is used to slidably retain the two clamping members in spaced relation and to prevent separation of the parts of the wire connector.

Another object of the invention is to construct a new and novel wire connector having opposed clamping members which are retained in a tubular member of very simple construction.

Other objects of the invention will be more apparent from the following description taken in connection with the accompanying drawing, illustrating preferred embodiments of the invention, in which:

Fig. 1 is a plan view of the assembled wire connector which is shown gripping the end of two wires in order to secure and electrically connect the wires together.

Figure 2 is a top view of the wire connector of Figure 1 with the wedge or clamping members in position ready to receive a wire or wires to be clamped therebetween.

Figure 3 is an end view of the wire connector, and inasmuch as the two ends thereof are identical, this figure may illustrate either end.

Figure 4 is a cross-section through the wire connector, taken on line 4—4 of Figure 1, and shows the two clamping members within the tubular member or means and clamping two wires therebetween.

Figure 5 illustrates the manner in which the clamping members are inserted within the tubular means or sleeve.

Figure 6 is a longitudinal section through the wire connector and illustrates the manner in which the slidable clamping members are retained in position within the tubular means or member.

The wire connector to be described herein utilizes two clamping members which are retained in a sleeve or tubular means and are driven in opposite directions therein and with respect to each other in order to obtain a clamping action. The wire connector uses a tubular means or sleeve for inseparably retaining the clamping members in spaced relation, but the latter are free to slide relatively with respect to each other and to the sleeve. In addition, the tubular member or sleeve is of simple construction and easily formed from sheet metal, or preferably from tubular stock, which enables the wire connector to be constructed at low cost.

Although the wire connector to be described herein is intended primarily to physically and electrically connect the ends of two wires, or adjacent portions of a single wire which has been bent to form a guy wire loop, it may be used to grip a single wire by making slight alterations in the proportions of the parts thereof and particularly in the size of the wire receiving space between the clamping surfaces, which alterations would be obvious.

The wire connector comprises a tubular means or member 10 having a bore therethrough which form guides to receive a pair of clamping members. The tubular means 10 is preferably a sleeve with each end thereof open and approximates an oval shape in cross-section. It may be formed from a cylindrical tubular member which is flattened into a general oval shape in which two sides are flat and the other two sides are preferably curved or semi-circular. The inner wall of each semi-circular side forms a slide for a clamping member, as will be described. A lug 11 may project from opposite flat sides of one end of the tubular means and a similar lug 12 may project from opposite flat sides of the other end thereof. The purpose of these lugs will be described more fully hereinafter.

A pair of wedging or clamping members 15 are received within the tubular means 10. These clamping members are alike and preferably are identical and consequently only one will be par-

ticularly described. The clamping member has an outer slide or sliding surface 16 which may be semi-circular, as shown, so as to conform with the semi-circular side of the sleeve 10, or it may be of any desired shape. An inner clamping surface 17 is also provided on the clamping member, which surface tapers with respect to the sliding surface 16 or tapers longitudinally of the clamping member. The clamping member is, therefore, a long wedge or taper.

Both ends of the clamping member have spaced shoulders or stops 18 and 19 which prevent excessive longitudinal movement with respect to the tubular means and also cooperate with the ends of the tubular means to retain the clamping members within the sleeve, as will be described more fully hereinafter. The stops 18 and 19 will engage spaced edges formed, in the illustrated embodiment, by the ends of the tubular means. The stops are spaced apart a greater distance than the spaced edges of the tubular means so that each clamping member may have a desired extent of longitudinal clamping movement therein. The clamping surface may have a longitudinal groove 20, if desired, to aid in gripping a wire thereagainst.

The wire connector illustrated is assembled by inserting the pair of wedging or clamping members 15 into the tubular means or member 10 so that the taper of each clamping member is directed oppositely with respect to the other. The clamping members are then positioned in opposite curved sides, or the top and bottom of the tubular means 10 with the sliding surface 16 of each clamping member in contact with its respective curved inner side thereof, whereupon the lugs 11 and 12 are bent inwardly so that they extend between the longitudinal edges of the two clamping members. These lugs retain each clamping member in parallel spaced relation with the other and in its respective side of the tubular means. The lugs, however, permit longitudinal sliding of each clamping member with respect to the tubular means and with respect to each other.

The spaced stops 18 and 19 engage the edges at the ends of the tubular means 10 so that the lugs and the stops together provide means to irremovably retain the clamping members and the tubular means or member in assembled relation. In other words, so long as the lugs are bent inwardly, the clamping members are retained within the sleeve against removal or separation.

The ends 24 and 25 of each clamping member are tapered so that each end of the wire connector, which is formed by the ends of the clamping members, may be pointed. The wire connector may be smoothly taped, after a wire or wires is clamped therein, when its ends are so pointed or tapered.

The wire connector described above clamps the ends of two wires therein in a manner now to be described. The ends of two wires W are inserted through the wire connector between the clamping surfaces 17 of the two clamping members 15 provided within the tubular means 10, after which the clamping members are forced or driven in opposite directions with respect to each other. This relative movement of the clamping members in opposite directions reduces the space between the clamping surfaces 17 so that the wires are clamped therebetween and in contact with each other. It is clear that if the wires snugly fit the space between the clamping surfaces 17, it may only be necessary to move one of the clamping members 15 relatively to the other in order to obtain effective clamping of the wire or wires therebetween.

A guy-wire loop may be formed with this wire connector by inserting the end of a wire through the wire connector between the clamping surfaces 17 and then the wire is doubled upon itself. The doubled end of the wire is then inserted through the wire connector in the other direction, or the wire connector itself may be moved as a unit towards the loop and upon the adjacent portions of the looped wire, so that these adjacent portions of the end of the wire are within the wire connector. Now upon forcing one wedging or clamping member 15 relatively to the other, or forcing both clamping members in opposite directions with respect to each other, the space between the clamping surfaces 17 of each clamping member is reduced because of the taper, and thereby the adjacent portions of the wire are gripped between the clamping members and in the wire connector.

This invention is presented to fill a need for improvements in a wire connector. It is understood that various modifications in structure, as well as changes in mode of operation, assembly, and manner of use, may and often do occur to those skilled in the art, especially after benefiting from the teachings of an invention. Hence, it will be understood that this disclosure is illustrative of preferred means of embodying the invention in useful form by explaining the construction, operation and advantages thereof.

What is claimed is:

1. A wire connector comprising a tubular means the ends of which form spaced edges and the interior thereof providing parallel guides, a pair of clamping members slidably carried within the tubular means, each clamping member having a clamping surface and a slide for engagement with the guide of the tubular means, the clamping surface tapering with respect to the slide, the clamping members being positioned within the tubular means so that the tapers formed by the respective slide and clamping surface extend in opposite directions, whereby forcing of the clamping members in opposite directions brings the clamping surfaces closer together to grip a wire or wires therebetween, stops adjacent the ends of each clamping member to engage the spaced edges of the tubular means and spaced apart a distance greater than the distance between the spaced edges of the tubular means, each clamping member having an edge parallel with the slide and each edge opposing that of the other clamping member, and means engaging the opposed edges of the clamping members to slidably retain the latter in spaced assembled relation with each other within the tubular means.

2. A wire connector comprising a tubular means the ends of which form spaced edges and the interior thereof providing parallel guides, a pair of clamping members slidably carried within the tubular means, each clamping member having a clamping surface and a slide for engagement with a guide of the tubular means, the clamping surface tapering with respect to the slide, the clamping members being positioned within the tubular means so that the tapers formed by the respective slide and clamping surface extend in opposite directions, whereby forcing of the clamping members in opposite directions brings the clamping surfaces closer together to grip a wire or wires therebetween, stops adjacent the ends of each clamping member to engage the spaced edges

of the tubular means and spaced apart a distance greater than the distance between the spaced edges of the tubular means, each clamping member having an edge parallel with the slide and each edge opposing that of the other clamping member, and at least one projection at each end of the tubular means bent inwardly to engage the opposed edges of the clamping members to slidably retain the latter in spaced assembled relation with each other within the tubular means.

3. A wire connector comprising a tubular member having two flat sides and two semi-circular sides, the ends of the tubular member forming spaced edges, a pair of tapering clamping members carried within the tubular member and slidable along the semi-circular sides, each clamping member having a clamping surface and a slide for engagement with the tubular member, the clamping surface tapering with respect to the slide, the clamping members being positioned within the tubular member so that the tapers formed by the respective slide and clamping surface extend in opposite directions, whereby forcing of the clamping members in opposite directions brings the clamping surfaces closer together to grip a wire or wires therebetween, stops adjacent the ends of each clamping member to engage the spaced edges of the tubular member and spaced apart a distance greater than the distance between the spaced edges of the tubular member, and lugs upon each flat side of the tubular member and upon each end thereof, the lugs being bent inwardly to engage the opposed edges of the clamping members to retain the clamping members spaced from each other and cooperating with the stops to irremovably retain the clamping members in the tubular member.

STEPHEN N. BUCHANAN.