April 20, 1926. 1,581,772

F. E. WILLIAMS

PUZZLE

Filed Feb. 6, 1924

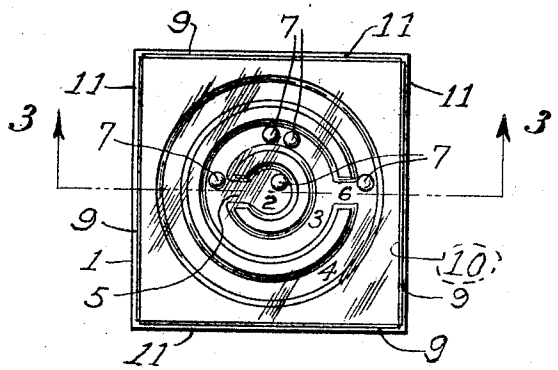

Fig. 1

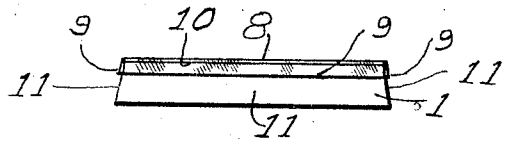

Fig. 2.

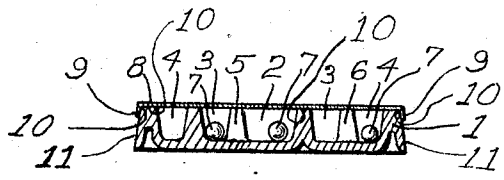

Fig. 3.

Inventor:

Frank E. Williams,

By Hugh K. Wagner,

Attorney.

Patented Apr. 20, 1926. 1,581,772

UNITED STATES PATENT OFFICE.

FRANK E. WILLIAMS, OF ST. LOUIS, MISSOURI.

PUZZLE.

Application filed February 6, 1924. Serial No. 690,928.

To all whom it may concern:

Be it known that I, FRANK E. WILLIAMS, a citizen of the United States, residing at the city of St. Louis, in the State of Missouri, have invented certain new and useful Improvements in Puzzles, of which the following is a specification.

This invention has to do with puzzles, and pertains more specifically to a novel construction of a popular form of puzzle familiarly known as "Tiddlywinks"; but may be applied to other uses of a similar nature.

The old form of this puzzle consists conventionally of a block or body constructed of paper board or tin plate or other suitable sheet material, and having therein a series of concentric annular grooves or recesses, connected together by staggered transverse passages or recesses, in which recesses are a number of lead pellets, the pellets and recesses being covered by a transpartent plate, such as glass or celluloid.

An object of the present invention is to fabricate the block of moldable material, thereby simplifying its construction and reducing its cost of manufacture. It is further contemplated that the moldable material be in the nature of confection, such as cake, candy, or chewing gum, so that the block may be chewed or eaten when it is no longer desired for use as a puzzle.

A further object is to substitute a material such as candy or the like for the lead used in the pellets, so that these pellets will be harmless in the event of their being swallowed, as might easily occur when such a toy is extensively used by children.

Another object is to substitute a cheaper material for the glass or celluloid employed in the transparent cover.

A further object is to employ such material for the block and cover as will readily adhere to one another.

Other objects and advantages will appear in the course of the following description.

In the accompanying drawings forming part of this specification, in which like numbers of reference denote like parts whenever they occur,

Figure 1 is a plan view of this invention;

Figure 2 is an elevational view of the same; and

Figure 3 is a sectional view taken on the line 3—3 of Figure 1.

The block 1 is molded of any suitable material, preferably paraffin, and contains the concentric annular grooves, depressions, or recesses 2, 3, and 4, a transverse or radial passage or recess 5 connecting grooves 2 and 3, and a transverse or radial recess 6 connecting grooves 3 and 4. Candy pellets 7 are movable through the passages 2, 3, 4, 5, and 6, and are held therein, in case of inversion or undue inclination of the block 1, by the transparent paper cover 8, secured to the paraffin block by the application of heat. The edges 9 of the cover 8 preferably extend beyond the edges 10 of the block 1, and are folded thereover and attached to the sides 11 of the block 1 for the purpose of securing more thorough adhesion between the block 1 and the cover 8. The object of the puzzle, of course, is to test one's ability to place certain of the balls or pellets in certain predetermined recesses. For instance, the problem may be to get all the pellets into the central recess. The paraffin block is preferably sweetened and may be used as a masticatory, such as chewing gum, and the candy pellets may be eaten, in the event that their use as elements in the puzzle is no longer preferred.

The transparent or translucent cover 8 is preferably of paper impregnated with paraffin, the paraffin in the paper being readily melted on the application of heat to join the cover to the block, and securing better adhesion than if non-paraffined paper were used, because of the union of the paraffin already in the paper with the paraffin of the block.

The combination of a paraffin block with paraffin-impregnated cover or the like may be useful for other purposes than that set forth herein. For instance, the paraffin block may have the form of a picture frame, the picture and cover of which may be paraffin-impregnated to secure them to the frame.

Having thus described this invention, I hereby reserve the benefit of all changes in form, arrangement, order, or use of parts, as it is evident that many minor changes may be made therein without departing from the spirit of this invention or the scope of the following claims.

I claim:

1. As a new article of manufacture, a puzzle comprising a block of palatable material provided with a recess thereon, and a confection movable in the said recess.

2. As a new article of manufacture, a confection novelty comprising a block of palatable material provided with a recess thereon, and a substantially transparent flexible cover for the said recess, the said cover overlapping the edge of said block and being folded thereover.

3. As a new article of manufacture, a confection novelty comprising a block of palatable paraffin-like material provided with a recess thereon, and a cover for the said recess and adhering to the said block.

4. As a new article of manufacture, a paraffin block provided with a recess thereon, and a flexible cover for the said recess and adhering to the said block, the said cover overlapping the edge of said block and being folded thereover.

5. As a new article of manufacture, a puzzle comprising an element of palatable material provided with a recess thereon, and a candy pellet in the said recess.

6. As a new article of manufacture, a block of masticatory provided with a recess thereon, a pellet in the said recess, and a cover for the said recess and adhering to the said block.

7. As a new article of manufacture, a block of masticatory provided with a recess thereon, a pellet in the said recess, and a transparent paper cover for the said recess.

8. As a new article of manufacture, a block of masticatory provided with a recess thereon, a candy pellet in the said recess, and a transparent paper cover for the said recess and adhering to the said block.

9. As a new article of manufacture, a paraffin block having secured thereto by the application of heat a paraffin-impregnated element.

10. As a new article of manufacture, a block formed of paraffin and having secured thereto a paraffined paper element by the union of the paraffin in the paper with the paraffin of the block.

In testimony whereof I hereunto affix my signature.

FRANK E. WILLIAMS.