Aug. 7, 1956 J. S. DALE 2,757,549

ENGINE SPEED CHANGE CONTROL

Filed March 16, 1951

Fig. 1

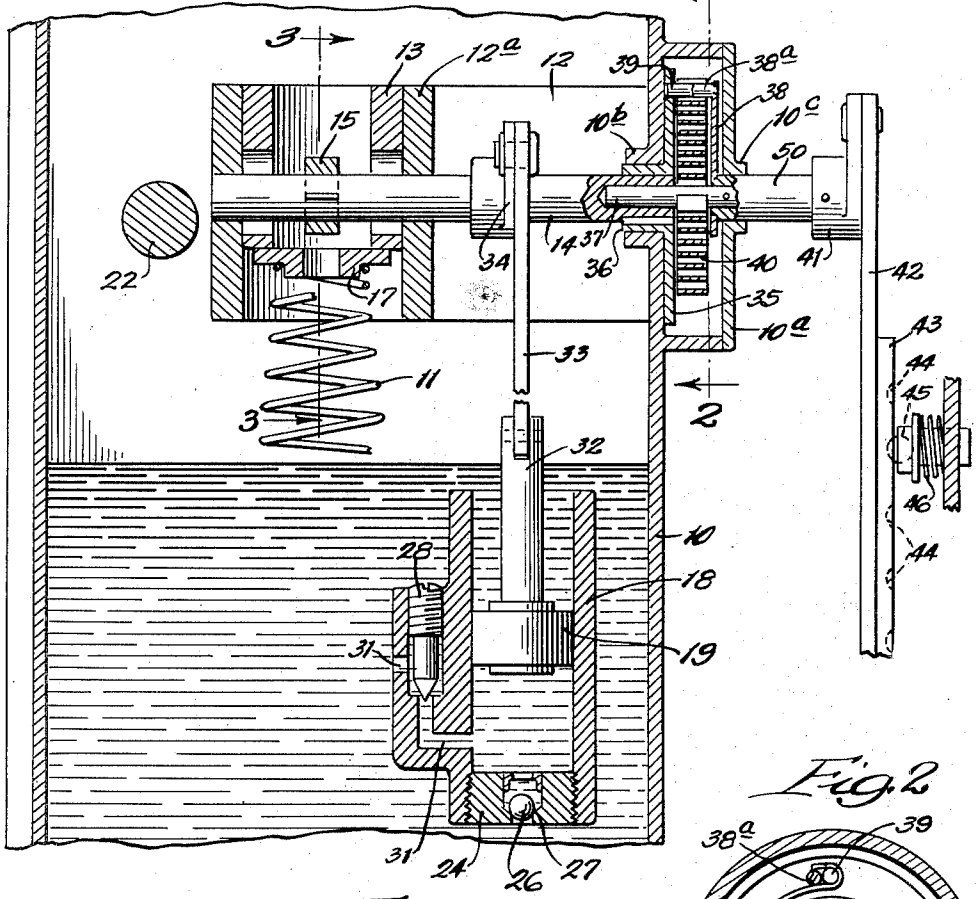

Fig. 2

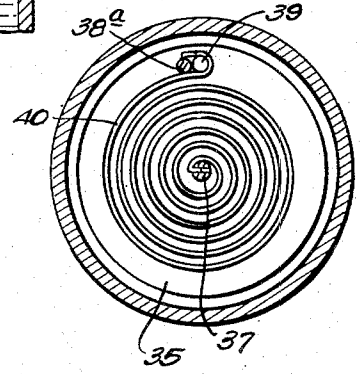

Fig. 3

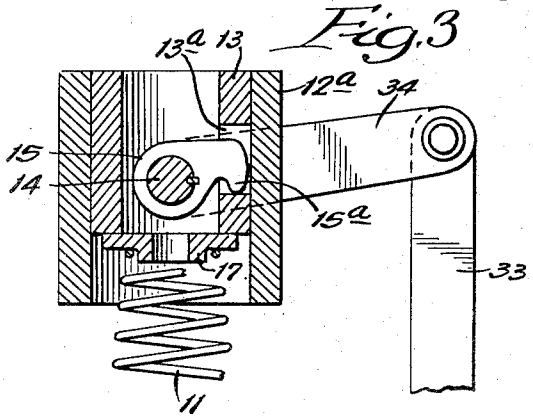

INVENTOR:
Joseph S. Dale,
BY
Dawson & Owns,
ATTORNEYS.

United States Patent Office

2,757,549

Patented Aug. 7, 1956

2,757,549

ENGINE SPEED CHANGE CONTROL

Joseph S. Dale, Rockford, Ill., assignor to Dale Hydraulic Controls, Inc., Rockford, Ill., a corporation of Illinois

Application March 16, 1951, Serial No. 215,924

7 Claims. (Cl. 74—470)

This invention relates to engine control apparatus; in particular, it concerns improved apparatus for changing the speed of an engine at the rate best adapted for good engine performance.

Diesel engines are used extensively in modern industry in a great variety of variable-speed applications. Many of these applications involve the use of stationary engines, and many others involve diesel engines employed for the propulsion of vehicles—trucks, locomotives, self-propelled railroad cars, and so on. As is well known to persons familiar with diesel engine operation, the fuel-air ratio is rather critical, and an oversupply of fuel introduced suddenly into the cylinders will result in incomplete combustion and the discharge of black smoke from the exhaust. Incomplete combustion also results in lack of power, and, as an aftermath, it will foul the valves and other engine parts with an objectionable carbon residue which must periodically be cleaned out.

The conditions just described are encountered particularly in supercharged engines, since the supply of air available for combustion in such engines is usually directly dependent upon the speed of the supercharger, and hence on the speed of the engine itself. In such engines, therefore, any sudden increase in the supply of fuel delivered to the cylinders is almost certain to produce an interval in which combustion is incomplete.

For good operation, then, acceleration of diesel engines—particularly supercharged diesel engines—must be accomplished gradually, with the fuel supply increased in small increments. A skilled operator who understands the requirements of the engine can accelerate successfully with a conventional hand-operated fuel control, by moving it from its original position to the position desired slowly, the fuel supply being increased only at that rate at which the air supply increases. This maintains the fuel-air ratio near its optimum value throughout the acceleration process.

Skill and experience are not always available, however, and diesel engines are often entrusted to operators having little conception of engine-operating requirements. It is accordingly the major object of this invention to provide a speed-change means which can be operated manually without special care or dexterity and which will automatically control the rate of speed change to maintain optimum engine performance. Another object of my invention is to provide a manual speed-change means wherein the manual control may be moved immediately from one speed position to another but wherein the actual response of the engine to the new speed position occurs at an automatically controlled rate which is independent of the will of the operator. Other objects and advantages will appear as the specification proceeds.

In the accompanying drawings, I have illustrated my invention in a typical embodiment wherein it is operated in conjunction with, or as a part of, an engine governor. It is in that environment that my invention will

usually be used, since diesel engines of substantial horsepower are nearly always governor-controlled. In such engine installations, the manually-operable speed control is usually a mechanical structure permitting variation of the tension in the governor speeder spring. The speed of the engine is by the governor held at a value proportional to the speeder spring tension, the actual amount of fuel supplied to the engine being adjusted automatically with changes in engine load. While the illustrated environment is the most frequent manner of application of my invention, it will be understood, however, that my invention is not limited to governor-controlled engines but can be employed equally well with engines wherein the fuel supply control is directly actuated by manual mechanism.

In the drawing, Figure 1 is a semi-diagrammatical sectional view, in a vertical plane, of an engine governor equipped with the present invention; Fig. 2 is a transverse sectional view taken along the line 2—2 of Fig. 1; and Fig. 3 is a fragmentary sectional view taken along the line 3—3 of Fig. 1.

In the engine governor shown generally in the drawings, the governor casing is generally denoted **10**, and the output shaft, whose rotation will normally accomplish changes in fuel supply to the engine, is denoted **22**. The details of the engine governor are not shown in the drawing, since they may be conventional and are not involved in the present invention. All governors of the type shown contain a speed-responsive centrifugal element associated with a speeder spring which, in the present drawing, is denoted **11**. The speed-responsive element, by hydraulic or other suitable means, changes the fuel supply to the engine, by appropriate rotation of shaft **22**, in the manner appropriate to maintain the engine speed at a constant value. The "controlled speed"—that is, the speed at which the governor will hold the engine—is determined by the degree of tension of the speeder spring **11**. Such governors, therefore, normally include a manually-controllable mechanical arrangement for varying within rather wide limits the tension of the speeder spring.

It will be understood in the present case that governor **10** may be of any suitable construction conforming generally to the characteristics just described. Since the present invention is concerned entirely with the means for adjusting the tension of the speeder spring, the other governor details need not be, and have not been, shown.

Any suitable mechanical structure for adjusting speeder spring tension may be employed. In the present case, I have shown such adjusting means mounted on the casing **10** and on an inwardly-projecting frame extension member **12**, which may be cast or bolted into integral association with the casing proper. At its innermost end, extension **12** carries a cylindrical terminal portion **12***a*, the interior of which is machined smooth to receive an annular piston **13**. Piston **13** is slotted to provide passageway for a control shaft **14** which is journaled into bearings provided in the walls of cylinder **12***a*. Shaft **14** carries and has keyed to it a cam member **15** which is carried within the interior of piston **13**, except that a projecting finger **15***a* of cam member **15** enters and rests upon the lower face of a slot **13***a* provided in the side wall of annular piston **13**. Piston **13** rests upon a spring seat **17** which serves as the upper anchor for speeder spring **11**. The lower end of speeder spring **11** is, it will be understood, seated in association with a centrifugal speed-responsive member (not shown) as already herein described.

The structure just described, carried within cylinder **12***a*, will, it may be seen, move spring seat **17** upward or downward responsively to rotation of shaft **14**, and thus permit the tension of spring **11** to be varied.

In a sub-casing **18**, cast with or otherwise secured to frame **10** at any convenient location within the governor casing, I have provided an adjustable dashpot, shown in Fig. 1. The inner surface of sub-casing **18** is machined to provide a cylinder, and mounted for reciprocal movement therewithin is a piston **19**, machined for a snug sliding fit within cylinder **18**. At the lower end of cylinder **18**, in a plug which, for convenience in assembly, I have shown in threaded engagement with cylinder **18**, I provide a ball valve **26**, cooperating with a tapered seat **27** in plug **24**. An exit or vent passage **31** connects the lower portion of cylinder **18** to the interior of the governor casing, which is filled with oil and serves as a sump or oil reservoir. An adjustable needle valve **28**, shown in Fig. 1, provides a variable restriction in vent passage **31**. The upper end of cylinder **18**, as shown, is open to the oil reservoir or sump.

Piston **19** carries rigidly mounted thereon a piston rod **32**, pivoted in turn to a link **33** which is itself pivoted to a crank **34** carried on and keyed to shaft **14**, as shown best in Fig. 1.

Shaft **14** passes through the wall of casing **10** and terminates a short distance therebeyond, as may be seen in Fig. 1. Carried on and keyed to shaft **14** at its outer end is a disc **35**, provided with a central portion **36** journaled within a suitable bearing **10***b* formed in casing **10**.

On the outer surface of casing **10**, a pill-box housing **10***a* is mounted coaxially with bearing **10***b*. A bearing **10***c*, also coaxial with bearing **10***b*, is provided in the outer face of pill-box housing **10***a*; bearing **10***c* supports a shaft **50** which carries a centering pin **37**. Pin **37** rides within a bore in the end of shaft **14** adapted to receive it, but pin **37** is free to turn independently of shaft **14**. The full-diameter portion of shaft **50** terminates just inside pill-box housing **10***a*, and it carries on its inner end a rigidly affixed arm **38**. Arm **38** has at its outer end a pin **38***a* extending therefrom at right angles.

A spring seat or pin **39** is secured to disc **35** at a point near its rim, and a coil spring **40**, anchored at its inner end within a centering pin **37**, is seated at its outer end on pin **39**. Spring **40** is a relatively "stiff" spring. Normally pin **39** bears upon pin **38***a* by the initial tension of spring **40**. This position is shown in Fig. 2.

It will be understood that suitable lubrication is provided for bearings **10***b* and **10***c* to permit rotation of shafts **50** and **14** without excessive friction. An antifriction bearing may be provided at bearing **10***b*, if desired, although it is not normally necessary.

Any desired means may be provided for rotating shaft **50** and for yieldably holding the same in a plurality of predetermined positions. In some cases, this may be accomplished merely by providing a dial or knob on the outer end of shaft **50**, such dial or knob being provided with a spring detent mechanism or other conventional means for giving it a series of stable positions. Usually, however, engine speed control means are provided in the form of a lever which can be moved forward and backward. This custom is probably a hang-over from the throttle lever traditionally employed on steam locomotives. I have, accordingly, shown in the drawing, for illustrative purposes, a lever arrangement for rotating shaft **50**. It will be understood, of course, that this is entirely a matter of choice. In the drawing, I show a crank member **41** keyed to shaft **50** at its outer end. Crank member **41** is pivoted to a link **42** which may, at its opposite end, be pivoted to a suitable speed-control lever (not shown). A detent plate **43** is secured to the side of link **42**, plate **43** carrying a plurality of indentations **44**, normally shaped to provide a firm seat for a ball detent. A suitable ball **45** is provided for cooperation with recesses **44**, it being urged against plate **43** by a spring **46**, as shown. Spring **46** may be anchored to any suitable stationary element.

In the operation of my invention, it may be assumed that the engineer has been operating at a low speed, and that the operator desires to increase its speed to a substantially higher speed. To accomplish this, he will grasp the speed-control lever and move it in the higher-speed direction several "notches." This will result in immediate movement of link **42** in the downward direction as viewed in Fig. 1, with resultant counter-clockwise rotation of shaft **50** (as viewed from outside the governor casing). The rotation just described will occur without any particular effort on the part of the operator, and will, to him, occur without time delay. The rotation of shaft **50**, however, will not accomplish a corresponding immediate rotation of shaft **14**. The effect of rotation of shaft **50** will be to place spring **40** under further stress and to move pin **38***a* away from pin **39**. At the instant the speed-control lever is moved, shaft **14** will not rotate at all because instantaneous rotation in the counter-clockwise direction is prevented by dashpot **19**. The stored energy in spring **40** will cause a downward force on dashpot **19**, which in turn will result in an immediate flow of oil out of cylinder **18** and into the oil reservoir through channel **31**, the rate of such flow being governed by the setting of adjustable needle valve **28**. As oil flows out of cylinder **18**, shaft **14** will rotate, such rotation continuing until spring **40** has rotated shaft **14** to the position in which pin **39** is again in contact with pine **38***a*.

The time delay thus introduced between the movement of the speed-control lever and the response of the engine governor is fully within the control of the engineer in general charge of the engine, since he can adjust valve **28** to a setting which will give the most rapid response consistent with maintenance of good combustion conditions in the engine.

Deceleration of the engine, in the form of the invention illustrated, can be accomplished without any appreciable time-delay, since ball valve **26** will permit very rapid oil flow into cylinder **18** when dashpot **19** is rising. As a result, dashpot **19**, when moving upward, offers no appreciable opposition to the rotation of shaft **14**, pin **38***a* abuts pin **39**, and shafts **50** and **14** rotate as one in the clockwise direction.

If, in a particular case, good engine operation should require that slow-downs be accomplished gradually, it will be obvious to those skilled in the art that the dashpot structure could be readily modified to provide controlled time-delay in both directions.

While I have in this specification described in considerable detail, for illustrative purposes, a single embodiment of my invention, persons skilled in the art will understand that many variations in detail may be made therein without departing from the spirit of my invention. It is accordingly my desire that the scope of my invention be determined primarily by reference to the appended claims.

I claim:

1. In apparatus for limiting the maximum rate at which the speed control member of a prime mover can be moved in a direction to increase the speed of the prime mover while permitting free movement of the control member in the opposite direction to reduce the prime mover speed at a rate determined by the operator, a rotatably-mounted shaft, means arranged with said shaft to change the speed setting of said control member upon rotation of the shaft, mechanical time-delay means connected to said shaft for limiting the rate of rotation thereof in a direction to increase the speed setting of said control member and being adapted to permit rotation of said shaft in the opposite direction at a rate determined by the operator, said shaft being equipped at its outer end with a laterally-extending flange having a pin extending forwardly therefrom and providing a spring seat, a manually-operable rotatably-mounted shaft extending forwardly of said first-mentioned shaft and in substantially axial alignment therewith and being equipped at its inner end with a laterally-extending flange having a pin extend-

ing rearwardly therefrom in substantially parallel alignment with said first-mentioned pin, said pins being spaced at equal radial distances from the rotational axis of said shafts and said second-mentioned shaft being equipped with a spring seat at its inner end, and a substantially spiral spring having the turns thereof all lying substantially in the same plane and being secured at its inner end to the spring seat of said second-mentioned shaft and at its outer end to said first-mentioned pin, whereby when said second-mentioned shaft is rapidly rotated in a direction to increase the prime mover speed, said time-delay means restrains appreciable movement of said first-mentioned shaft and said spring tightens and thereby stresses and rotates said first-mentioned shaft against the resistive force of said time-delay means after movement of said second-mentioned shaft, while upon reverse rotation of said second-mentioned shaft said second-mentioned pin abuts said first-mentioned pin and rotates said first-mentioned shaft at the same rate as said second-mentioned shaft.

2. The apparatus of claim 1 wherein the time-delay means is a dashpot, and an adjustment is provided to vary the time-delay of the dashpot.

3. In control apparatus of the character described, a rotatably mounted shaft, means arranged with said shaft for resisting the free rotation thereof in one direction to retard the rate of that rotation but being substantially ineffective to limit free rotation thereof in the opposite direction, a movable control member comprising a control shaft in substantial axial alignment with said first-mentioned shaft, a spiral spring coupling between said shafts and with the turns thereof lying in substantially the same plane, said spring being yieldable to store energy upon rotation of said control shaft to rotate said first-mentioned shaft in said one direction and to thereafter dissipate the energy in rotating said first-mentioned shaft in that one direction against said means, and means for coupling positively said control shaft and said first-mentioned shaft upon rotation of said control shaft to move said first-mentioned shaft in said opposite direction, whereby the rate of rotation of said first-mentioned shaft in one direction is substantially independent of said control shaft but is directly dependent thereon in said opposite direction.

4. The structure of claim 3 wherein said last-mentioned means comprises a pin carried by said first-mentioned shaft and spaced laterally therefrom, and a post carried by said control shaft and spaced axially therefrom, said pin being adapted to be abutted by said post when said control shaft is rotated in one of its directions.

5. In apparatus of the character described, a movable responsive member, means arranged with said responsive member for resisting the free movement thereof in one direction to retard the rate of that movement but being substantially ineffective to limit free movement thereof in the opposite direction, a movable control member, a coupling between said responsive and control members and being yieldable to store energy upon movement of said control member to move the responsive member in said one direction and to thereafter dissipate the energy in moving said responsive member in that one direction against said means, and means for coupling positively said control and responsive members upon movement of said control member to move said responsive member in said opposite direction, whereby the rate of movement of said responsive member in one direction is substantially independent of said control member, but is directly dependent thereon in the opposite direction, said second mentioned means comprising a pin carried by said movable responsive member and a post carried by said movable control member, said pin being adapted to be abutted by said post when said control member is moved in a direction to move said responsive member in the aforesaid opposite direction.

6. In control apparatus, a shaft supported for rotation about the longitudinal axis thereof, means coupled with said shaft for retarding rotation thereof in one direction, a control shaft lying along the longitudinal axis of said first mentioned shaft and being rotatable with respect thereto, a coil spring for providing a coupling between said shafts and being yieldable to store energy upon rotation of said control shaft in a direction tending to rotate said first mentioned shaft in the aforesaid one direction and to thereafter expend the stored energy in rotating the first mentioned shaft in that one direction against the retarding action of said means, and means providing a positive coupling between said shafts upon rotation of said control shaft in a direction tending to move said first mentioned shaft in a direction opposite to the aforesaid one direction, whereby the rate of rotation of said first mentioned shaft in the aforesaid one direction is substantially independent of the rate of rotation of the control shaft, but the rate in the opposite direction is directly dependent upon the rotational rate of said control shaft.

7. The control apparatus of claim 6 in which said coil spring at one end thereof is fixed to said control shaft and at the other end thereof is connected with said first mentioned shaft, and in which said means for positively coupling said shafts comprises a pin carried by one and a post carried by the other.

References Cited in the file of this patent

UNITED STATES PATENTS

431,124	Rae	July 1, 1890
1,127,012	Kagi	Feb. 2, 1915
1,524,028	Goode	Jan. 27, 1925
1,691,579	Melcher	Nov. 13, 1928
1,750,361	Rothemel et al.	Mar. 11, 1930
1,790,443	Ricardo	Jan. 27, 1931
1,917,486	Beck	July 11, 1933
2,090,246	Alexander	Aug. 17, 1937
2,250,982	Adler	July 29, 1941
2,250,984	Adler	July 29, 1941
2,274,227	Willard	Feb. 24, 1942
2,356,202	Benjamin	Aug. 22, 1944
2,453,651	Mock	Nov. 9, 1948
2,503,946	Hallett	Apr. 11, 1950
2,521,759	Sorensen	Sept. 12, 1950

FOREIGN PATENTS

504,270	Great Britain	Apr. 24, 1939
847,902	France	July 10, 1939