US00D341659S

United States Patent [19]

Homayoun et al.

[11] **Patent Number: Des. 341,659**

[45] **Date of Patent: ** Nov. 23, 1993**

[54] **WRIST-WORN CARDIAC MONITOR**

[75] Inventors: **Habib Homayoun**, Aloha; **Howard M. Meehan**, Beaverton; **Robert A. Bedient; Kenneth H. Pierce**, both of Portland, all of Oreg.

[73] Assignee: **Instromedix, Inc.**, Hillsboro, Oreg.

[**] Term: **14 Years**

[21] Appl. No.: **820,056**

[22] Filed: **Jan. 9, 1992**

[52] **U.S. Cl.** **D24/167**

[58] **Field of Search** D24/167, 165, 186; 128/690, 689, 706, 710, 725

[56] **References Cited**

U.S. PATENT DOCUMENTS

D. 269,546	6/1983	Rogers et al.	D24/167
D. 287,403	12/1986	Kiiski et al.	D24/167
3,972,320	8/1976	Kalman .	
4,108,166	8/1978	Schmid .	
4,256,117	3/1981	Perica et al. .	
4,295,472	10/1981	Adams	128/690
4,406,290	9/1983	Walbeoffe-Wilson et al.	128/690 X
4,409,983	10/1983	Albert .	
4,425,921	1/1984	Fujisaki et al. .	
4,799,491	1/1989	Eckerle .	
4,802,488	2/1989	Eckerle .	
4,928,690	5/1990	Heilman et al. .	
4,938,228	7/1990	Righter et al. .	
5,197,489	3/1993	Conlan	128/690 X

FOREIGN PATENT DOCUMENTS

2920965	11/1979	Fed. Rep. of Germany	128/690

OTHER PUBLICATIONS

"Inventors of Heart Monitor Tick Toward Prosperity . . . " (Oregon Business Journal), Brock, Sep. 17, 1990.

Primary Examiner—Stella Reid

Attorney, Agent, or Firm—Kolisch Hartwell Dickinson McCormack & Heuser

[57] **CLAIM**

The ornamental design for a wrist-worn cardiac monitor, as shown and described.

DESCRIPTION

FIG. **1** is an isometric view, slightly enlarged relative to FIGS. **2** through **6**, of a wrist-worn cardiac monitor showing our new design;

FIG. **2** is a right side elevational view, with a wrist band being shown in broken lines for illustrative purposes only;

FIG. **3** is a front elevational view, the rear elevation being a mirror image thereof, with a wrist band being shown in broken lines for illustrative purposes only;

FIG. **4** is a top plan view;

FIG. **5** is a left side elevational view; and,

FIG. **6** is a bottom plan view.

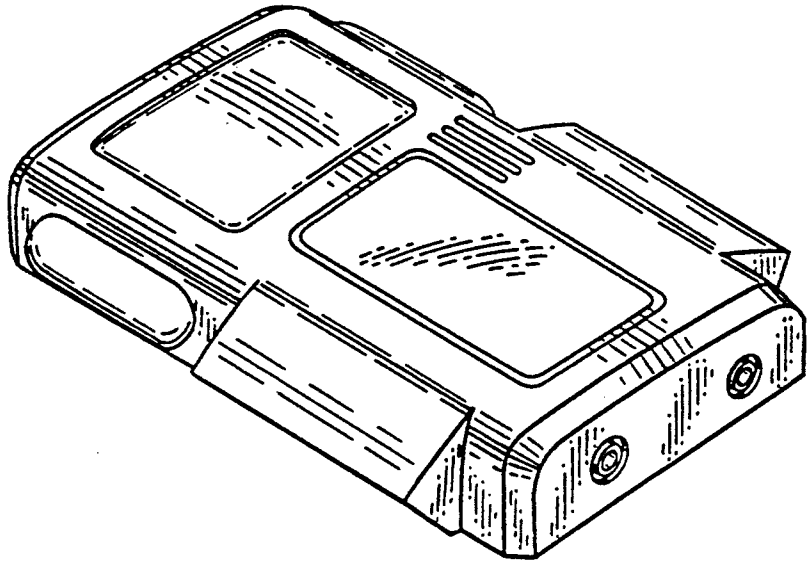

FIG. 1

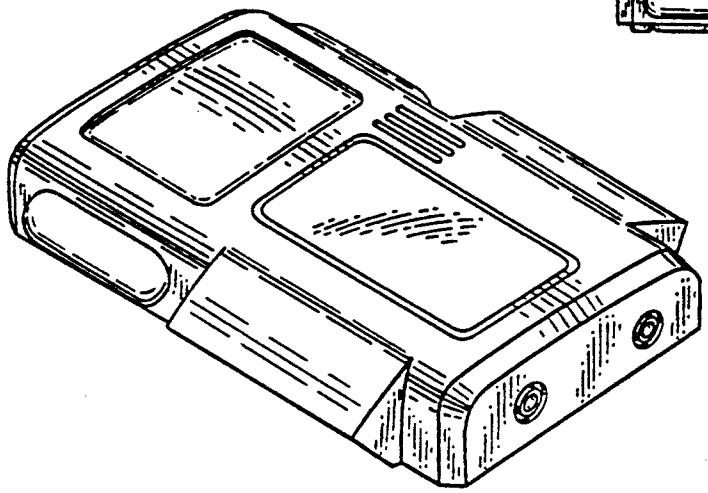

FIG. 3

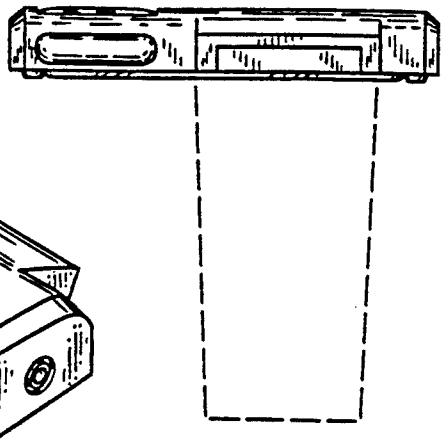

FIG. 2

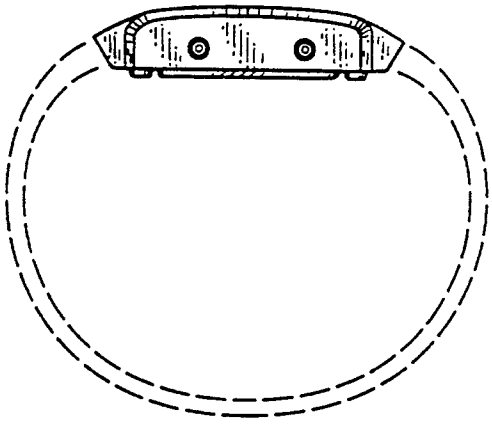

FIG. 4

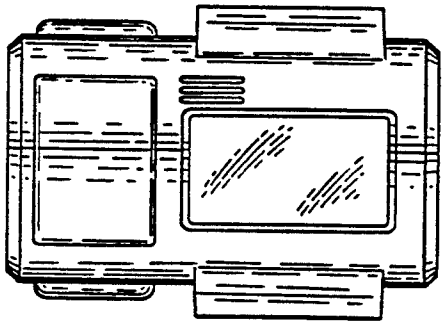

FIG. 6

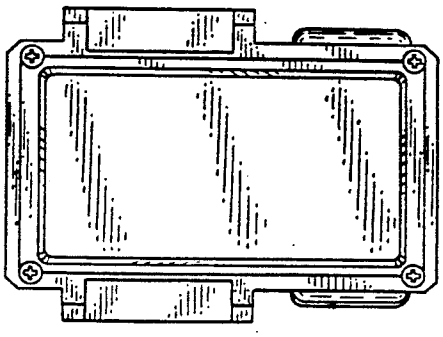

FIG. 5

