July 8, 1941. J. D'ARCEY 2,248,813

ART OF REFRIGERATION

Filed Jan. 27, 1940

Fig. 1.

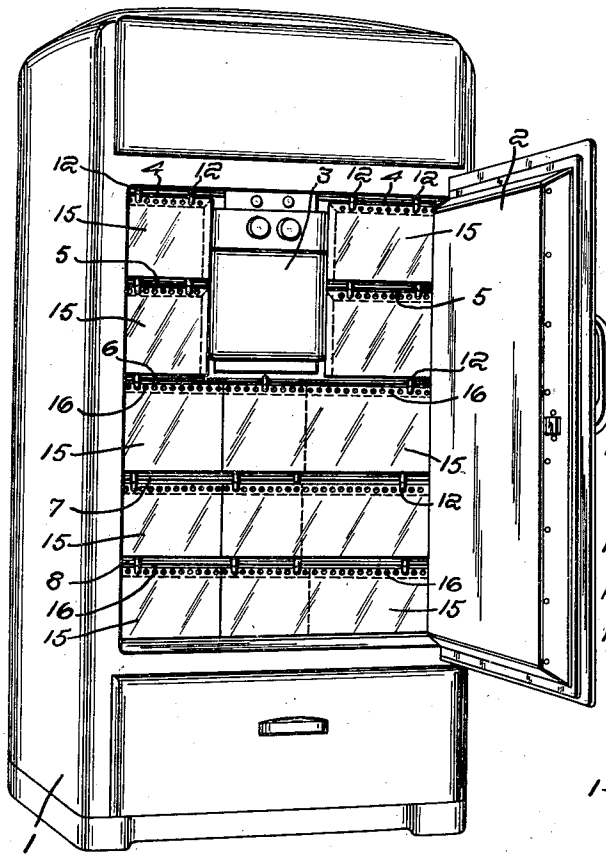


Fig. 2.

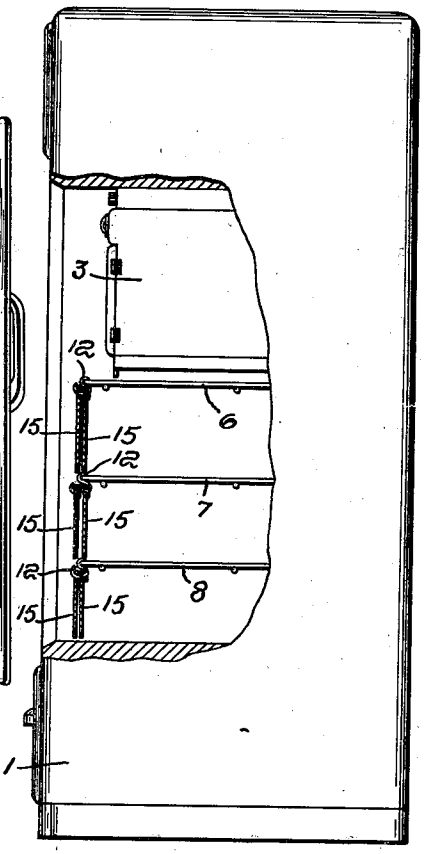


Fig. 3.

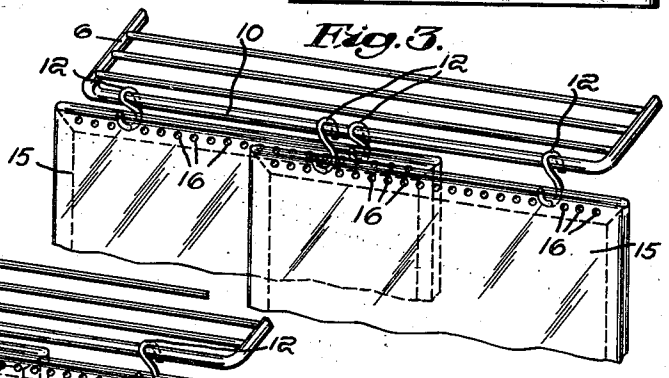


Fig. 4.

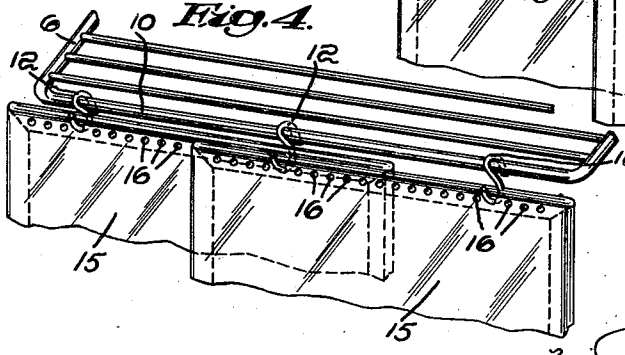


Inventor:
John D'Arcey
By James A. Hodder
Attorney

Patented July 8, 1941 2,248,813

# UNITED STATES PATENT OFFICE

2,248,813

## ART OF REFRIGERATION

John D'Arcey, Swampscott, Mass.

Application January 27, 1940, Serial No. 315,999

1 Claim. (Cl. 312—189)

My present invention is a novel and improved method of and device for use in refrigerators, and is particularly intended for attachment to and use with household and other refrigerators.

In the ordinary use of a household or other refrigerator, it is customary to open the door a great many times to put in or remove articles, as well as to inspect and adjust the same. Each time the door is thus opened, warm air flows in and raises the temperature within the refrigerator, thus requiring the cooling unit to operate, particularly where an electric current is utilized for the cooling unit, and repeated or almost continual operation of the cooling unit is required.

Also as it is customary to have household refrigerators installed directly in kitchens and often adjacent a kitchen stove or range, thus still further causing extreme variations of temperature within the refrigerator when the door is open, and requires constant operation of the cooling unit, thereby greatly increasing the expense of operations, as well as tending to deteriorate the efficiency and preservative action of the same thru such constant variations in temperature. Furthermore, this difficulty even tends to cause deterioration of the food contained within the refrigerator.

Thus, an important object of my present invention is to obviate the difficulties outlined above and to provide a novel, simple, and efficient method for largely eliminating such temperature variations within the refrigerator due to the opening of the door, and to provide simple and efficient means which will be readily attachable to existing refrigerators and to permit inspection of all articles contained therein, while maintaining an even temperature, thus preserving the contents and saving the operation of the cooling unit.

Furthermore, my present invention permits a ready access to any shelf, or portion of the shelf, within the refrigerator to apply or remove articles therefrom without lowering the temperature of the adjacent sections of the refrigerator to any substantial extent.

I carry out my present invention by providing a plurality of transparent attachable, adjustable, and readily removable screens or curtains made of suitable material to preserve the hygienic qualities of the food articles contained within the refrigerator, and permitting individual access to each part or portion, as desired.

Furthermore, my present invention contemplates the advantages of having the transparent screen or curtain preferably operated so that it will automatically return to the protecting and screening position after the same has been temporarily raised or lifted to permit access behind the same.

Preferably, I utilize a thin sheet of transparent material, such as Celluloid for example, unbreakable, very thin, fully transparent, strong, and can be readily made to fit by cutting or trimming with scissors, if desired, and will maintain its screening, protecting or curtain-like position by its own weight. Thus, when applied to a shelf, or shelves of a refrigerator, preferably by attachable and detachable hangers, one of such screens can be readily lifted to permit access behind the same while the others remain in position; and when the lifted screen is released, it will automatically drop back into screening or curtaining position. A plurality of such sections may be utilized widthwise of a single shelf so as to allow access to one part only of the shelf, if desired.

This capacity for individual and temporary removal of a transparent screen prevents the initiation of any air flowing thru and around the interior of the refrigerator when the door is opened, thereby effectively preventing the inflow of warm air into the interior of the refrigerator and, hence, eliminating the danger of raising the temperature within, causing the cooling unit to be operated, and affecting the preserving qualities of the refrigerator by the constant variations in temperature which heretofore occurred and were objectionable, as above briefly outlined.

While my invention is particularly useful and valuable in connection with electric- or gas-operated refrigerating units because of the saving in expense in utilizing the power to operate the same, yet my novel method of screening and the devices therefor are also advantageous in the standard type of ice-holding refrigerator as tending to maintain a substantially uniform temperature within the refrigerator, thereby benefiting the food contents and giving full effect to the hygienic qualities of my transparent, removable, and adjustable screen or curtain structure.

Referring to the drawing illustrating a preferred embodiment,

Fig. 1 is a view in perspective of a standard type of refrigerator with a cooling unit fitted therein, and illustrating my invention;

Fig. 2 is a side view of a refrigerator with a portion of the side broken away to illustrate my novel curtain structure;

Fig. 3 is an enlarged fragmentary view in per-

spective showing a pair of curtains for a single shelf or compartment, positioned to slide relatively with each other, and

Fig. 4 is a similar fragmentary perspective view illustrating such a pair of curtains united into a single shielding or screening unit.

As shown in the drawing, a typical household refrigerator is indicated at 1, having a door 2, refrigerator unit 3, and a plurality of shelves indicated at 5—5 at each side of the refrigerating unit 3, and a series of shelves 6, 7, and 8 extending widthwise of the refrigerator to receive and hold articles to be contained within the refrigerator. Such shelves are usually of openwork wire or metal to be strong, light, and to facilitate cleaning, as well as to permit air circulation within the refrigerator. Rods 4—4 are fitted at the top above the shelves 5—5.

By my method of preventing access and circulation of exterior warm air to the interior of the refrigerator when the door 2 is opened, I thus maintain the advantages of interior circulation when the refrigerator door is either closed or open and thereby maintain a substantially uniform temperature within the refrigerator at all times.

For this purpose, I provide a set or series of thin transparent material, such as Celluloid, attaching the same in any suitable manner to the front of the shelves to which they are fitted. In the case of the standard type of openwork shelf, such as shown in Figs. 3 and 4, these shelves have a front rod 10 to which a series of S-hooks 12 may be applied, engaging and holding the screen to the front of the rod 10, by having the lower end of the S-hook 12 pass thru recesses in the screen. I have here shown for illustrative purposes a Celluloid screen member 15, with a series of perforations or holes 16 in the upper edge thereof, in which the lower part of a pair of S-hooks 12—12 may be fitted to support the same and permit the screens 15 to be swung or lifted on the S-hooks to be raised for access behind the same. The rods 4—4 are to support the S-hooks and screens for the articles on the topmost shelves 5—5.

Such screens 15 can be readily cut or trimmed to fit the size shelf both widthwise and lengthwise, as will be readily appreciated. I may also apply a plurality of such screens 15 widthwise of the shelf, thus enabling the two screens to be slid or telescoped for access behind either, or to be raised and swung on the S-hook pivots 12—12.

In Fig. 3 I have illustrated two screens 15 of less length than the width of the shelf to which they are attached, each screen being secured by a pair of S-hooks 12 so that they may be slid together or telescoped for access behind one part of same. Or these two screens 15 may be joined by an S-hook, as shown in Fig. 4, thus giving an automatic adjustment for the width of the shelf to which they are attached and they can be raised or lifted together to give access behind the same, as will be readily appreciated.

In refrigerating constructions where solid shelves are employed, a rod can be readily fitted for attachment of the pivotal S-hooks thereto and, hence, for the attachment and operation of the screens 15.

My invention thus maintains the temperature evenly within a refrigerator when the door is opened, permits full accessibility of the contents of each shelf, and readily admits removal of articles therefrom or replacement therein by a simple lifting or sliding of the screening elements, preventing the initiation of warm air circulating within the refrigerator when the door is opened, thereby preserving the contents, eliminating constant operation of the cooling unit, and saving a large percentage of the expense of operation.

My removable, adjustable, and readily operable screens or curtains being of thin transparent and, preferably, unbreakable material, such as Celluloid, cellophane, or the like, can be quickly removed for cleaning, replaced, and occupy no otherwise available room within the refrigerator.

Various modifications and materials may be utilized if desired, and a greater number of sections widthwise of the refrigerator or lengthwise of the shelves can be employed, if desired.

While my invention is primarily intended for use in household refrigerators, it is of course equally advantageous and applicable to large refrigerating or storage plants, and to ice-cooled as well as artificially cooled refrigerators.

I claim:

In refrigerating apparatus of the kind described, having a shelf, said shelf having its outer edge adapted to receive a plurality of S-hooks, with one end of the hook slidable on the edge of said shelf, a plurality of transparent, non-breakable, screening elements mounted in overlapped arrangement, said screening elements having a plurality of holes along an edge portion thru which the lower parts of said S-hooks extend, whereby said screening elements are arranged for sliding longitudinally on said shelf individually, or may be united by said overlapping and interlocking with an S-hook for swinging movement as a unit.

JOHN D'ARCEY.