May 22, 1934. R. C. COXHEAD 1,959,779

CALCULATING MACHINE

Filed Sept. 13, 1924 3 Sheets-Sheet 1

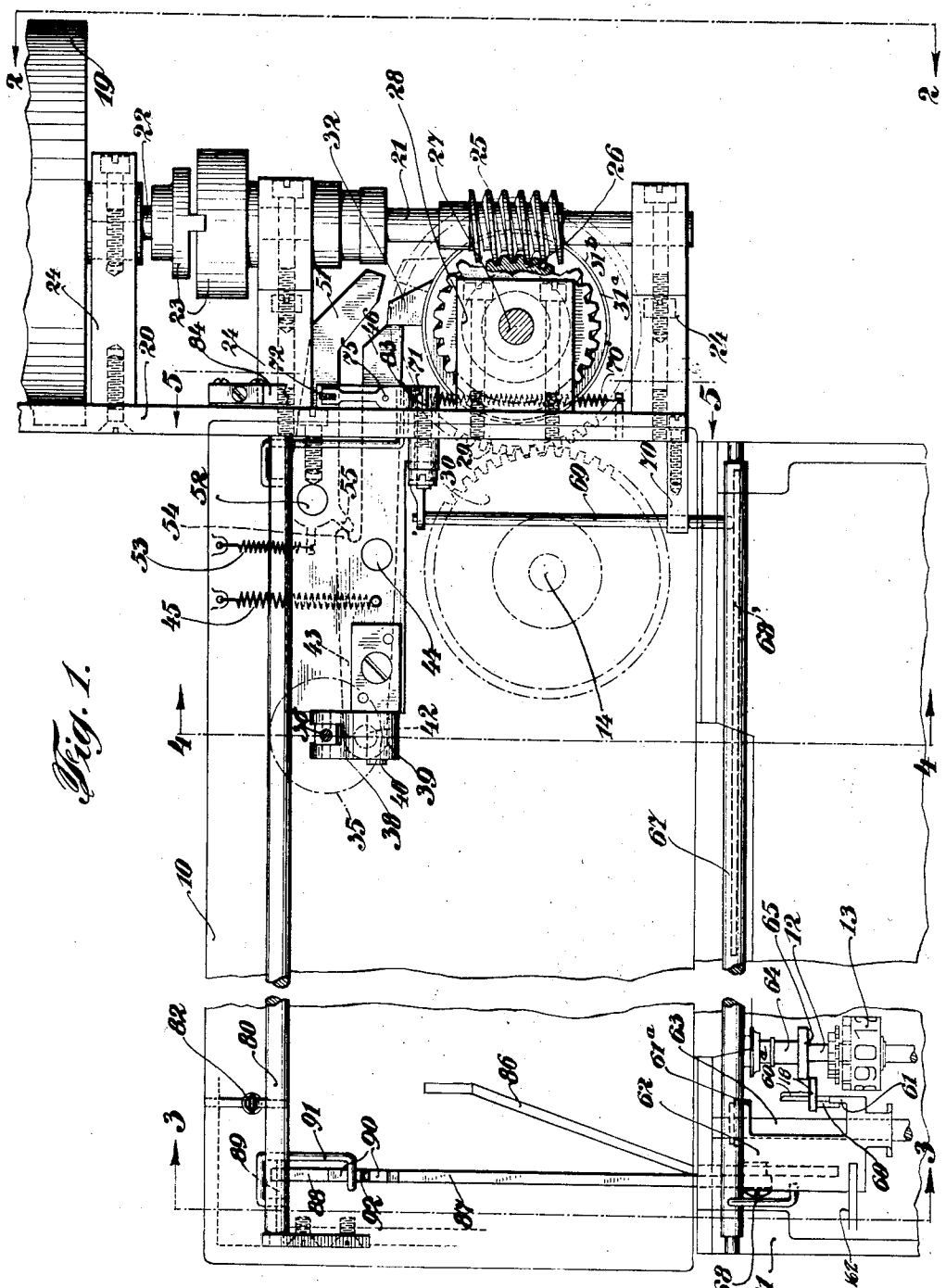

Fig. 1.

INVENTOR
Ralph C. Coxhead
BY
his ATTORNEY

May 22, 1934. R. C. COXHEAD 1,959,779

CALCULATING MACHINE

Filed Sept. 13, 1924 3 Sheets-Sheet 2

Fig. 2.

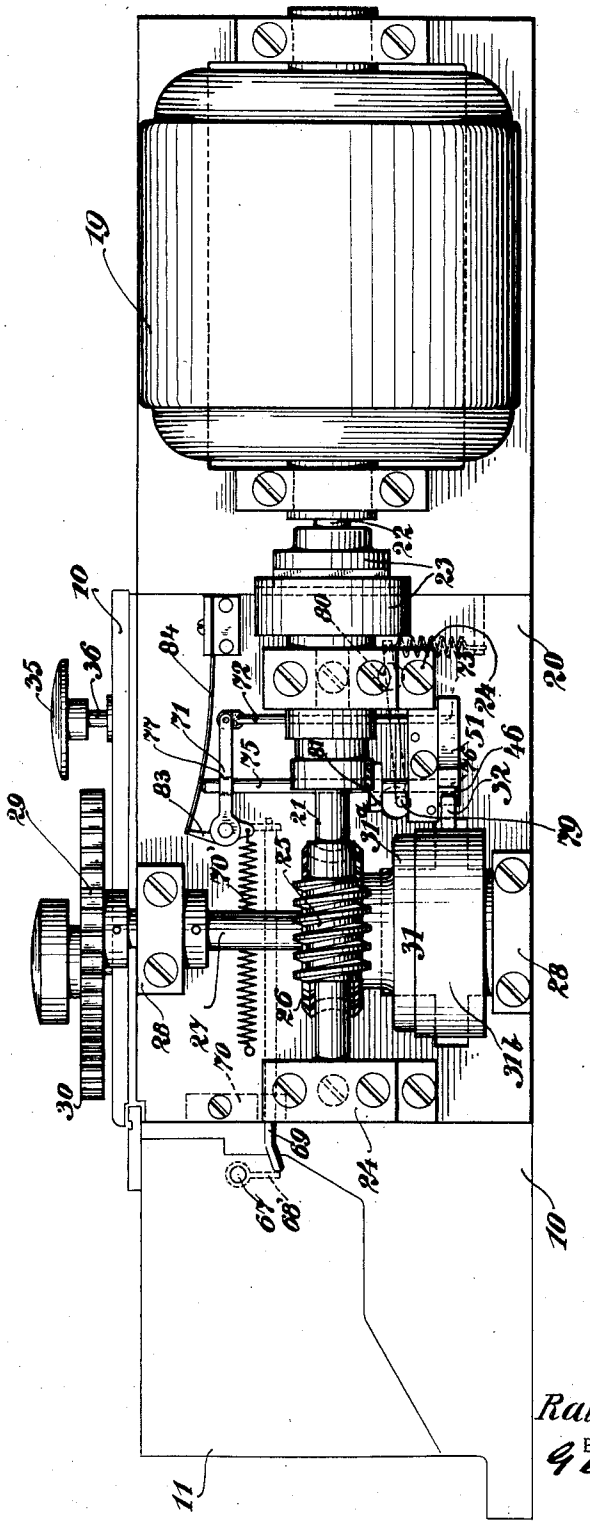

INVENTOR
Ralph C. Coxhead
BY
George C. Sloan
his ATTORNEY

May 22, 1934. R. C. COXHEAD 1,959,779

CALCULATING MACHINE

Filed Sept. 13, 1924 3 Sheets-Sheet 3

Fig. 3.

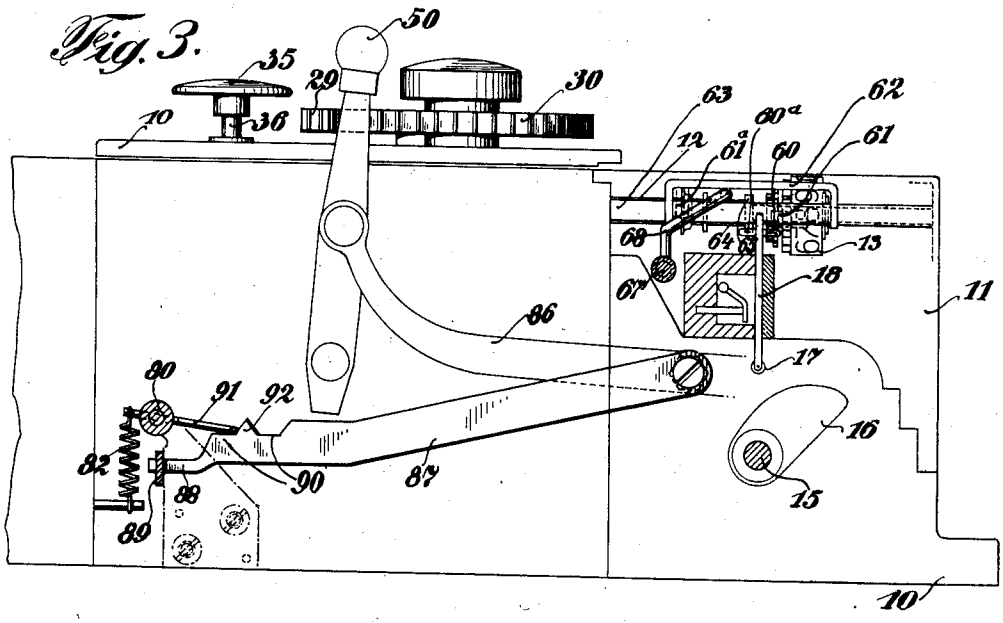

Fig. 4.

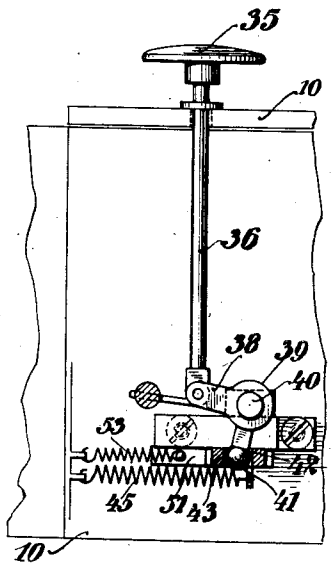

Fig. 5.

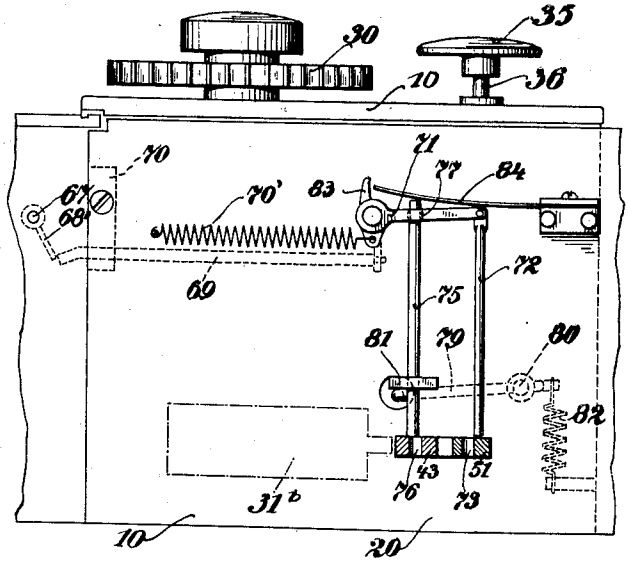

INVENTOR
Ralph C. Coxhead
BY
George C. Dean
his ATTORNEY

Patented May 22, 1934 1,959,779

UNITED STATES PATENT OFFICE

1,959,779

CALCULATING MACHINE

Ralph C. Coxhead, New York, N. Y., assignor to Mercedes Buromaschinen Werke, A. G., Zella Mehlis, Germany, a corporation of Germany

Application September 13, 1924, Serial No. 737,496

47 Claims. (Cl. 235—62)

This invention relates to improvements in calculating machines and involves means for rendering hand-operated machines of the universal calculating type, semi-automatic in operation without necessitating any material change in their design. The invention is applicable to a number of different well known makes of machines, but for purposes of illustration, I have shown it attached to a machine of the character disclosed in the United States patent to Hamann, #1,011,617, of December 12, 1911.

The Hamann patent discloses a hand-operated machine for performing addition, subtraction, multiplication and division. It includes a selector mechanism for setting up a sum to be added or subtracted, or to be used as a factor, multiplicand, or divisor. Means are provided for transferring such sums to a set of registering or accumulating wheels mounted on a travelling carriage, the registering wheels having suitable carry-one mechanism associated therewith. The sum transferred from the selector mechanism to the registering wheels can be transferred in either positive or negative terms, that is to say, it can be either subtracted from or added to the register or any amount already on the register.

The means for predetermining whether the sum is added or subtracted involves a shift lever operable to predetermine whether the sum set up on the selector shall be transferred to the register in terms of the selected digits or in terms of the complements of such digits. The Hamann machine rotates the registering wheels always in one direction, and hence, in performing, subtraction, adds the complement of the actual subtrahend to the amount, if any, on the registering wheels, but my invention may be applied with equal facility to a machine in which the registering wheels are reversely rotated to perform subtraction.

In performing straight addition on the Hamann machine, a sum is set up on the selector mechanism and an operating crank rotated one revolution or stroke to transfer said sum to the register. In performing subtraction, the control lever is shifted to effect the entry on the register of the complement of the subtrahend amount set up on the selector mechanism, and the operation carried out in a similar manner. In multiplying, a factor is set up on the selector mechanism and the crank handle is turned a number of revolutions corresponding to the first figure of the multiplier after which the carriage is shifted one step denominationally and the crank handle turned a number of revolutions corresponding to the second figure of the multiplier, this operation being repeated for each figure of the multiplier. The result appears on the register. Any means for registering the turns in the respective denominational places to indicate the multiplier, may be employed.

In performing division, the dividend is set up on the register and the divisor entered in the selector mechanism. A feature of particular importance in performing division is the means controlled by the carry-one mechanism of the register for automatically locking the drive shaft when, in adding or multiplying operations, the capacity of the register is exceeded, and in subtracting operations, the amount subtracted by complementary addition exceeds the amount registered on the totalizer wheels.

Division, according to one method, as practiced on this machine, consists of a succession of complementary and direct adding operations, during which the machine will be locked whenever, in complementary subtraction, the amount thus subtracted does not exceed the capacity of the register, and also when directly adding the amount so added does exceed the capacity of the register. In other words, when performing an operation in division, the traveling carriage is so adjusted relatively to the keyboard as to position the first figures of the dividend entered on the right-hand wheels of the register mounted in the traveling carriage, in approximate alignment with the first figures of the divisor set up on the selector mechanism. Having set the shift lever to its "Subtract—Divide" position, the main crank is turned to repeatedly subtract (by complementary addition) the divisor set up on the selector mechanism from the dividend on the register, until "nines" appear on all the register wheels to the left of that on which the digit of highest denomination in the dividend was registered. The occurrence of such condition (the appearance of "nines") indicates that the divisor has been subtracted once too often from the dividend. At the completion of such excess subtracting operation, means controlled by the register operates automatically to lock the main drive shaft and its crank against rotation. When the operator is notified, by his inability to further rotate the main crank, that the machine is locked, from which condition he knows that the divisor has been subtracted once too often, he adjusts the shift or state-controlling lever to its "Add—Multiply" position.

The shift or state-controlling lever, when adjusted from either of its positions to the other,

operates to unlock the drive shaft and enables the register carriage to shift one step to the left automatically. The register carriage, by such one-step shift, increases the partial dividend under treatment in much the same manner as occurs in the mental performance of division. With the state-controlling lever in its "Add—Multiply" position, the operator turns the released main crank, to repeatedly add the divisor to the increased partial dividend until ciphers appear on the totalizer wheel to the left of the digit of highest denomination remaining on the totalizer.

The presence of zeros at this stage of the operation indicates that the capacity of the totalizer has been exceeded by the addition of the divisor once too often to the dividend, and such condition enables the totalizer to again effect an automatic locking of the machine against further operation.

Thereupon, the operator manually shifts the state-control lever from its "Add—Multiply" to its "Subtract—Divide" position, whereby to again condition the machine for complementary subtraction, release the automatic lock, and enable the totalizer carriage to shift another step to the left to again increase the partial dividend under treatment.

The foregoing conditions having been effected, the operator again repeatedly operates the machine, as in the first stage, until the excess subtraction of the divisor from the dividend again results in an overdraft registration and the appearance of "nines" on those totalizer wheels to the left of the wheel bearing the digit of highest denomination of the remainder of the dividend. Such operations are alternately carried out until the sum is divided out as far as possible with a remainder, if any, on the register. A suitable quotient-indicating mechanism controlled from the crank shaft and mounted on the carriage, indicates the quotient in terms of crank shaft revolutions. This indicator is equipped with a reversible carry-one mechanism for eliminating the indication of the extra revolution of the shaft upon the first revolution in a reverse direction after having subtracted or added the divisor once in excess of the number of times it is receivable into the partial dividend under treatment.

In accordance with the illustrated embodiment of my invention, which involves rendering a machine of the above described general character semi-automatic in operation, I utilize a motor instead of a crank for turning the main operating shaft, but I may retain the manual shift lever for predetermining the addition or subtraction of the sum selected to or from the sum on the register. The carriage may be denominationally fed either manually or automatically. The methods of performing addition and subtraction remain the same except that instead of turning the crank shaft, a suitable clutch-controlling member may be manually operated to connect the motor with the drive shaft for a single revolution. Preferably, this clutch-controlling member is in the nature of a depressible, spring-opposed push button or bar operable upon a main clutch-controlling lever normally holding the clutch out and adapted to free the clutch for engaging with the main operating shaft when the button or bar is depressed. In performing multiplication, the clutch-controlling push button is held down manually until the motor has turned the drive shaft the desired number of revolutions, for each digit of the multiplier, after which the clutch-controlling push button is released by the operator to enable the main clutch controlling lever to restore to effective position.

In performing division, however, it is obviously difficult to estimate the exact number of revolutions required of the operating shaft and the use of the motor consequently involves the use of a supplemental clutch-controlling member for automatically throwing out the clutch at the proper times, even though the button is still held depressed. Preferably, the operation of this supplemental clutch controlling means is governed by the standard carry-one mechanism for the registering wheels and is operable to automatically disconnect the clutch on the revolution during which the register has in effect subtracted back through zero or added forward through "999," etc.

A preferred embodiment of the invention includes means associated with the main or push button control for holding the supplemental clutch-control member inoperative whenever the push button control is not manually held effective. When the push button is depressed, however, the means for causing the supplemental control to disconnect the clutch upon that revolution of the operating shaft which causes overrunning of the register, becomes operable. Thus, in performing division, the push button control is depressed and held down until the motor is disconnected by the supplemental clutch control. Upon such stopping of the machine, the push button may be manually released whereupon it automatically restores to effective position in the path of the clutch arm 32 to hold the clutch members disengaged, and in so doing, will automatically restore the supplemental clutch control member to inoperative position where it will be held until, upon a reversal of the shift lever and another depression of the push button in continuing the operation of division, the capacity of the register is again exceeded in repeated additions of the actual divisor thereto, or not exceeded in repeated additions of the complement of such divisor. The push button control thus serves as a re-set mechanism for the supplemental control member.

My invention may also include the use of an automatic locking device of particular importance in performing division, such locking device being operable to hold the main clutch control lever effective until the shift lever has been adjusted. Thus, when the machine has been set for either an adding or a subtracting operation, and in the performance of its work, the machine becomes idle due to the action of the automatic clutch control, under the above-explained conditions, it is not possible to start the machine again without first reversing the shift lever. This feature constitutes an effective safe-guard for preventing incorrect actuation of the machine by inexperienced operators.

As above suggested, the application of the motor to the type of hand machine disclosed in the prior patent will involve no substantial change in construction, and the conversion of the hand-operated machines into semi-automatic machines may be performed by an ordinary mechanic in a very short time. As a matter of fact, the driving motor and its associated parts may be manufactured and sold as an attachment for the older type of machine.

It is to be borne in mind that, while I have shown my invention as applied to one well known type of machine, the principles involved may be readily adapted for application to practically any make of universal calculating machine, without

necessitating material changes either in the basic design of the machine or the construction of my novel mechanism.

The details of the motor attachment and its associated mechanism may be better understood from the accompanying drawings in which various details of the old standard type of machine have been omitted for the sake of clearness, only such conventional mechanism being shown as is necessary to a clear understanding of the construction and operation of the clutch control selected to illustrate one embodiment of the invention.

In the accompanying drawings

Figure 1 is a broken plan view of a calculating machine embodying the invention,

Figure 2 is a right end view on the line 2—2 of Fig. 1,

Figure 3 is a transverse section on the line 3—3 of Figure 1 looking toward the right,

Figure 4 is a transverse section on the line 4—4 of Figure 1,

Figure 5 is a transverse section on the line 5—5 of Figure 1 looking toward the left.

Inasmuch as the selector mechanism or keyboard, the carriage feed, the means for transferring sums from the selector mechanism to the register, the quotient-indicating mechanism, register clearing mechanism and numerous other details of the machine shown in U. S. patent to Hamann, 1,011,617, issued December 12, 1911, form no part of the present invention, they have been entirely omitted from the drawings. I have shown only such standard parts of the Hamann machine as are necessary to an understanding of my improved mechanism and the standard parts have been indicated in light lines.

The frame work of the machine may conveniently include a rectangular housing 10 accommodating any suitable type of selector mechanism (not shown). Shiftable longitudinally in front of the housing 10 is a travelling carriage 11 (Figs. 1 and 3) in which there are mounted transverse shafts 12 carrying registering wheels 13. In Figure 1, I have shown only the shaft of the highest or left hand digit wheel since it is preferably from this shaft that the automatic clutch-controlling devices are operated, although any predetermined wheel of the register may be utilized for the purpose. The conventional main driving shaft 14 is journaled vertically in the walls of the housing 10 near the right hand end of the machine, this shaft serving to drive the transfer wheels, (not shown) which couple the selector mechanism with the register at the proper times, and serving also to operate various other devices, such as the cam shaft 15 (Fig. 3). This shaft is journaled in the forward end of the machine frame below the carriage and carries cams 16 which engage with the rollers 17 at the lower ends of vertically sliding carrying members 18 which form part of the carry-one mechanism for the registering wheels 13 on the carriage. The means by which the vertical slides 18 effect transfer from one wheel to another is not material to the present invention and the way in which the slide of the last digit wheel effects control of the driving motor will be more fully explained hereinafter.

In applying a motor drive to a machine of this character, the motor 19 (Figs. 1 and 2) may be mounted in any convenient position. I find that I am able to obviate the necessity for making any material changes in the standard construction of the machine by mounting the motor on a frame plate 20 secured under the machine or to the end of the housing 10 which is adjacent the drive shaft 14. Numerous expedients might be resorted to for properly gearing the motor to the shaft 14, and for purposes of illustration, I have merely shown one convenient power transmitting mechanism, which includes a worm shaft 21 axially aligned with the shaft 22 of the motor and directly coupled thereto by a clutch 23. Shafts 21 and 22 are mounted in suitable bearings 24 projecting laterally from the frame plate 20. A worm 25 on the worm shaft 21 meshes with a worm wheel 26 on a vertical countershaft 27, the bearings 28 of which are carried by the frame plate 20. The upper end of the countershaft carries a gear 29 fast thereto meshing with a similar gear 30 fast on the main shaft 14 of the machine.

Worm wheel 26 is loose on the shaft 27 and is adapted to be readily coupled thereto and uncoupled therefrom through the intermediacy of a clutch 31 (Fig. 2). This clutch may be of any suitable design and may be mechanically or magnetically operated. Preferably, however, a friction clutch is used, the radially projecting arm 32 of which controls engagement of the friction members in a conventional manner. This arm is preferably normally spring-pressed into clutch-engaging position and may be kicked out or swung against the action of its spring to disconnect the two rotatable members 31*a*, 31*b* of the clutch, to permit idle rotation of member 31*a* and disconnection of the driving shaft 27 and the motor. I have not illustrated the details of construction of the clutch inasmuch as they are entirely conventional.

The main clutch-controlling member preferably comprises a depressible push button 35 (Fig. 4) carried on a vertically movable rod 36 mounted in and passing upwardly through the top of the casing 10, the rod being normally held in its upper or outer position by a coiled spring 45. Depression of the rod 36 against the action of its spring rocks a crank lever 38 having a hub 39 journaled on a stud shaft 40, said crank lever including a knobbed extension 41 engageable in an opening 42 in one end of a clutch-controlling lever 43. Lever 43 is pivoted intermediate its ends on a stud 44 (Fig. 1) and is normally retained by the spring 45 in the position shown in Figure 1 of the drawings, where its free end 46 is disposed in the path of the clutch arm 32, to hold out or maintain disconnected the two members of the clutch 31. When the push button 35 is depressed, it operates through the medium of the crank lever 38 to swing the clutch-controlling lever 43 on its pivot and move the free end 46 of the lever out of the path of the clutch arm 32, thereby permitting the spring-urged clutch members 31*a*, 31*b* to couple the motor with the shaft 14 and drive the machine.

In performing addition or subtraction, a sum set up on the selector mechanism may be transferred to the registering wheels by simply depressing the push button 35 to cause the clutch-controlling lever 43 to release the clutch arm 32, whereupon the clutch members 31*a*, 31*b* automatically connect the motor with the main drive shaft 14 to turn the latter.

The action of the clutch members is so rapid that the push button may be almost immediately released, when adding a series of items, whereupon the spring 45 restores the push button and returns the free end 46 of the clutch-controlling lever into the path of the clutch arm 32, so that as the latter completes one rotation it strikes and is arrested by the end 46 of the lever 43, which

effects disconnection of the clutch members in a well-known manner. In performing multiplication, a multiplicand is set up on the selector mechanism. The push button is then held down until the machine has made a number of revolutions corresponding to the highest figure of the multiplier, after which the carriage is shifted denominationally and the operation repeated for the remaining numerals of the multiplier. The presence of indicating mechanism, which is not illustrated but which forms a conventional part of machines of this character and indicates crank shaft revolutions, makes it a comparatively simple matter to multiply correctly by simply holding down the button and watching the indicator until the correct number has been reached. Similar results may be had by starting to multiply by the lowest figure of the multiplier and shifting the carriage denominationally in the opposite direction for the higher figures.

In performing division, a very different problem is presented since division is performed on the machine by a series of adding and subtracting operations. The divisor set up on the selector mechanism is first subtracted by complementary addition from the dividend set up on the register once too many times, or in other words, subtracted until the register is over-run through "999" etc., after which the machine must be set for addition, the carriage shifted, and a number of adding operations performed until the divisor has been added to the partial dividend the proper number of times to exceed the capacity of the register. After the register has been over-run either by adding thereto the exact amount set up in the selector mechanism, or by adding the complements of such amount, the shift lever 50 which predetermines whether sums on the selector are transferred to the register in terms of equivalents or complements, must be operated. It is impracticable to watch the register to predetermine which revolution of the shaft 14 will result in over-running the register or carrying beyond its limits, and consequently I find it necessary to employ a supplemental automatic clutch-controlling means which will positively disconnect the motor from the shaft 14 at such times.

The supplemental clutch control member is preferably locked against actuation by means under control of the carry-one mechanism of the highest or last left hand registering wheel 13, to retain the supplemental clutch control member idle unless and until the capacity of the register is exceeded. This supplemental clutch control member includes a lever 51 (Fig. 1) pivoted adjacent one end on a stud 52, fixed to the machine frame and including a free end movable into the path of the clutch arm 32, when the supplemental clutch-control lever is released for operation by the carry-one mechanism and swung clockwise on its pivot. A spring 53 normally tends to urge the lever into position to effect the disengagement of the clutch members, but when the clutch-controlling lever 43 is in its effective position shown in Figure 1, the lever 51 is held inoperative by the engagement of the projection 54 on the clutch-controlling lever 43 with a similar extension 55 on the lever 51 to rock the lever 51 counter-clockwise about its pivot and hold it in the position shown in Figure 1. To accomplish this result, it is, of course, necessary that the spring 45 be considerably stronger than the spring 53 since these springs act against each other while the clutch-controlling lever 43 is effective to hold the clutch members disengaged, as illustrated.

For convenience of description, I have referred to the supplemental clutch lever 51 as being controlled by the carry-one mechanism of the highest or last registering wheel to the left. Such mechanism, while generally similar to the carry-one mechanism of all of the other registering wheels, is perhaps not properly termed carry-one mechanism since there is no higher digit wheel to which it may transfer. We may, however, term it carry-one mechanism inasmuch as it is operated from the same cam shaft 15 by the cam 16 and slide 18 and also inasmuch as the carry-one mechanism of any other selected registering wheel might serve the same purpose.

The slide 18, at its upper end, carries a pair of horizontally disposed relatively offset arms 60, 60*a* (Figs. 1 and 3) adapted, respectively, for engagement with relatively offset fingers 61, 61*a* projecting from opposite ends of a trip plate 62 pivotally and slidably mounted on a shaft 63, journaled in the carriage adjacent and parallel with the last counter wheel shaft 12. The trip plate is shifted back and forth on the shaft 63 whenever the position of the shift lever 50 is changed, by means such as is disclosed, for instance, in the Hamann Patent 1,011,617, above referred to. A sleeve 64 sliding on the shaft 12 carries at one end an annular flange 65 cooperable with the slide 18 on the left to tilt the same laterally toward the trip plate 62 as the slide is lifted by the cam 16. Means (not shown, but fully disclosed in the patent to Hamann, above mentioned) are provided for sliding the sleeve 64 forwardly on the register wheel shaft 12 whenever the registering wheel 13 passes from "nine" to zero. Consequently at such time, the flange 65 will be in position to tilt the slide 18 as the latter is raised by its cam 16, and swing the arm 60 to a position where it will clear the finger 61 when the machine is set for subtraction. The position of the trip plate 62 illustrated in Fig. 1, is the position it assumes when subtraction is being performed on the machine. Consequently, as long as the last registering wheel makes a complete rotation at each revolution of the driving shaft 14, the sleeve 64 will slide forward at each operation to position its flange 65 in the path of the carrying member 18 of highest order to crowd the latter with its arm 60 to the left, so that during its upward travel, the arm will not contact the finger 61. As soon, however, as the complement of a negative amount appears on the register, or in other words, when the wheel 13 of highest denomination fails to make a complete revolution, the sleeve 64 will not move forwardly, and the arm 60 will engage the finger 61 and trip the plate 62. When the trip plate is in its opposite extreme position, as in adding the exact amounts set up on the selector mechanism, the finger 61*a* will coact with the arm 60*a*, and a reverse condition is set up in which the arm 60*a* is arranged to clear the finger 61*a* in normal adding operations, but will swing over and lift the finger and its trip plate 62 whenever the flange 65 is in its forward position. In other words, as long as the last registering wheel remains below "nine", the plate 62 will not be tripped, but as soon as the capacity of the wheel of highest denomination is exceeded from "nine" to zero, the finger 60*a* will become operative and trip the plate. This operation of the carry-one mechanism to trip the plate 62 is entirely conventional, and is clearly explained in the Hamann patent referred to.

Novel mechanism is utilized to establish an operative connection between the trip plate 62 and the supplemental clutch controlling lever 51. A shaft 67 is journaled in the ends of the carriage 11 and carries a finger 68, the free end of which is disposed under the trip plate (Figs. 1 and 3) and adapted to be depressed whenever the trip plate is rocked by one of the arms 60, 60a. Rocking movement of the finger 68 will tend to partially rotate shaft 67 to swing a blade 68' (Figs. 1, 2 and 5) sweated to and extending radially from the shaft 67, into engagement with the free end of a thrust bar 69 which is guided in a bracket 70 secured to the main frame of the machine. The opposite end of the thrust bar 69 is articulated with one arm of a suitably pivoted bell crank lever 71 to rock the latter counter-clockwise (Fig. 5). A pin 72 pivoted at one end to another arm of the bell crank lever 71 has its free end normally disposed within an opening 73 in the supplemental clutch control lever 51 to normally retain this lever in the idle position shown in Figure 1. Rocking the bell crank under the influence of the thrust rod 69 against the influence of a tension spring 70' retracts the pin from the opening in the supplemental clutch-controlling lever 51.

It is to be remembered the trip plate 62 can only become operative while the machine is running. Depression of the control button 35 operates to swing the clutch-control lever 43 out of the position shown in Fig. 1, to a position where the projection 54 of the lever 43 cannot act on the extension 55 of the supplemental lever 51. As a result, the supplemental clutch control lever 51 is free to swing into the path of the clutch-arm 52 under the influence of its spring 53, whenever the pin 72 is withdrawn by the carry-one mechanism as the capacity of the register is exceeded. Thus, in the operation of division, when the machine is set for either addition or subtraction and the push button control 35 is held down, the trip plate 62 will become active when the capacity of the wheel 13 of highest denomination in adding operations is exceeded, or upon failure to exceed such capacity when subtracting by complementary addition to release the supplemental control lever 51 for operation, to disconnect the motor from the drive shaft. The shaft or rod 67 serves as a very convenient means for transferring motion from the trip plate 62 at one end of the machine to the clutch control lever 51 at the other end of the machine. The rod is preferably given a rotary movement, as described, but may either be pivoted, slid or otherwise moved in accordance with the problems presented in various types of machines and the arrangement of other operating parts on the carriage. As a matter of fact, the rod 67 is not necessarily mounted on the carriage but could be mounted on the frame of the main casing 10, in which case, the finger 68 would be arranged to slide along the rod as the carriage was shifted.

Disconnection of the clutch 31 warns the operator that the registering capacity has been exceeded, in adding operations, or that it has not been exceeded in subtracting operations, and if he is performing division, it indicates that the lever 50 should be shifted before proceeding. The carriage shifting mechanism (not shown herein but fully disclosed in the Hamann patent heretofore referred to) is preferably controlled directly from the lever 50 so that the only operation necessary, if the machine is stopped while performing division, is to shift the lever 50.

I find it desirable and of particular advantage when the machine is being operated by an unskilled operator, to provide means which will make it impossible to start the machine after the motor has been disconnected from the machine by the supplemental clutch control, unless the lever 50 is first shifted. I accomplish this by the use of another locking pin 75 (Figs. 2 and 5) which may be set into a hole 76 in the lever 43 to retain this lever in clutch disengaging position until the lever 50 has been shifted. The locking pin 75 may be guided at its upper end in an opening 77 in the bell crank 71 and is normally held in the elevated position shown in Figure 5 by a finger 79 carried by a transversely extending rock shaft 80 journaled in the main frame of the machine. Finger 79 engages a collar 81 on the pin to lift the same, a spring 82 acting on the finger and rock shaft 80 to retain them normally in the positions shown in Figure 5. The bell crank 71 is provided with a keeper in the nature of a prong 83 which normally supports the free end of a flat spring 84 (Fig. 2). When the bell crank is rotated by the thrust rod 79, the keeper moves out from under the end of this spring and permits it to snap downwardly, depressing the pin 75, against the tension of the inferior spring 82. At the time that the thrust rod is actuated, the clutch-control lever 43 will be held ineffective by the push button 35 and consequently, as the spring 84 moves downwardly, it will press the pin against the upper surface of this lever closely adjacent the hole 76 therein, as indicated in Figure 5. As soon, however, as the push button is released to permit the clutch-control lever 43 to move into effective or clutch disengaging position and to disable the supplemental clutch-control lever 51, the pin 75 will drop into the opening 76 of the lever 43 after the latter has shifted to effective position relatively to the clutch, the end of spring 84 being lowered sufficiently to enable it to block the return of the bell crank 71 and of the locking pin 72 to their normal positions.

It will be understood that the main clutch control lever 43 must have been held in its idle position by pressure on the push button 35 so as to remove the projection 54 of the main control lever 43 from the path of the opposed projection 55 on the supplemental control lever 51, in order to enable the automatic operation of the supplemental clutch control lever 51 to its effective position upon the release of the locking pin 72.

Therefore, the main control lever 43, upon its return to effective position, due to release of the push button 35, and as an incident thereto, operates under the influence of its spring 45 and through its projection 54 and the projection 55 on the supplemental control lever 51, to automatically shift the supplemental control lever back to its idle position.

The supplemental control lever 51 is arranged to disable the clutch at a point in the cycle of travel of the clutch sufficiently in advance of the point at which the main control lever 43 disables the clutch, so that the latter lever can assume effective position in time to again arrest the clutch arm after its release by the supplemental clutch control lever upon the automatic restoration of the supplemental lever to idle position, at the completion of such cycle of travel.

The supplemental lever 51 on its return to its idle position, re-locates the hole or aperture 73 in line with the locking pin 72.

It is now impossible to start the machine by depressing the push button 35, since the pin 75 holds the lever 43 against movement, and in order that operation of the machine may be resumed, it is necessary to shift the lever 50, which, through the medium of a link 86 (Fig. 3) pivotally connected thereto, actuates a release mechanism for the pin 75. This release mechanism preferably comprises a bar 87 pivoted to the link 86 and having a reduced end 88 sliding in a guide way 89 as the lever 50 is shifted. The upper surface of the bar 87 includes a flat portion 90 against which a finger 91 on the rock shaft 80 bears as the spring 84 becomes active to depress pin 75 and rotate the rock shaft through the collar 81 and the arm 79. As the lever 50 is shifted, a cam 92 which interrupts the intermediate portion of the flat surface 90, is forced against the finger 91 to elevate the finger and turn the shaft 80 to positively lift the pin 75 out of engagement with the clutch-control lever 43 against the action of the spring 84. As this pin is lifted through the medium of the finger 79, and the collar 81, it forces the leaf spring 84 upwardly so that its free end clears the upper end of the prong 83, whereupon the bell crank 71 snaps back to normal position by the action of its spring 70' and introduces its prong beneath the free end of the spring 84 to prevent the latter from acting upon the pin 75. The spring 82 is thus permitted to retain the pin 75 in elevated position. As the bell crank 71 snaps back to normal position, it causes the locking pin 72 to re-enter the hole or aperture 73 in the supplemental clutch-controlling lever 51 to maintain the latter idle under control of the carry-one mechanism of highest order, and the push button 35 and main clutch control lever 43, until the capacity of the machine is again exceeded while the main control lever is in idle position. It will be noted that ordinary stoppage of the machine by release of the push button 35 is ineffective to lock lever 43 by the pin 75 since the keeper 83 always holds the spring 84 inactive until such time as the supplemental clutch lever 51 is freed from its own locking pin 72, and operates to disengage the clutch. In other words, the presence of the pin 75 and its associated mechanism can never by any chance interfere with the ordinary stopping and starting of the machine, which occurs when performing addition, subtraction, and multiplication, unless, in performing such operations, the register is carried beyond its limit. If it were not for the use of the locking pin 75, it would be possible to reset the automatic clutch-control lever 51 by releasing the push button 35, and continue the operation of the machine improperly. By virtue of my improved attachment, the machine is rendered practically fool proof by the automatic locking of the clutch control levers 43 and 51 until the position of the shift lever 50 has been reversed.

I have illustrated and described merely one preferred embodiment of the invention. It will be obvious that numerous changes and alterations might be made in the general form and arrangement of the parts described without departing from the invention, and hence I do not wish to limit myself to the details set forth, but shall consider myself at liberty to make all changes and alterations which fairly fall within the spirit and scope of the appended claims. In certain of the claims I use the expression "a form of said . . . item." Hereinabove it has been noted that at times an item is added to the quantity standing on the register and at other times the complement of said item is added instead; in order to define such an insertion into the register I use the term above quoted.

I claim:

1. In a motor driven calculating machine including differential mechanism for mechanically representing an item with means for transmitting a form of said mechanically represented item to a set of registering wheels; the combination with a clutch controlling the transmission of power from the motor to the register, said clutch including a control arm, a lever normally spring held in the path of the clutch arm, to hold the clutch disengaged, and manually operable means for swinging the lever out of the path of the arm to permit engagement of the clutch; of a supplemental lever automatically controlled by the register, upon the occurrence of a predetermined condition therein, and movable into the path of the arm to disengage the clutch whenever the form of said item must be changed.

2. In a motor driven calculating machine, including a register; differential mechanism for mechanically representing an item and means for transmitting a form of said mechanically represented item to the register; the combination with a clutch controlling the transmission of power from the motor to the register, said clutch including a control arm; of a lever normally in the path of the clutch arm, to hold the clutch disengaged, and manually operable means for swinging the lever out of the path of the arm to permit engagement of the clutch, a spring-urged supplemental lever automatically controlled by the register and movable into the path of the arm to disengage the clutch whenever the form of said item must be changed.

3. In a motor driven calculating machine, including selector mechanism; a register controlled thereby; and a clutch for controlling the transmission of power to the machine; of means associated with the register for disabling said clutch when the registering wheels reach a predetermined state said means including a trip plate under control of said register, a rock shaft actuated by said trip plate, a clutch controlling lever normally locked in inactive position means actuated by the rock shaft to release said lever to enable it to move into clutch disabling position, a second controlled clutch lever normally urged to clutch-disengaging position, and means for manually moving said last-named lever out of clutch disengaging position.

4. In a motor driven calculating machine including a register; selector mechanism for mechanically representing an item; means for transmitting a form of said mechanically represented item to the register; the combination with a shaft to operate the transmitting mechanism and, a clutch for connecting and disconnecting said shaft and motor; of means associated with the register for disabling said clutch when the registering wheels reach a predetermined state said means including a trip plate under control of said register, a rock shaft actuated by said trip plate, a clutch-controlling lever normally locked in inactive position means actuated by the rock shaft to release said lever to enable it to move into clutch disabling position, a second clutch-lever normally urged to clutch-disengaging position, manually-operable means for moving said clutch-lever out of clutch disengaging position; and means whereby the last-named clutch-lever, during its return to normal posi-

tion, resets the first-mentioned clutch lever to its inactive position.

5. In a calculating machine, including a register on which values may be added or subtracted; the combination with a drive shaft for operating the machine; co-acting clutch members interposed between the drive shaft and the machine; manually-operable means to control connection and disconnection of the clutch members, under normal operating conditions; and a state-controlling mechanism to predetermine whether the values shall be added or subtracted on the register; of register-controlled means to automatically render the clutch inoperative when the register attains a predetermined condition at a time when the manually operable means is in its ineffective position; and means also under control of the register to lock the manually operable clutch control means in its effective position upon its return thereto until the state-controlling mechanism has been operated.

6. In a machine of the class described, the combination with a register on which numbers may be added or subtracted; a shaft to operate the machine; a clutch interposed between the shaft and the machine; and a state-controlling mechanism to predetermine whether a number shall be added or subtracted; of clutch-releasing means automatically operable to disengage the clutch; a second clutch-releasing means normally operable manually to enable engagement and disengagement of the clutch; and means rendered operable by the automatic clutch-releasing means, to co-act with the second clutch releasing means to prevent operation of the machine until the state-controlling mechanism is re-adjusted.

7. In a machine of the class described, the combination with a register on which numbers may be added or subtracted; a shaft to operate the machine; a clutch interposed between the shaft and the machine; and a state-controlling mechanism to predetermine whether a number shall be added or subtracted; of clutch-releasing means automatically operable to disengage the clutch; and a second clutch-releasing means normally operable manually to enable the clutch to transmit power to the machine, and adapted to be automatically locked in clutch-disengaging position by the operation of the first-named clutch-releasing means.

8. In a calculating machine, the combination with a register on which numbers may be added or subtracted; a drive shaft for operating the machine; a clutch to render the drive shaft effective or ineffective; and a state-controlling means to predetermine whether a number shall be added or subtracted on the register; of manually operable clutch control means to render the clutch effective and ineffective; register-controlled means to automatically render the clutch ineffective; and normally idle means releasable for operation by the automatic clutch control, and operable upon restoration of the manual clutch control means to clutch disengaging position, to lock the manual clutch-control.

9. In a calculating machine, the combination with a register on which numbers may be added or subtracted; a drive shaft for operating the machine; a clutch to render the drive shaft effective or ineffective; and a state-controlling mechanism to predetermine whether a number shall be added or subtracted on the register; of manually operable clutch control means to render the clutch effective and ineffective; register-controlled means to automatically render the clutch ineffective; means under control of the automatic clutch-disengaging means, to lock the manual clutch control in clutch-disengaging position; and means controlled by the state-controlling mechanism to disengage the locking means and the manual clutch control, to free the latter for manual operation.

10. In a calculating machine, including a register on which numbers may be added and subtracted; and a drive shaft to operate the machine; the combination with a clutch to render the drive shaft effective or ineffective; and a state-controlling mechanism to predetermine whether a number shall be added or subtracted on the register; of a manually operable, clutch-control member normally adapted to hold the clutch disengaged; an automatically operable clutch-control member to effect disengagement of the clutch when the register attains a predetermined condition; means controlled by the manually operable clutch-control member upon its return to normal position to reset the automatically operable clutch-control member; locking means released for operation when the register attains said predetermined condition, and effective upon the return of the manually operable clutch-control member to normal position, to lock such member against further operation; and means controlled by the state-controlling mechanism to unlock the manually operable control member.

11. In a calculating machine, the combination with a register on which numbers may be added and subtracted; a drive shaft for the machine; a clutch to render the shaft effective or ineffective; and a state-controlling mechanism to determine whether a number shall be added or subtracted on the register; of a manually operable clutch-release member adapted to normally hold the clutch disengaged; a second, normally idle, clutch-release member automatically operable to effect disengagement of the clutch; means to restore the automatic clutch-release member to its normal position and operable incident to the return of the manually-operable clutch release member to its normal position; and means operable upon the return of the manually operable clutch member to its effective position, to lock the member in such position.

12. In a calculating machine, the combination with a register on which numbers may be added and subtracted; a drive shaft; a clutch to render the drive shaft effective or ineffective, including a control arm; a clutch-releasing member; means to yieldingly retain the clutch-releasing member in, and return it to, its normal position in the path of the control arm, to hold the clutch disengaged; and manually operable means to shift the clutch-release member out of the path of the arm to enable engagement of the clutch; of a normally idle, supplemental clutch-release member and register-controlled means to enable the supplemental clutch-release member to shift into the path of the control arm to disengage the clutch, when the manually-operable clutch-release member is out of the path of the control arm.

13. In a calculating machine, including a register on which numbers may be added and subtracted; the combination with a drive shaft; a clutch to render the drive shaft effective or ineffective; and a manually operable clutch control member; of a second, normally idle, clutch control member; means to shift the normally

idle clutch control member to effective position; releasable means to retain the normally idle clutch control member in its idle position; means to trip the releasable means and free the normally idle clutch control member to the action of its shifting means; and inter-engaging means on the respective control members so arranged that the manually-operable clutch control member, as it shifts in one direction, will move the normally idle clutch control member in the opposite direction.

14. In a calculating machine, the combination with a motor; and a clutch interposed between the motor and the machine to control the transmission of power to the machine; of a clutch control member; means to shift the clutch control member to interrupt the transmission of power to the machine; a manually-operable clutch control member adapted to establish and disestablish the clutch irrespective of the first-named clutch control member; and means whereby the manually operable clutch control member, during its travel to one of its positions, shifts the first-named clutch control member.

15. A calculating machine, including a register on which numbers may be added and subtracted; a state-controlling mechanism for predetermining whether the number shall be added or subtracted; a shaft, including a clutch for driving said machine, means normally operable to hold said clutch disabled, manual means for enabling said clutch, and register-controlled means to automatically disable said clutch while the manually-operable clutch-enabling means is held in its ineffective position.

16. In a calculating machine, the combination with a register on which numbers may be added and subtracted; a drive shaft to operate the machine; a clutch to render the drive shaft effective or ineffective; and a shift state-control mechanism to predetermine whether a number shall be added or subtracted on the register; of a manually-operable clutch control member normally shiftable into and out of effective position relatively to the clutch; and a register-controlled clutch control member normally idle with respect to the clutch, and automatically shiftable under control of the register into effective position relatively to the clutch when the manually-operable clutch control member is out of its effective position.

17. In a calculating machine, the combination with a register on which numbers may be added and subtracted; a drive shaft to operate the machine; a clutch to render the drive shaft effective or ineffective; and a state-control mechanism to predetermine whether a number shall be added or subtracted on the register; of a manually-operable clutch-control member normally shiftable into and out of effective position relatively to the clutch; a normally idle, automatically operable clutch-control member; register-controlled means to render effective the normally idle clutch-control member; and means to enable the manually operable clutch-control member to positively restore the automatically operable clutch-control member to its normal position.

18. In a calculating machine, including selector mechanism, the combination with a register; a drive shaft to operate the machine; and a clutch to render the drive shaft effective or ineffective; of a manually-operable clutch control member shiftable into and out of effective position relatively to the clutch; a supplemental clutch control member actuable relatively to the manually-operable clutch control member when the latter is in one of its positons; means to return the supplemental clutch control member as the manually operable clutch control member moves to its other position; and means released with the supplemental clutch control member, to lock the manual-operable clutch control member when in its last-named position.

19. In a calculating machine, the combination with a register on which numbers may be added and subtracted; a drive shaft to operate the machine; a clutch to render the drive shaft effective or ineffective; and a manually-operable clutch control member shiftable into and out of effective position relatively to the clutch to control the latter; of means to automatically lock the clutch control member in effective position to positively hold the machine inoperative; a manually-operable state-control mechanism, the operation of which is enforced by the automatic locking means; and means controlled by the state-control mechanism to release the locking means.

20. In a calculating machine, the combination with a register on which numbers may be added and substracted; and a drive shaft to operate the machine; of a clutch to render the drive shaft effective or ineffective; a manually-operable clutch control member shiftable into and out of effective position relatively to the clutch; and a supplemental register-controlled clutch control member shiftable to effective position when the manually-operable clutch control member is in its ineffective position.

21. In a calculating machine, the combination with a register on which numbers may be added and subtracted; and a drive shaft to operate the machine; of a clutch to render the drive shaft effective or ineffective; a manually-operable clutch control member shiftable into and out of effective position relatively to the clutch; and normally-idle, register-controlled means, releasable for operation by the manually-operable clutch control member, to automatically shift into effective position relatively to the clutch, when the manually-operable clutch control member is ineffective.

22. In a calculating machine, the combination with a register; and a drive shaft to operate the machine; of a clutch to render the drive shaft effective or ineffective; a manually-operable clutch control member shiftable into and out of effective position relatively to the clutch; automatically operable means shiftable into effective position relatively to the clutch to control the latter, when the manually-operable clutch control member is ineffective; normally effective locking means for the automatic clutch-control means; and register-controlled means to release the locking means to free the automatic clutch control means for operation.

23. In a calculating machine, the combination with a register; and a drive shaft to operate the machine; of a clutch to render the drive shaft effective or ineffective; a manually-operable clutch control member shiftable into and out of effective position relatively to the clutch; automatically operable means shiftable to effective position relatively to the clutch to control the latter, when the manually-operable clutch control member is ineffective; normally effective locking means for the automatic clutch-control means; register-controlled means to release the locking means; and means controlled by the manually-operable clutch control member to restore the

automatic clutch-control means to its normal position.

24. In a calculating machine, the combination with a register; of a drive shaft to operate the machine; a clutch to render the drive shaft effective or ineffective; a manually-operable clutch control member normally shiftable relatively to the clutch; a supplemental clutch control member; locking means to normally maintain the supplemental clutch control member in idle position; normally idle, locking means for the manually-operable clutch lever; and automatically operable means to disable the locking means for the supplemental clutch control member, and enable the locking means for the manually operable clutch control member.

25. In a calculating machine, the combination with a register; a drive shaft to operate the machine; a clutch to render the drive shaft effective or ineffective; a state-control mechanism to predetermine whether an amount set up on the selector mechanism shall be added or subtracted; and a manually-operable clutch control member shiftable relatively to the clutch; of means to enforce a predetermined manual sequence of operations, including a supplemental clutch control member; locking means to normally hold the supplemental clutch control member in idle position; normally idle locking means for the manually-operable clutch control member; means to disable the locking means for the supplemental clutch control member, and enable the locking means for the manually-operable clutch control member; means to thereupon render the supplemental clutch control member effective relatively to the clutch; means controlled by the manually-operable clutch control member on its return to effective position to restore the supplemental clutch control member to idle position, and to enable the lock for the manually-operable clutch control member to become effective; and means controlled by the state-control member to restore the lock for the manually-operable clutch control member, to idle position and free for operation the lock for the supplemental clutch control member.

26. In a calculating machine, including selector mechanism and a register; of a drive shaft to operate the machine; a clutch to render the drive shaft effective or ineffective; a manually-operable clutch control member shiftable relatively to the clutch to control the latter; normally idle supplemental clutch-control means relatively to which the manually operable clutch control member is shiftable; means controlled by the manually operable clutch control member to retain the supplemental clutch control means in idle position; and register-controlled means to render the supplemental clutch control means effective upon the clutch when the manually operable clutch control member is ineffective.

27. In a motor driven calculating machine, the combination with a clutch to control the transmission of power from the motor to the machine, said clutch including a control arm; a lever normally spring-held in the path of the clutch arm to hold the clutch disengaged; and manually-operable means to shift the lever out of the path of the arm to enable engagement of the clutch members; of a supplemental clutch-disengaging lever; a spring to press the supplemental lever into clutch-disengaging position, said spring being relatively weaker than the spring of the manually-operable lever; and means controlled by the manually-operable lever to shift the supplemental lever out of the path of the clutch-control arm as the manually-operable lever is spring-returned to its normal position.

28. In a motor driven calculating machine, the combination with a clutch to control the transmission of power from the motor to the machine; a clutch control member normally effective relatively to the clutch to hold the clutch disengaged; and manually-operable means to shift the lever to its ineffective position to enable engagement of the clutch members; of a normally idle supplemental clutch-control member shiftable into and out of effective position relatively to the clutch; and one-way connections between the manually-operable lever and the supplemental lever to enable the manually-operable lever to automatically restore the supplemental lever to idle position as the manually-operable lever returns to its effective position.

29. In a motor driven calculating machine, the combination with a clutch to control the transmission of power from the motor to the machine; of a pair of clutch-disabling members adapted for alternate operation, one of which members normally locks the other against operation, and disables the clutch; and manually-operable means to shift the normally effective clutch-disabling member to release its locking action on the remaining clutch-disabling member, and to free the clutch for operation.

30. In a motor driven calculating machine, the combination with a clutch to control the transmission of power from the motor to the machine; of a pair of clutch-disabling members, interconnected to adapt them for alternate operation; one of which members normally locks the other against operation, and disables the clutch; manually-operable means to shift the normally effective clutch-disabling member to release its locking action on the remaining clutch-disabling member, and to free the clutch for operation; and means operable to return the normally effective member to its clutch-disabling position, and to re-establish its locking action upon the remaining clutch-disabling member upon the release of the manually-operable means.

31. In a calculating machine, including selector mechanism, the combination with a register; a power drive to operate the machine, including a clutch and a manually-operable clutch-control member shiftable between its limits of travel to render the clutch ineffective or to free it for operation; of an automatically operable clutch control member, likewise shiftable between its limits of travel and relatively to the manually-operable clutch-control member, to render the clutch ineffective or to free it for operation; and register-controlled means to lock the automatically-operable clutch control member in idle position relatively to the clutch.

32. In a calculating machine, including selector mechanism, the combination with a register; a power drive to operate the machine, including a clutch and a manually-operable clutch-control member shiftable between its limits of travel to render the clutch ineffective or to free it for operation; of an automatically operable clutch control member; likewise shiftable between its limits of travel and relatively to the manually-operable clutch-control member, to render the clutch ineffective or to free it for operation; and register-controlled means to lock the automatically-operable clutch control member in idle position relatively to the clutch; and means actuated by the manually-operable clutch control

member and operable upon the automatically-operated clutch control member when the latter is unlocked, to restore it to idle position.

33. In a calculating machine, including selector mechanism, the combination with a register; a power drive to operate the machine, including a clutch and a manually-operable clutch-control member shiftable between its limits of travel to render the clutch ineffective or to free it for operation; of an automatically operable clutch control member; likewise shiftable between its limits of travel and relatively to the manually-operable clutch-control member, to render the clutch ineffective or to free it for operation; and means actuated by the manually-operable clutch control member and operable upon the automatically-operated clutch control member to shift the latter.

34. In a calculating machine, the combination with a register; a drive shaft therefor; a clutch between the drive shaft and the machine; and a manually-operable clutch control member shiftable into and out of effective position relatively to the clutch; of automatically-operable means to disable the clutch when the manually-operable clutch-control member is ineffective; register-controlled means normally adapted to lock the automatically operable means in idle position; a normally idle, locking means to lock the manually-operable, clutch-control member; and means released for operation as an incident to the release of the lock for the automatically-operable clutch-disabling means, to render effective the locking means for the manually-operable clutch control member.

35. In a motor-driven calculating machine, the combination, with a clutch to control the transmission of power from the motor to the machine; of a pair of clutch-disabling members, either of which alone may become effective to disable the clutch; means to enable one of the clutch-disabling members when in effective position to lock the other clutch-disabling means out of operation; and manually-operable means to shift the first-named clutch disabling member to release its control of the other clutch disabling member and to free the clutch for operation; and means to return said manually-operable clutch disabling member to clutch-disabling position and thereby restore the second-named clutch disabling member to, and lock it in idle position.

36. In a motor-driven calculating machine, the combination with a register; register-actuating mechanism; manipulative indexing mechanism to differentially control the register-actuating mechanism; a state-determining mechanism to control the register-actuating mechanism for addition and subtraction; a drive means for the register-actuating mechanism, including a clutch; and a normally effective, manually-operable clutch-control member; of normally idle register-controlled means to render the clutch ineffective when the register attains a predetermined condition at a time when the manually operable clutch control member is in its ineffective position; and means releasable by the state-determining mechanism to lock the manually operable clutch control member in its effective position upon its return thereto after the clutch has been rendered ineffective under control of the register.

37. In a motor-driven calculating machine, the combination with a register on which values may be added and subtracted; register-actuating means; manipulative indexing means to differentially control the register-actuating means; a state-determining means to control the register-actuating means for addition and subtraction; drive means for the register-actuating means, including a clutch; and a manually operable clutch control member shiftable into and out of effective position relatively to the clutch; of automatically operable, register-controlled means to disable the clutch when the register attains a predetermined condition; and means also controlled by the register, to lock the manually operable, clutch-control member in its effective position.

38. In a calculating machine, the combination with a register; register-actuating mechanism; manipulative indexing mechanism to differentially control the register-actuating mechanism; drive means for the register-actuating means, including a clutch; and a state-determining means to control the register-actuating means for addition and subtraction; of a normally effective, manually operable clutch control member shiftable into and out of effective position relatively to the clutch; a normally idle, supplemental clutch control member tripped for operation by the register; and means to enable one of the clutch control members to control the other of said clutch control members.

39. In a calculating machine, the combination with a register; register-actuating mechanism; manipulative indexing mechanism to differentially control the register-actuating mechanism; and drive means for the register-actuating means, including a clutch; of a pair of clutch control members shiftable into and out of effective position relatively to the clutch; and register controlled means to enforce alternate operation of the clutch control members in operations wherein the capacity of the register is exceeded.

40. In a calculating machine, the combination with a register; register-actuating mechanism; manipulative indexing means to differentially control the register-actuating mechanism; drive means for the register-actuating means, including a clutch; and a state control mechanism to determine when an amount shall be added and subtracted on the register; of a plurality of clutch-control members shiftable into and out of effective position relatively to the clutch; and means controlled by the register and by the state-determining mechanism to enforce alternate operation of the clutch control members in operations wherein the capacity of the register is overrun.

41. In a calculating machine, the combination with a register; register-actuating means; manipulative indexing means to differentially control the register-actuating means; and drive means for the register-actuating means, including a clutch; of a plurality of clutch control members shiftable into and out of effective position relatively to the clutch, one of the clutch control members being shiftable to its ineffective position only by another of the clutch control members.

42. In a calculating machine, the combination with a register; register-actuating means; manipulative indexing means to differentially control the register-actuating means; and drive means for the register-actuating means, including a clutch; of a plurality of clutch control members shiftable into and out of effective position relatively to the clutch, one of the clutch control members being shiftable to its ineffective position only by another of the clutch control mem-

bers; and register-controlled means to lock the last-named clutch-control members alternately.

43. In a calculating machine, the combination with a register; register-actuating means; manipulative indexing means to differentially control the register-actuating means; and drive means for the register-actuating means, including a clutch; of main and supplemental clutch control members shiftable into and out of effective position relatively to the clutch; and register-controlled locking means to normally lock the supplemental clutch control member in its ineffective position, and to lock the main clutch control member in its effective position subsequently to the release of the supplemental clutch control member for operation and its return to idle position.

44. In a motor-driven calculating machine, the combination with a register; register-actuating mechanism; manipulative indexing mechanism to differentially control the register-actuating mechanism; and drive means for the register-actuating mechanism, including a clutch; of a manually operable, normally effective clutch control member to interrupt the transmission of power to the register-actuating means; and a normally idle supplemental clutch control member automatically controlled by the register upon the occurrence of a predetermined condition therein, and by the manually operable clutch control member, to shift into effective position relatively to the clutch when the manually operable clutch control member is in idle position.

45. In a motor-driven calculating machine, the combination with a register; register-actuating mechanism; manipulative indexing mechanism to differentially control the register-actuating mechanism; and drive means for the register-actuating mechanism, including a clutch; of a manually operable, normally effective clutch control member to interrupt the transmission of power to the register-actuating means; and a normally idle supplemental clutch control member automatically controlled by the register upon the occurrence of a predetermined condition therein, and by the manually operable clutch control member, to shift into effective position relatively to the clutch when the manually operable clutch control member is in idle position; and means actuated by the manually operable clutch control member incident to its return to effective position, to shift the supplemental clutch control member to its idle position preparatory to being again locked in such idle position.

46. In a motor-driven calculating machine, the combination with a register; a clutch to control the transmission of power from the motor to the register; a lever normally adapted to hold the clutch disengaged; and manually operable means to shift the lever to enable the clutch to function; of a supplemental lever shiftable into the path of the clutch to disengage the clutch; and a locking pin to normally hold the supplemental lever inactive, and, automatically releasable upon the occurrence of a predetermined condition in the register.

47. In a calculating machine, the combination with a register on which numbers may be added and subtracted; a drive shaft to actuate the register; a clutch to render the shaft effective or ineffective; and a state-control mechanism to determine whether a number shall be added or subtracted on the register; of a manually operable clutch-release member adapted to normally hold the clutch disengaged; a second, normally idle, clutch release member automatically operable to effect disengagement of the clutch; and means to restore the automatic clutch-release member to its normal position, and operable incident to the return of the manually operable clutch-release member to its normal position.

RALPH C. COXHEAD.