3 Sheets—Sheet 1.

J. F. HOLLISTER.

GRAIN-BINDERS.

No. 193,817. Patented Aug. 7, 1877.

Fig. 1

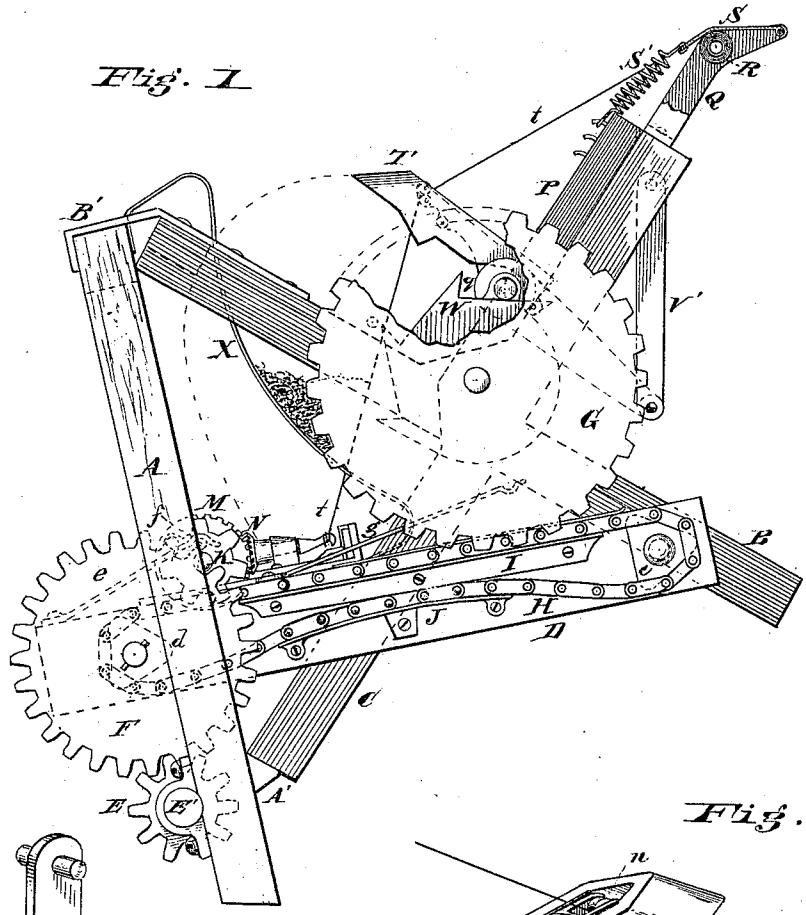

Fig. 3

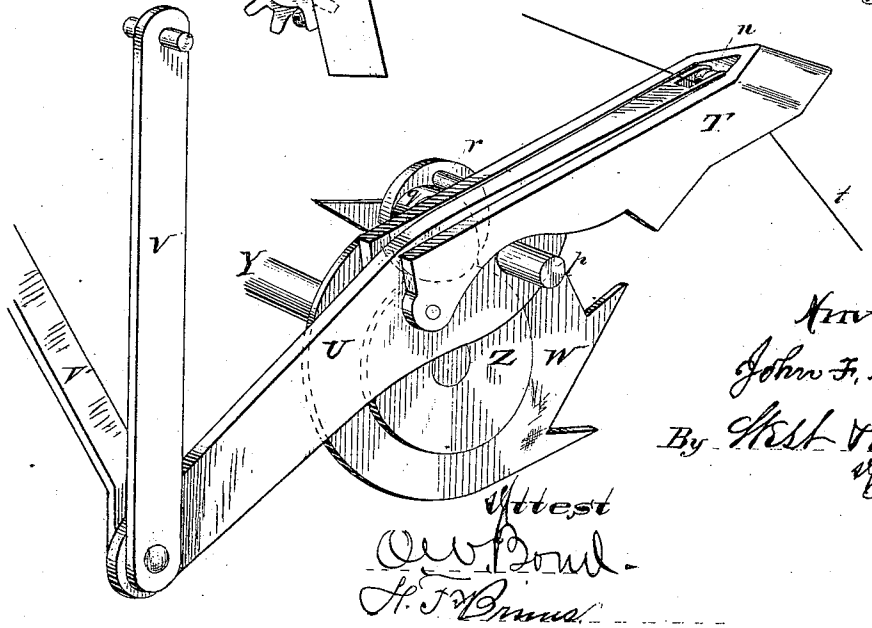

Inventor
John F. Hollister
By West & Bond
Attorneys.

Attest
O. W. Bond
H. F. Burns

N. PETERS, PHOTO-LITHOGRAPHER WASHINGTON, D. C.

3 Sheets—Sheet 2.

J. F. HOLLISTER.

GRAIN-BINDERS.

No. 193,817. Patented Aug. 7, 1877.

Fig. 2

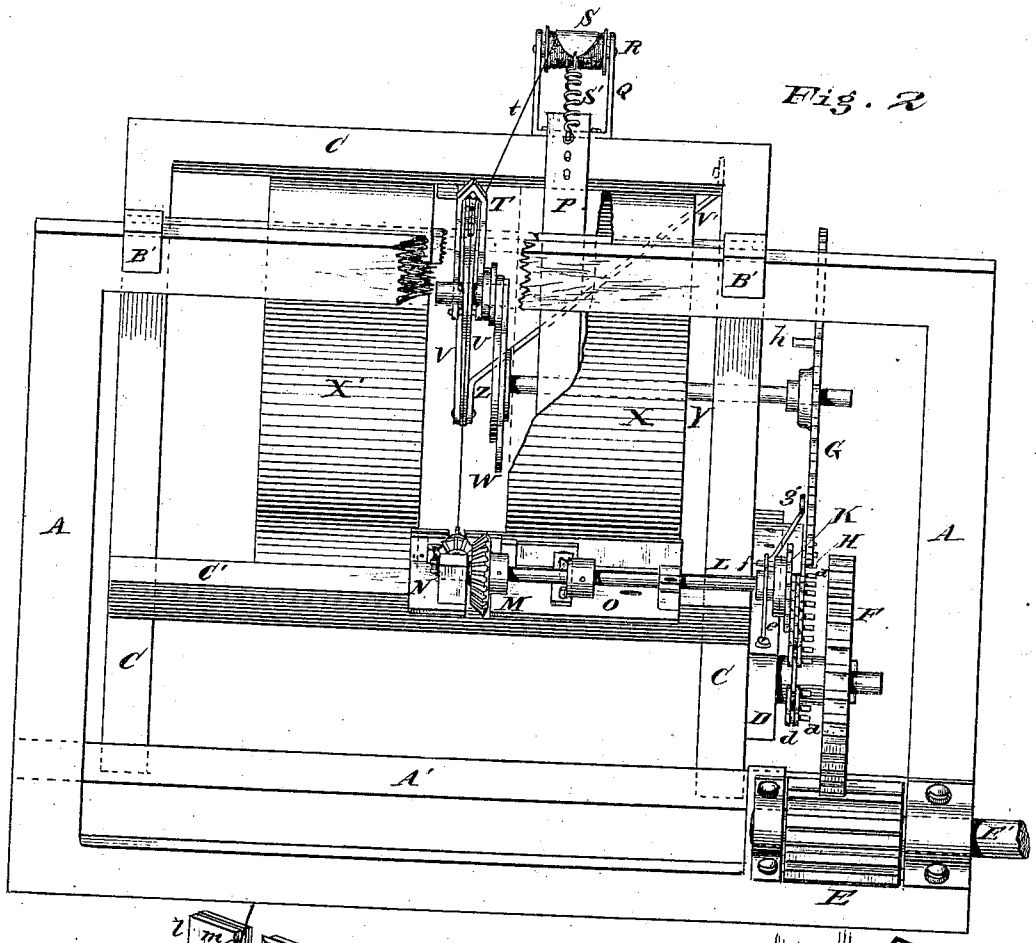

Fig. 4

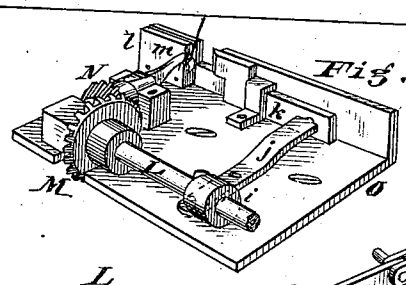

Fig. 3

Witnesses:
C. W. Bond.
A. F. Burns.

Inventor:
John F. Hollister
By West & Bond.
Attorneys.

N. PETERS, PHOTO-LITHOGRAPHER, WASHINGTON, D. C.

3 Sheets—Sheet 3.

J. F. HOLLISTER.

GRAIN-BINDERS.

No. 193,817. Patented Aug. 7, 1877.

Fig. 6

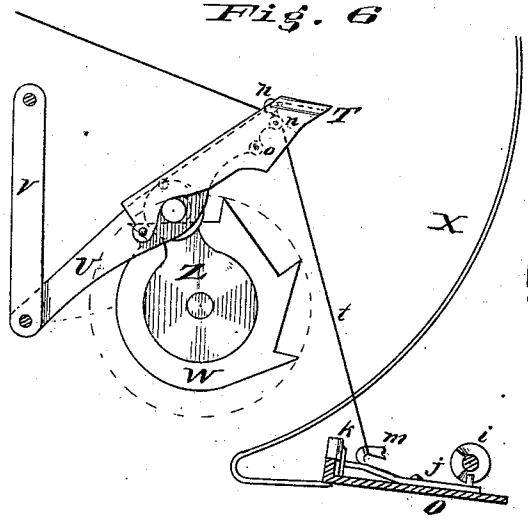

Fig. 7

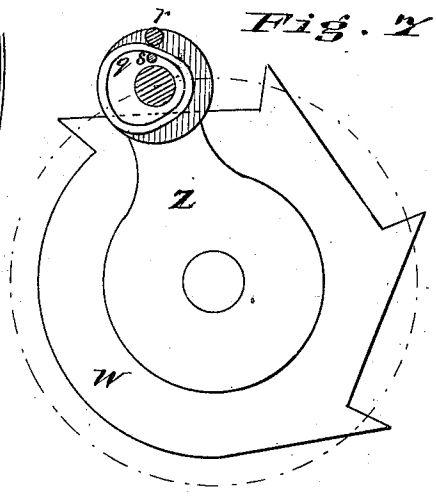

Fig. 8

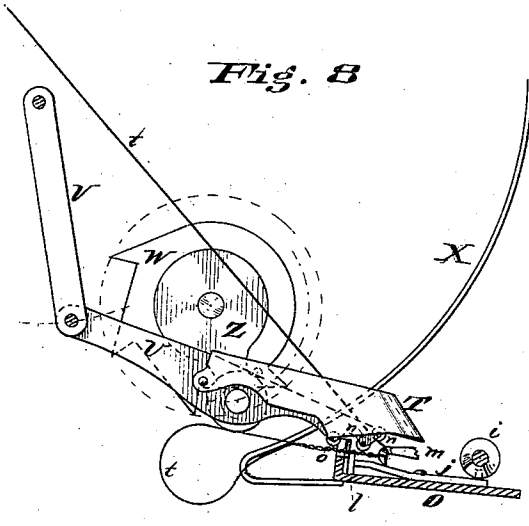

Fig. 9

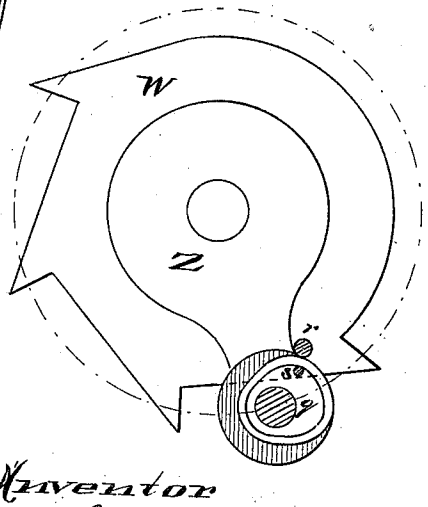

Fig. 10

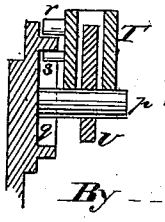

Witnesses:

C. W. Bond.

A. F. Burns.

Inventor

John F. Hollister

By Wm. F. Bond & Co.

Attorneys.

N. PETERS, PHOTO-LITHOGRAPHER, WASHINGTON, D. C.

UNITED STATES PATENT OFFICE.

JOHN F. HOLLISTER, OF PLANO, ILLINOIS.

IMPROVEMENT IN GRAIN-BINDERS.

Specification forming part of Letters Patent No. **193,817**, dated August 7, 1877; application filed April 12, 1876.

To all whom it may concern:

Be it known that I, JOHN F. HOLLISTER, of Plano, Kendall county, State of Illinois, have invented new and useful Improvements in Grain-Binders for Harvesters, of which the following is a full description, reference being had to the accompanying drawings, in which—

Figure 1 is an end view; Fig. 2, a side view; Fig. 3, a perspective view of the wire-carrier and compressor; Fig. 4, a perspective view of the twisting and cutting devices; Fig. 5, a section of the driving-chain; Figs. 6, 7, 8, and 9, details of the wire-carrier and compressor; Fig. 10, a detail, in section, of the wire-arm and hood. The figures from 3 to 10, inclusive, are enlarged.

This invention relates to that class of harvesters in which the grain is bound automatically; and the device may be used either as an attachment to a harvester or as a part of an original machine; and its nature consists in certain improvements in the devices employed for said purpose, as will be hereinafter more fully described, and pointed out by the claims.

In the drawings, A A′ represent the outer part or section of an elevator-frame of an ordinary harvesting-machine; B C, the bars forming the secondary or sliding frame; B′, the brackets or hooks for supporting the upper end of the sliding frame B C upon the frame A; C′, the cross-bar supporting the twisting devices; D, the cross-bar supporting the driving-wheel chain and sprocket-wheels; E, the long pinion; F, the driving-wheel; G, the sprocket-wheel for operating the wire-arm; H, the chain; I, the guide for holding the chain H up to the wheel G; J, the compensating-slide for taking up the slack of the chain H; K, the sprocket-wheel for driving the twisting device and cutter; L, the shaft of the wheel K; M N, the miter-wheels for rotating the twister; O, the plate supporting the twisting and cutting devices; P, the post or bar supporting the inner end of the shaft Y; Q, the frame of the wire-spool; R, the wire-spool; S S′, the tension device; T, the cap or hood of the wire-arm U; U, the wire-arm; V V′, pivoted supports for the outer end of the arm U; W, the rotary compressor or star-wheel; X, the platform upon which the grain falls; Y, the shaft of the wheel G; Z, the crank at the inner end of the shaft Y; *a b*, the side pins on the chain H; *c d*, the triangular sprocket-wheels; *e*, the spring, and *f* the stop-pin, of the wheel K; *g*, the spring, and *h* the stop-pin, of the wheel G; *i*, the cam on the shaft L for operating the cutter; *j*, the lever or pivoted bar, operated by the cam *i*; *k*, the cutter; *l*, the block on the plate O, provided with a groove or opening, into which the cutter *k* enters as the wire is severed, and which forms the fixed portion of the cutter; *m*, the twisting-hook; *n n*, the guide-wheels at the inner end of the bar U, between which the wire passes; *o*, the wheel or roller for holding the wire down to the twister and cutter; *p*, the pin partly supporting the cap or hood T; *q*, the cam-wheel, which, with the pin *r*, raises the cap T, and with the pin *s* depresses it, and prevents it from rising out of position when it strikes the grain; *t*, the binding-wire.

The machine to which these devices are to be attached may be of any suitable or ordinary construction of the harvesting-machines provided with elevators, or the machines may be specially constructed with a view to operating them, as desired.

The frame B C is most conveniently made of cross-bars, as shown; but it may be made in any other suitable form. It is attached to the main frame A A′ by means of hooks or brackets B′, which engage with the cross-bar of the frame A. It is supported in position by the bars C, which rest upon or against the cross-bar A′ of the main frame. These bars C may be provided at their lower ends with hooks similar to B′, if desired. By this arrangement the secondary frame B C may be slid or moved back and forth upon the main frame, as desired, to accommodate the binding devices to the length of the grain.

In order to prevent this sliding movement from interfering with the operation of the binding devices, a long pinion, E, is used, upon which the wheel F may slide, and remain in gear as the frame B C is slid back and forth, the pinion E being of sufficient length to maintain the gear at the extreme limits of the movement.

The shaft of the gear-wheel F is provided

with the sprocket-wheel *d*, which drives the chain H. The chain H is formed of links made of alternate single and double bars. The openings of the double-bar links pass on each side of the points of the triangular sprocket-wheels *c d*. This chain H is provided with side pins *a b*. The outside pin *a* drives the wheel G, which operates the wire-arm and compressing devices. The inside pin *b* drives the wheel K, which operates the twisting devices. These pins *a b* are so cut away as to give the wheels G K intermittent movements, so that when the wheel G is being driven the wheel K is at rest, and when the wheel K is being operated the wheel G is at rest.

In order to prevent any movement of these wheels G K by momentum, and to prevent any reaction, they are provided with spring-stops, the spring *e* and pin *f* forming the stop for the wheel K, and the spring *g* and pin *h* forming the stop for the wheel G. These stops come into operation the moment the pins *a b* cease to drive their respective wheels.

At the inner end of the shaft Y, which is revolved by the wheel G, the crank Z and compressor-wheel W are attached. The wheel W is provided with projecting points, which press down the grain as it falls upon the platform X, and pack it into a gavel ready for the tying-wire, the final compression of the gavel being completed by the arm U, which is operated by the crank Z.

The arm U is pivoted to the frame B by means of the swinging bars V V′, or other suitable devices, so that it may rise and fall, and advance and recede, according to the movements of the crank Z, to which it is connected by the crank-pin *p*. At the inner end of the bar U the anti-friction wheels *n n o* are attached. The binding-wire *t* passes between the guide-wheels *n n*, which keep it in position during the movement of the arm U. As the binding-wire passes around the gavel it comes in contact with the wheel *o*, which presses it down so as to bring it within reach of the twisting-hook *a*, between the wheels *o n*, as shown at Fig. 8.

This arm U is provided with a cap or hood, T, which is pivoted to the arm in the rear of the crank-pin *p*, as shown at Figs. 3, 6, and 8. This cap T moves with the arm U in its general movements, but it has a slight independent movement given to it by the cam *q*, which is placed around the crank-pin *p*, as shown at Figs. 7 and 8. This cam *q* is arranged so that as the cap T passes through the grain, and into the opening between the platform-plates X X′, it rises, so as to spread the grain somewhat and keep the loose grain farther away from the twister, so as to leave the space cut away between the guide-wheels *n o* clear for the operation of the twisting-hook *m*. This cap T is returned to its position, and also prevented from rising out of position when it strikes the grain, by the pin *s*, which operates upon the inside of the cam *q*. The pin *r*, operating upon the outside of the cam, keeps its movements within proper limits. This cam or eccentric *q* is firmly attached to the crank Z, and the pins *s r* traverse it once for each revolution of the crank.

The shaft L has its bearings on the plate O, and between these bearings is provided with a wheel having a cam-groove, *i*, which groove engages with a pin on the outer end of the arm *j*, and operates the cutter *k*, and is arranged to move it back and forth at proper intervals, so as to sever the binding-wire when the twisting has been completed. The blade *k*, or movable part of the cutter, enters into the stationary part of the cutter *l*, and forms a complete shear, which is not liable to get out of order.

The twisting-hook *m* is operated by the miter-wheels M N, which receive an intermittent motion from the wheel K and the pin *b*, as before described.

The twisting-hook *m* is similar in its construction and operation to that shown and described in the patent of John T. Steward, February 15, 1876, and need not therefore be further described.

In operation, power is applied to the shaft of the pinion E by suitable belts or gearing, operated from the main wheel of the harvester. A continuous movement is given to wheel F, which drives the chain H, which chain is held up to its position by the guide I, and the slack is regulated by the slide J. The pins *a b* on this chain H give the wheels G K intermittent movements, as described. The twisting devices are at rest while the arm U is passing around the gavel, and when it has passed around and the binding-wire is brought into contact with the twister, the wheel G ceases to revolve, when the pin *b* comes in contact with the wheel K, which revolves the twisting-hook *m*, and as the twisting is completed the knife *k* is advanced and the wire *t* severed, when the bound bundle falls to the ground.

The end of the wire *t*, after it is severed, remains wound around the hook *m*, and is there held for the next bundle, as shown at Fig. 8, which figure shows the wire in position, with the twist completed ready for the knife.

The movement of the crank Z draws the arm U, with its cap T, out from under the grain which has fallen while the gavel was being bound, which leaves it to fall against the wire *t*, which wire is brought around the bundle by the rising and advancing of the arm U in its next revolution, until it again comes in contact with the twisting devices, when the arm U ceases to move, and the twister operates as before.

The arm U is cut away so as to partly encircle the bundle and insure its being thrown out after the wire *t* is severed, and it also acts as a compressor in its descending movement, compressing the bundle tightly against the lower extension of the platform X X′, so as to give the bundle a good form and a tight band. As the arm U recedes the projections

of the wheel W will force down into position any grain which may have accumulated while the bundle was being tied, and will also compress and pack the grain as it falls.

The tension device S is a piece of leather or other flexible material applied directly to the wire on the spool R, and is nearly or quite equal in width to the length of that portion of the spool which holds the wire. It is held in position and given the proper tension by the spring S′, which tension may be increased or diminished by engaging the lower end of the spring S′ with a series of pins or hooks, as shown in Figs. 1 and 2, so as to give it any desired strength. By applying the flexible material directly to the wire the tension device conforms itself to the wire on the spool R, so that any unequal or irregular winding of the wire will not materially change the tension, as it will pass under the flexible material without increasing the strain on the spring S′, thereby giving an equal tension to all of the movements of the spool R, and make the operation of the binding-wire more certain.

Instead of the spring S′, any other suitable means for giving the proper tension to the binding-wire may be used.

What I claim as new, and desire to secure by Letters Patent, is as follows:

1. The wire-carrying arm U, having cap or hood T as a shield to said arm, and as a divider for the flow of grain, constructed and arranged substantially as and for the purpose set forth.

2. In a harvester, the chain H, pin *a a*, and wheel G, and the crank Z, in combination with the pin *b* and wheel K, constructed and arranged substantially as and for the purpose set forth.

3. The combination of the cap T and pins *r s* with the cam *q* and crank Z, substantially as and for the purpose set forth.

4. The compressor-wheel W, provided with projecting arms, in combination with the platform X, for forcing the grain into position and compressing it, substantially as set forth.

5. The combination of the cam *i*, arm *j*, and blade *k* with the block *l*, all constructed and operating substantially as set forth.

JOHN F. HOLLISTER.

Witnesses:
FRANK LULL,
JOHN F. STEWARD.