May 16, 1961 A. H. WINKLER 2,984,466

CARBURETOR

Filed Aug. 31, 1959

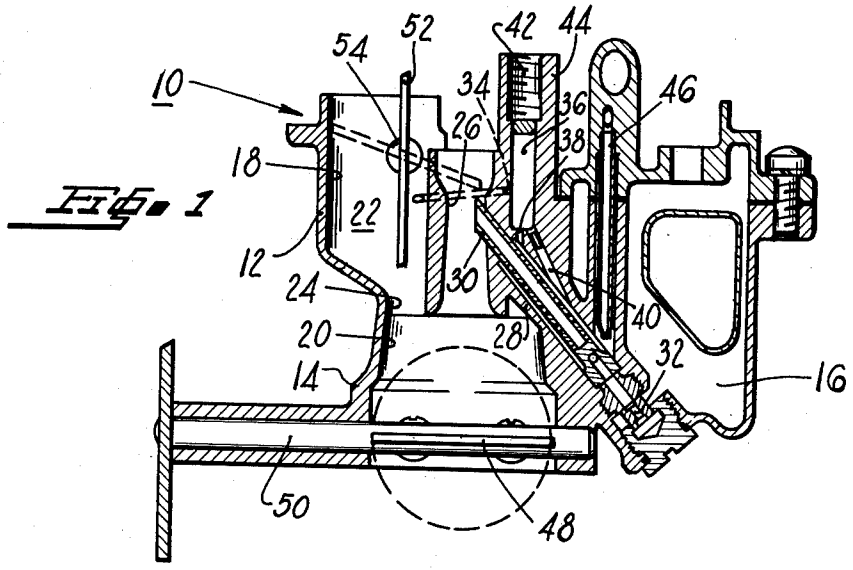

Fig. 1

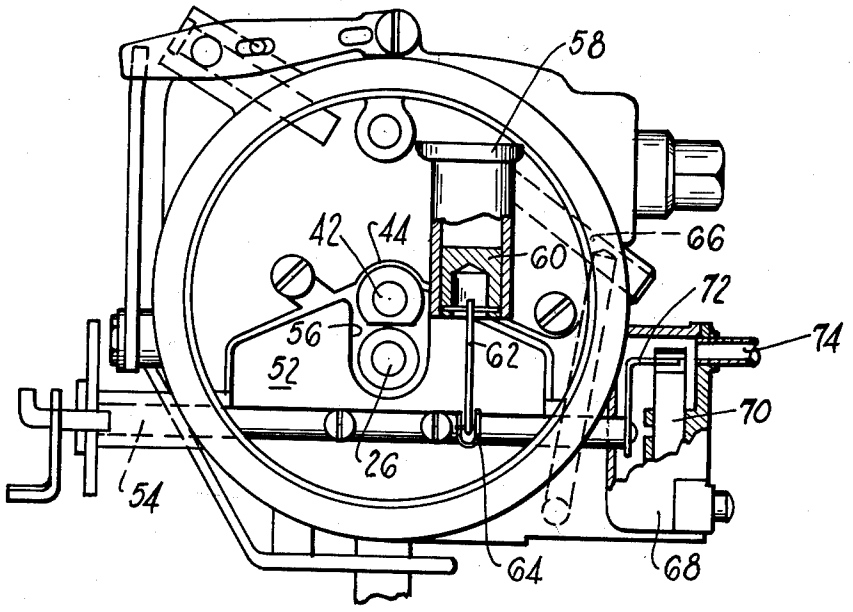

Fig. 2

INVENTOR.
ALBERT H. WINKLER
BY James L. O'Brien
ATTORNEY

United States Patent Office 2,984,466
Patented May 16, 1961

2,984,466

CARBURETOR

Albert H. Winkler, Elmira, N.Y., assignor to The Bendix Corporation, a corporation of Delaware

Filed Aug. 31, 1959, Ser. No. 837,267

2 Claims. (Cl. 261—64)

The present invention relates generally to carburetors for internal combustion engines and more particularly to a choke valve for such carburetors.

The progressive lowering of the hood lines of modern automobiles has imposed and continues to impose increasingly severe limitations on the height of carburetors. In a conventional downdraft carburetor a choke valve is mounted in an airhorn on top of the carburetor to control the air inlet of the carburetor. Various attempts have been made to shorten the airhorn portion of the carburetor such as forming the airhorn with an elbow with the air inlet and the choke valve in the horizontally extending portion of the elbow. Such prior attempts have resulted in a more expensive carburetor and/or in an inferior carburetor due to poor distribution or mixture of the fuel and air. The present invention does away with the airhorn by locating the choke valve in the main body adjacent the small venturi. In comparison with a conventional carburetor the present invention increases the air flow through the small venturi during low flow operation with the choke closed or partially closed. The increased air flow through the small venturi improves atomization of the fuel.

It is an object of the present invention to provide a choke valve having a construction such as to effect an overall reduction in the height of the carburetor.

It is a further object of the present invention to provide a choke valve construction to provide better atomization of fuel at relatively low air flows.

Other objects and advantages of the present invention will become apparent from the following description and accompanying drawings in which:

Figure 1 is a vertical sectional view of a carburetor embodying the present invention; and

Figure 2 is a top view of the carburetor shown in Figure 1.

Referring now to the drawings and more particularly to Figure 1, numeral **10** designates a carburetor having a main body **12**, a throttle body **14** and a float bowl **16**. The interior walls **18** and **20** of the main body and throttle body respectively form an induction passage designated generally by numeral **22**. A main venturi **24** is located in induction passage **22** and is formed integrally with the walls **18** and **20**. A small venturi **26** is located in induction passage **22** anterior the main venturi **24** and is adapted to discharge substantially at the throat of the main venturi. Small venturi **26** is held in position by a bracket or rib **28** which projects from the interior wall **18** of the main body. Rib **28** also carries the main discharge jet **30** which is connected to the float bowl **16** through a metering restriction **32**. The main discharge jet **30** is disposed to discharge substantially at the throat of the small venturi **26**. Rib **28** also carries air bleed **34** which through chamber **36** and branch conduits **38** and **40** is adapted to bleed air into the main discharge jet **30**. Bleed **34** is located downstream of the choke valve **52** so that when the choke valve is closed the vacuum in passage **22** causes fuel to be discharged through bleed **34**.

A tapped bore **42** formed in upwardly extending boss **44** is provided to threadedly receive the mounting bolts of an appropriate air cleaner (not shown).

Carburetor **10** is provided with a conventional idle system, a portion of which is shown at **46**. A throttle valve **48** is mounted in induction passage **22** on a throttle shaft **50** which is journalled in the walls of the throttle body **14**.

A choke valve **52** is mounted in induction passage **22** on a choke shaft **54** which is journalled in the walls of main body **12**. The choke shaft is located in the induction passage adjacent to but offset from the anterior edge of the small venturi **26** as best seen in Figure 1.

As best seen in Figure 2 the choke valve **52** is cut out to form a notch or opening **56** which is shaped to receive the small venturi **26** and bracket **28** when the choke valve **52** is in its closed position. Thus when the choke valve **52** is closed the entire air flow through induction passage **22** is directed through small venturi **26**.

A cylinder **58** is mounted on the main body containing a vacuum responsive piston **60** which is connected to the choke valve **52** by means of rod **62** and bracket **64**. Cylinder **58** is connected to induction passage **22** downstream of throttle valve **48** by means of conduit **66**. A housing **68** is mounted on main body **12** containing a thermostat **70** which has a one-way connection with choke shaft **54** through lever **72**. Housing **68** is adapted to be connected to a source of heated air (not shown) by means of conduit **74**. Housing **68** is also connected to the induction passage downstream of throttle valve **48** by a conduit (not shown).

As shown in the drawings choke valve **52** is unbalanced and when the choke valve is open the portion thereof having the longest radius extends downstream of the anterior edge of the small venturi. It is also to be noted in the drawings that when the choke valve is open it extends substantially parallel to the outside wall of the small venturi **26** to act as a vane to improve the air flow distribution in the carburetor. The location and construction of choke valve **52** is such that the conventional airhorn may be eliminated and the overall height of the carburetor reduced substantially. Furthermore, when the choke valve is closed all of the air flow through the induction passage **22** is directed through the small venturi **26** thereby increasing the velocity of air flow and thus providing for good atomization of the fuel discharged into the induction passage. The control of the choke valve by means of thermostat **70**, vacuum piston **60** and air flow acting on the unbalanced portion of choke valve **52** is well known to persons skilled in the art.

Although a particular embodiment of my invention has been described it will be understood by those skilled in the art that the objects of the invention may be attained by the use of constructions different in certain respects from that disclosed without departing from the underlying principles of the invention.

I claim:

1. In a carburetor, an induction passage, a main venturi in said passage, a small venturi, bracket means securing said small venturi to the wall of said passage in a position whereby said small venturi discharges into said main venturi, at least a portion of said small venturi being disposed in said passage anterior to said main venturi, a choke shaft in said passage adjacent to but offset from the anterior edge of said small venturi, an unbalanced choke valve mounted on said choke shaft and means defining a notch in said choke valve, said notch being shaped to receive said small venturi, said choke valve being rotatable from an open position wherein a portion of said choke valve is adjacent to said small venturi and substantially parallel to the flow axis therethrough to a closed position wherein said choke valve is transverse said passage to permit air flow only through said small venturi.

2. In a carburetor, a main body having interior walls defining an induction passage, a main venturi formed by said walls, a small venturi disposed to discharge substantially at the throat of said main venturi, bracket means connecting said small venturi to the wall of said main body, a choke shaft mounted in said body and extending transverse said passage adjacent to and offset from an anterior edge of said small venturi, an unbalanced choke valve mounted on said shaft, and a radially extending slot formed in said valve, said slot opening at one edge of said valve and being shaped to receive said small venturi and bracket when said valve is in closed position, said choke valve being rotatable from an open position wherein a portion of said valve is adjacent to said small venturi and substantially parallel to the flow axis therethrough to a closed position wherein said choke valve closes all of said passage except for said small venturi.

References Cited in the file of this patent

UNITED STATES PATENTS

2,457,570	Leibing	Dec. 28, 1948
2,752,131	Gretz	June 26, 1956