(12) INTERNATIONAL APPLICATION PUBLISHED UNDER THE PATENT COOPERATION TREATY (PCT)

(19) World Intellectual Property Organization
International Bureau

(43) International Publication Date
5 January 2017 (05.01.2017)

WIPO | PCT

(10) International Publication Number
WO 2017/001481 A1

(51) International Patent Classification:
B65D 85/10 (2006.01)

(21) International Application Number:
PCT/EP2016/065149

(22) International Filing Date:
29 June 2016 (29.06.2016)

(25) Filing Language: English

(26) Publication Language: English

(30) Priority Data:
15174659.1 30 June 2015 (30.06.2015) EP

(71) Applicant: **PHILIP MORRIS PRODUCTS S.A.** [CH/CH]; Quai Jeanrenaud 3, 2000 Neuchâtel (CH).

(72) Inventor: **CHATELAIN, Lucas**; Route du Jorat 134, 1026 Lausanne (CH).

(74) Agent: **TAYLOR, Gillian**; Reddie & Grose LLP, 16 Theobalds Road, London, Greater London WC1X 8PL (GB).

(81) Designated States *(unless otherwise indicated, for every kind of national protection available)*: AE, AG, AL, AM, AO, AT, AU, AZ, BA, BB, BG, BH, BN, BR, BW, BY, BZ, CA, CH, CL, CN, CO, CR, CU, CZ, DE, DK, DM, DO, DZ, EC, EE, EG, ES, FI, GB, GD, GE, GH, GM, GT, HN, HR, HU, ID, IL, IN, IR, IS, JP, KE, KG, KN, KP, KR, KZ, LA, LC, LK, LR, LS, LU, LY, MA, MD, ME, MG, MK, MN, MW, MX, MY, MZ, NA, NG, NI, NO, NZ, OM, PA, PE, PG, PH, PL, PT, QA, RO, RS, RU, RW, SA, SC, SD, SE, SG, SK, SL, SM, ST, SV, SY, TH, TJ, TM, TN, TR, TT, TZ, UA, UG, US, UZ, VC, VN, ZA, ZM, ZW.

(84) Designated States *(unless otherwise indicated, for every kind of regional protection available)*: ARIPO (BW, GH, GM, KE, LR, LS, MW, MZ, NA, RW, SD, SL, ST, SZ, TZ, UG, ZM, ZW), Eurasian (AM, AZ, BY, KG, KZ, RU, TJ, TM), European (AL, AT, BE, BG, CH, CY, CZ, DE, DK, EE, ES, FI, FR, GB, GR, HR, HU, IE, IS, IT, LT, LU, LV, MC, MK, MT, NL, NO, PL, PT, RO, RS, SE, SI, SK, SM, TR), OAPI (BF, BJ, CF, CG, CI, CM, GA, GN, GQ, GW, KM, ML, MR, NE, SN, TD, TG).

Published:

— *with international search report (Art. 21(3))*

WO 2017/001481 A1

(54) Title: CONTAINER WITH IMPROVED CLOSING

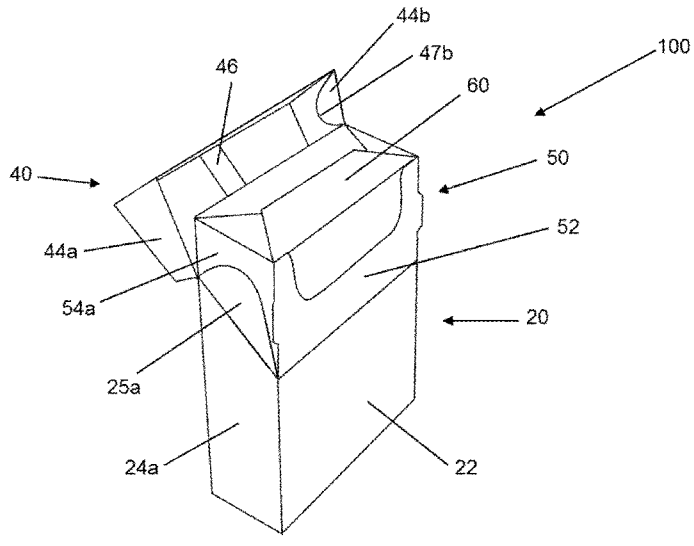

Fig. 1

(57) Abstract: A container (100) for consumer goods, the container (100) comprising a box portion (20) including a box portion front wall (22), a box portion back wall, first and second box portion side walls (24a, 24b), and a box portion bottom wall; and a lid portion (40) including a lid portion front wall, a lid portion back wall and first and second lid portion side walls (44a, 44b), the lid portion (40) depending along a hinge line from a top edge of the box portion back wall and moveable about the hinge line between an open position and a closed position. At least one of the box portion side walls (24a, 24b) comprises a positioning tab (25a), the positioning tab (25a) extending substantially coplanar with and away from the box portion side wall and having a non-linear top edge, the positioning tab (25a) being received in a recess defined by a non-linear edge (47a) in the adjacent lid portion side wall (44a) when the lid portion (40) is in the closed position. The non-linear top edge of the tab (25a) and the non-linear edge (47a) of the lid portion side wall (44a) are shaped such that the non-linear top edge of the tab (25a) engages with the non-linear edge (47a) of the lid portion side wall (44a) to align the lid portion (40) relative to the box portion (20) when the lid portion (40) is in the closed position.

CONTAINER WITH IMPROVED CLOSING

The present invention relates to a container for consumer goods having a box portion and a lid portion depending along a hinge line from the box portion back wall and moveable about the hinge line between an open position and a closed position. The invention finds particular application as a container for elongate smoking articles such as cigarettes. The present invention also relates to laminar blanks for forming such containers.

It is known to package elongate aerosol-generating articles and other consumer goods in containers formed from folded laminar blanks. Elongate aerosol-generating articles, such as cigarettes and cigars, are commonly sold in hinge-lid packs having a box for housing the aerosol-generating articles and a lid connected to the box about a hinge line extending across the back wall of the container. The front and side walls of the box typically abut the corresponding front and side walls of the lid when the lid is closed. The hinge-lid pack may also comprise an inner frame secured to an inner surface of the box, the inner frame having front and side walls against which the lid closes. Such packs are typically constructed from laminar cardboard blanks. In use, the lid is pivoted about the hinge line to open the pack and so gain access to the aerosol-generating articles held in the box. Generally, the hinge line across the back wall of the container is higher than the line of abutment between the front wall of the box and the front wall of the lid. As a consequence, the line of abutment between the box and lid side walls typically slopes diagonally downwards from the back of the container to the front.

In some cases, it may be difficult to align the lid and box in the frontal direction when the lid is closed. This may result in poor appearance, particularly where designs are applied on the box and lid side walls so that one or more designs extend across the line of abutment between the box and lid side walls.

It would be desirable to provide a container for consumer goods that has an improved alignment of lid and box portions when the lid is closed.

According to a first aspect of the present invention, there is provided a container for consumer goods, the container comprising: a box portion including a box portion front wall, a box portion back wall, first and second box portion side walls, and a box portion bottom wall; and a lid portion including a lid portion front wall, a lid portion back wall and first and second lid portion side walls, the lid portion depending along a hinge line from a top edge of the box portion back wall and moveable about the hinge line between an open position and a closed position, wherein at least one of the box portion side walls comprises a

positioning tab, the positioning tab extending substantially coplanar with and away from the box portion side wall and having a non-linear top edge, the positioning tab being received in a recess defined by a non-linear edge in the adjacent lid portion side wall when the lid portion is in the closed position, and wherein the non-linear top edge of the tab and the non-linear edge of the lid portion side wall are shaped such that the non-linear top edge of the tab engages with the non-linear edge of the lid portion side wall to align the lid portion relative to the box portion when the lid portion is in the closed position.

As used herein the terms “side”, “top”, “bottom”, “front”, “back” and other terms used to describe relative positions of the components of containers according to the invention refer to the container in an upright position with the lid portion at the top and the box portion bottom wall at the bottom. When describing containers according to the present invention, these terms are used irrespective of the orientation of the container being described.

As used herein the term “hinge line” refers to a line about which two elements may be pivoted relative to each other. A hinge line may be, for example, a fold line, a perforation line or a score line in a wall or panel of the container. Where the hinge line is a perforation line, the perforation line may be used to remove parts of the container.

The term “panel” is used herein to refer to a portion of the container formed from a single, continuous portion of material. A panel may depend along one or more fold lines from one or more other panels. The term “flap” refers to a panel that depends along only one fold line from only one other panel.

The term “wall” refers more generally to a facet of the container, and a wall may be formed from a single panel or flap, or a wall may be formed from two or more abutting or overlapping panels or flaps.

Advantageously, the configuration of containers according to the present invention, may allow correct relative alignment of the lid portion and the box portion to be more easily achieved and maintained, improving the appearance of the container when the lid is in the closed position, without changing the appearance of the lid portion when in an open position.

The non-linear top edge of the tab and the non-linear edge of the lid portion side wall may be shaped such that the non-linear top edge of the tab engages with the non-linear edge of the lid portion side wall to align the lid portion relative to the box portion in the frontal direction when the lid portion is in the closed position.

As used herein, the term “frontal direction” refers to the direction from the rear to the front of the container along a line perpendicular to the plane of the front wall of the container.

Where the container is a rectangular parallelepiped the frontal direction is parallel to the plane of the side walls.

The shape of the non-linear edge of the lid portion side wall and the shape of the non-linear top edge of the positioning tab may be complementary. For example, the shape of the non-linear edge of the lid portion side wall may substantially follow the shape of the non-linear top edge of the positioning tab.

The non-linear edge of the lid portion side wall and the non-linear top edge of the positioning tab may have any suitable non-linear shape. For example, one or both of the non-linear edge of the lid portion side wall and the non-linear top edge of the positioning tab may be curved. In certain embodiments, the positioning tab may have a curved top edge and the recess in the adjacent lid portion side wall may be defined by a curved edge.

As used herein, the terms “curved edge” and “curved top edge” refer to an edge having an arc-like shape. This includes edges having circular arc, parabolic arc, hyperbolic arc and elliptical arc shapes.

The container may further comprise an inner frame attached to the inside of the box portion, the inner frame including first and second inner frame side walls adjacent to the first and second box portion side walls, respectively. In such embodiments, preferably, at least part of the positioning tab is overlapped by the adjacent inner frame side wall. Advantageously, this allows the side profile of the container when the lid is in an open position to remain at least partially the same as the side profile of a container without a positioning tab. This can help to minimise any differences in appearance that may otherwise have been created on the container by virtue of the positioning tab. The inner frame may also act to restrict the amount by which the positioning tab can be bent inwards. In addition, the inner frame may act as a partial barrier between the positioning tab and consumer goods, such as smoking articles, held within the container, reducing interference between the positioning tab and the consumer goods. This may be particularly noticeable when the container is only partially full, since the consumer goods may be more able to lean sideways in the container in the direction of the positioning tab.

Where the container further comprises an inner frame attached to the inside of the box portion, preferably the entire positioning tab, or substantially the entire positioning tab, is overlapped by the adjacent inner frame side wall. With this arrangement, when the lid is in an open position, the side profile of the container is unaffected by the presence of the positioning tab.

Where the container further comprises an inner frame attached to the inside of the box portion, the positioning tab may be spaced apart from the adjacent inner frame side wall such that a clearance exists between the positioning tab and the adjacent inner frame side wall. Alternatively, the positioning tab may be in indirect contact with the adjacent inner frame side wall via one or more intermediate components. Preferably, the positioning tab is in direct contact with the adjacent inner frame side wall. With this arrangement, the inner frame may advantageously support the positioning tab and restrict the amount by which the positioning tab can be bent inwards. In some particularly preferred embodiments, the positioning tab is in direct contact with the adjacent inner frame side wall and substantially the entire positioning tab is overlapped by the adjacent inner frame side wall.

Where the container further comprises an inner frame attached to the inside of the box portion, the positioning tab may be secured to the adjacent inner frame side wall along at least part of the inner surface of the positioning tab. For example, the positioning tab may be in direct contact with the adjacent inner frame side wall and secured to the adjacent inner frame side wall along at least part of the inner surface of the positioning tab using an adhesive. Alternatively, the positioning tab be secured to the adjacent inner frame side wall along at least part of the inner surface of the positioning tab via one or more intermediate components. For example, positioning tab may be secured to the adjacent inner frame side wall along at least part of the inner surface of the positioning tab via one or more intermediate components using an adhesive, the one or more intermediate components being secured to both the positioning tab and the adjacent inner frame side wall. The positioning tab may be secured to the adjacent inner frame side wall along substantially the entire area of overlap between the positioning tab and the adjacent inner frame side wall. In certain embodiments, substantially the entire positioning tab is overlapped by the adjacent inner frame side wall and is secured to the adjacent inner frame side wall along substantially the entire inner surface of the positioning tab.

In any of the embodiments described above, one of the positioning tab and the recess may comprise a protrusion that engages a complementary notch in the other of the positioning tab and the recess to resist opening of the lid portion when the lid portion is in the closed position.

Preferably, the protrusion and the recess are shaped to resist closing of the lid portion as the protrusion is slid over the recess and to positively close the lid portion when the protrusion and the recess are fully engaged. This can provide a user with a tactile, audible, or both tactile and audible indication that the lid portion has moved into, moved out

of, or both moved into and out of the closed position. This can also help to retain the lid portion in the closed position during normal handling and storage, and therefore prevent the lid portion inadvertently moving with respect to the box portion.

Preferably, the protrusion is defined by the non-linear edge of the lid portion side wall and the notch is provided in the positioning tab.

Preferably, the protrusion and the complementary notch are located towards the front of the container when the lid portion is in the closed position. This can help to localise the engagement of the protrusion and notch to positions that are at or around the closed position. Consequently, the majority of the movement of the lid portion relative to the box portion can remain unaffected by the features of the protrusion and the notch.

Preferably, each box portion side wall comprises an inner panel and an outer panel. In such embodiments, the positioning tab preferably forms part of the inner panel. This can advantageously provide an easy way to ensure that the positioning table can be in direct contact with an inner frame side wall, if present. Furthermore, this can also ensure that the outer surface of the box portion side wall does not need to be modified to accommodate the positioning tab.

Preferably, each lid portion side wall comprises an inner panel and an outer panel. In such embodiments, the recess is preferably defined by the inner panel of a lid portion side wall. This can advantageously ensure that the outer surface of the lid portion side wall does not need to be modified to accommodate the recess.

The container may be provided such that only one box portion side wall comprises a positioning tab and only one lid portion side wall has a non-linear edge that defines a complementary recess for the positioning tab. However, in particularly preferred embodiments, each box portion side wall comprises a positioning tab and wherein a recess is defined by a non-linear edge in each of the adjacent lid portion side walls, the non-linear top edge of each positioning tab and the non-linear edge of each of the lid portion side walls being shaped such that the non-linear top edge of each tab engages with the non-linear edge of each lid portion side wall to align the lid portion relative to the box portion when the lid portion is in the closed position. This arrangement can help to maximise the correct relative alignment between the lid portion and the box portion, and can take advantage of any symmetry that exists between the two side walls of the container.

The container may contain any suitable consumer goods, such as smoking articles or confectionary. In preferred embodiments, the container contains a bundle of smoking articles, for example, a bundle of cigarettes.

The container, and in particular the box portion and the lid portion of the container, may be formed of any suitable material. However, preferably the container, and in particular the box portion and the lid portion of the container, is formed from one or more folded laminar blanks. In particularly preferred embodiments the box portion and the lid portion are together formed from a single folded laminar blank. In such embodiments, the container may include an inner frame, which is formed from a folded inner frame laminar blank.

Accordingly, according to a second aspect of the present invention, there is provided a laminar blank for manufacturing a container according to any preceding claim.

It shall be appreciated that any features described with reference to one aspect of the present invention are equally applicable to any other aspect of the present invention.

The term “aerosol-generating article” is used herein to mean an article comprising at least one substrate that forms an aerosol when heated. As known to those skilled in the art, an aerosol is a suspension of solid particles or liquid droplets in a gas, such as air. The aerosol may be a suspension of solid particles and liquid droplets in a gas, such as air. For example, the aerosol-generating article may be an article for use in an electrically operated smoking system. In this case, the aerosol-generating article may comprise a tobacco or other nicotine-containing substrate that generates an aerosol comprising nicotine when the substrate is heated. Alternatively, the aerosol-generating article may comprise a more conventional smoking article, such as a filter cigarette.

Containers according to the invention find particular application as packs for elongate smoking articles or aerosol-generating articles such as, for example, cigarettes, cigars or cigarillos. It will be appreciated that through appropriate choices of the dimensions thereof, containers according to the invention may be designed for different numbers of conventional size, king size, super-king size, slim or super-slim cigarettes. Alternatively, other consumer goods may be housed inside the container.

Through an appropriate choice of the dimensions, containers according to the invention may be designed to hold different total numbers of smoking articles, or different arrangements of smoking articles. For example, through an appropriate choice of the dimensions, containers according to the invention may be designed to hold a total of between ten and thirty smoking articles.

The smoking articles may be arranged in different collations, depending on the total number of smoking articles.

The exterior surfaces of containers according to the invention may be printed, embossed, debossed or otherwise embellished with manufacturer or brand logos, trade marks, slogans and other consumer information and indicia.

The invention will be further described, by way of example, with reference to the drawings in which:

Figure 1 is a side view a container for consumer goods, according to a first embodiment of the present invention;

Figure 2 is an overhead view of a laminar blank for forming the container of the first embodiment of the present invention, shown in an unfolded condition.

Figure 3 is a partial side view a container for consumer goods, according to a second embodiment of the present invention;

Figures 1 shows a perspective view of a container 100 according to a first embodiment of the present invention. The container 100 contains a wrapped bundle of consumer goods 60, such as a bundle of cigarettes.

The container is formed from a folded laminar blank and has a lid portion 40 and a box portion 20. The lid portion has a first lid side wall 44a, a second lid side wall 44b, and a lid top wall 46. The lid portion also has a lid front wall and a lid back wall (not shown in Figure 1). The box portion 20 has a box front wall 22, and a first box side wall 24a. The box portion 20 also has a box bottom wall, a box back wall and a second box side wall (not shown in Figure 1). The lid 40 depends along a hinge line (not shown in Figure 1) from a top edge of the box back wall, and is movable about the hinge line between an open position (as shown in Figure 1) and a closed position.

An inner frame 50 is attached to the inside of the box 20 and includes a first inner frame side wall (54a), a second inner frame side wall (not shown in Figure 1), and an inner frame front wall 52.

The first box side wall 24a has a positioning tab 25a extending substantially coplanar with and away from the first box side wall 24a. A similar positionig tab also exists on the second box side wall, although this is not visible in Figure 1.

The first lide side wall 44a has a curved edge on its inner surface that defines a recess in which the the positioning tab 25a of the first box side wall 24a can be received when the lid 40 is in the closed position. This is not visible in Figure 1, but a similar cuved edge 47b and resultant recess can be seen in the second lid side wall 44b.

Figure 2 shows an overhead view of a laminar blank 101 for forming the container 100 of Figure 1. The laminar blank 101 is shown in an unfolded condition. Continuous lines

represent cut lines in the laminar blank 101, and dotted lines represent fold lines in the laminar blank 101.

As can be seen in Figure 2, the laminar blank 101 includes two panels that overlap (when folded) to form the first box side wall 24a, and two panels that overlap (when folded) to form the second box side wall 24b.

Two curved cuts 47a and 47b are made in the laminar blank 101 to respectively define the curved edges of the first lid side wall 44a and second lid side wall 44b. These also respectively define the positioning tab 25a of the first box side wall 24a and the positioning tab 25b of the second box side wall 24b. These two cut lines provide a simple and effective way to ensure that the non-linear top edge of the position tabs and the non-linear edges of the lid portion side walls engage with one another to align the lid portion relative to the box portion in the frontal direction when the lid portion is in the closed position.

Figure 3 shows a partial side view a container 200 for consumer goods, according to a second embodiment of the present invention.

In Figure 3, the curved edge 147a of the first lid side wall 144a defines a protrusion 129a in the first lid side wall 144a that engages with a complementary notch 128a in the positioning tab 125a of the first box side wall 124a. As shown in Figure 3, the protrusion 129a and the notch 128a are located towards the front of the container 200 when the lid 140 is in the closed position relative to the box 120.

CLAIMS

1. A container for consumer goods, the container comprising:

a box portion including a box portion front wall, a box portion back wall, first and second box portion side walls, and a box portion bottom wall; and

a lid portion including a lid portion front wall, a lid portion back wall and first and second lid portion side walls, the lid portion depending along a hinge line from a top edge of the box portion back wall and moveable about the hinge line between an open position and a closed position,

wherein at least one of the box portion side walls comprises a positioning tab, the positioning tab extending substantially coplanar with and away from the box portion side wall and having a non-linear top edge, the positioning tab being received in a recess defined by a non-linear edge in the adjacent lid portion side wall when the lid portion is in the closed position, and

wherein the non-linear top edge of the tab and the non-linear edge of the lid portion side wall are shaped such that the non-linear top edge of the tab engages with the non-linear edge of the lid portion side wall to align the lid portion relative to the box portion when the lid portion is in the closed position.

2. A container according to claim 1, further comprising an inner frame attached to the inside of the box portion, the inner frame including first and second inner frame side walls adjacent to the first and second box portion side walls, respectively, wherein at least part of the positioning tab is overlapped by the adjacent inner frame side wall.

3. A container according to claim 2, wherein the entire positioning tab is overlapped by the adjacent inner frame side wall.

4. A container according to claim 2 or 3, wherein the positioning tab is in direct contact with the adjacent inner frame side wall.

5. A container according to any of claims 2 to 4, wherein the positioning tab is secured to the adjacent inner frame side wall along at least part of the inner surface of the positioning tab.

6. A container according to any preceding claim, wherein one of the positioning tab and the recess comprises a protrusion that engages a complementary notch in the other of the positioning tab and the recess to resist opening of the lid portion when the lid portion is in the closed position.

7. A container according to claim 6, wherein the protrusion and the recess are shaped to resist closing of the lid portion as the protrusion is slid over the recess and to positively close the lid portion when the protrusion and the recess are fully engaged.

8. A container according to claim 6 or claim 7, wherein the protrusion is defined by the non-linear edge of the lid portion side wall and the notch is provided in the positioning tab.

9. A container according to any of claims 6 to 8, wherein the protrusion and the complementary notch are located towards the front of the container when the lid portion is in the closed position.

10. A container according to any preceding claim, wherein each box portion side wall comprises an inner panel and an outer panel, and wherein the positioning tab forms part of the inner panel.

11. A container according to any preceding claim, wherein each lid portion side wall comprises an inner panel and an outer panel, and wherein the recess is defined by the inner panel.

12. A container according to any preceding claim, wherein each box portion side wall comprises a positioning tab and wherein a recess is defined by a non-linear edge in each of the adjacent lid portion side walls, the non-linear top edge of each positioning tab and the non-linear edge of each of the lid portion side walls being shaped such that the non-linear top edge of each tab engages with the non-linear edge of each lid portion side wall to align the lid portion relative to the box portion when the lid portion is in the closed position.

13. A container according to any preceding claim, wherein the container contains a bundle of smoking articles.

14. A laminar blank for manufacturing a container according to any preceding claim.

15. The laminar blank of claim 14, wherein the non-linear top edge of the positioning tab and the non-linear edge of the lid portion side wall are formed from a single cut line.

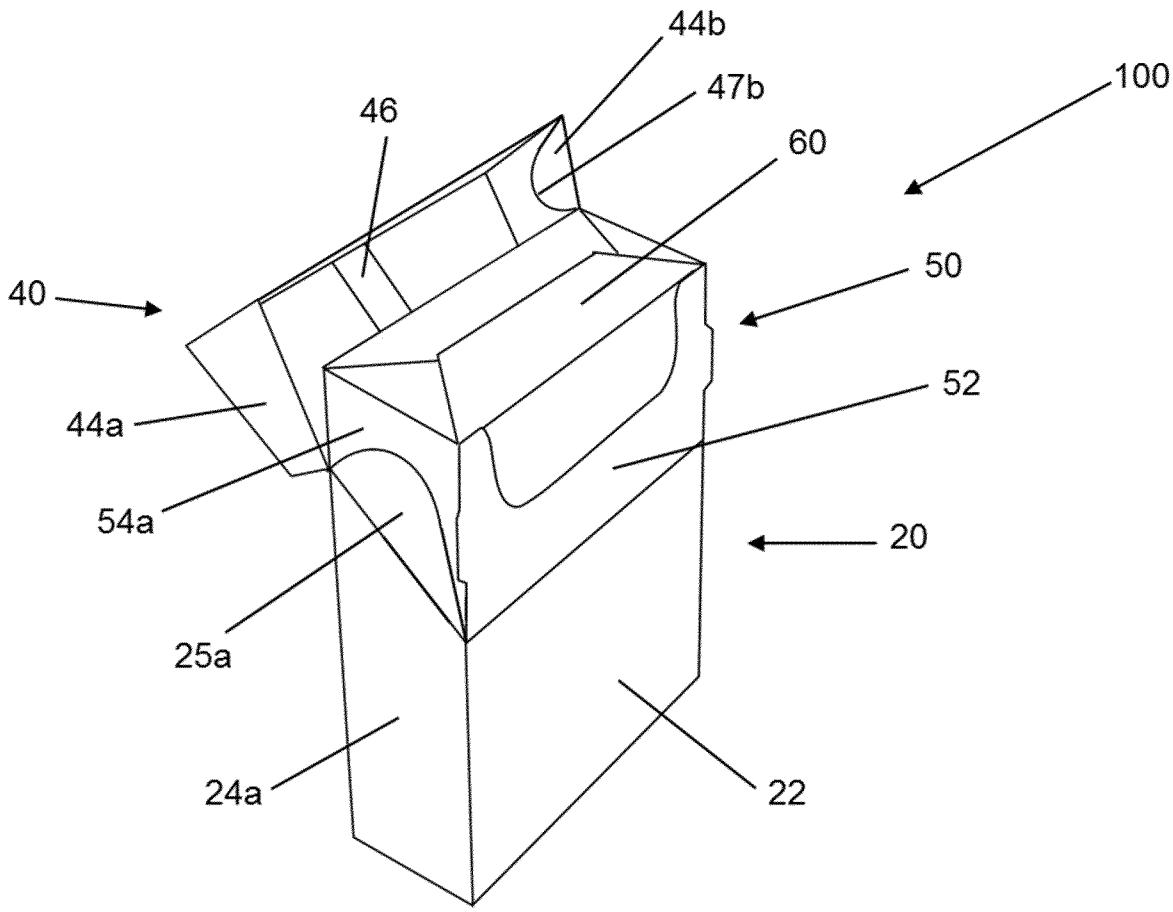

Fig. 1

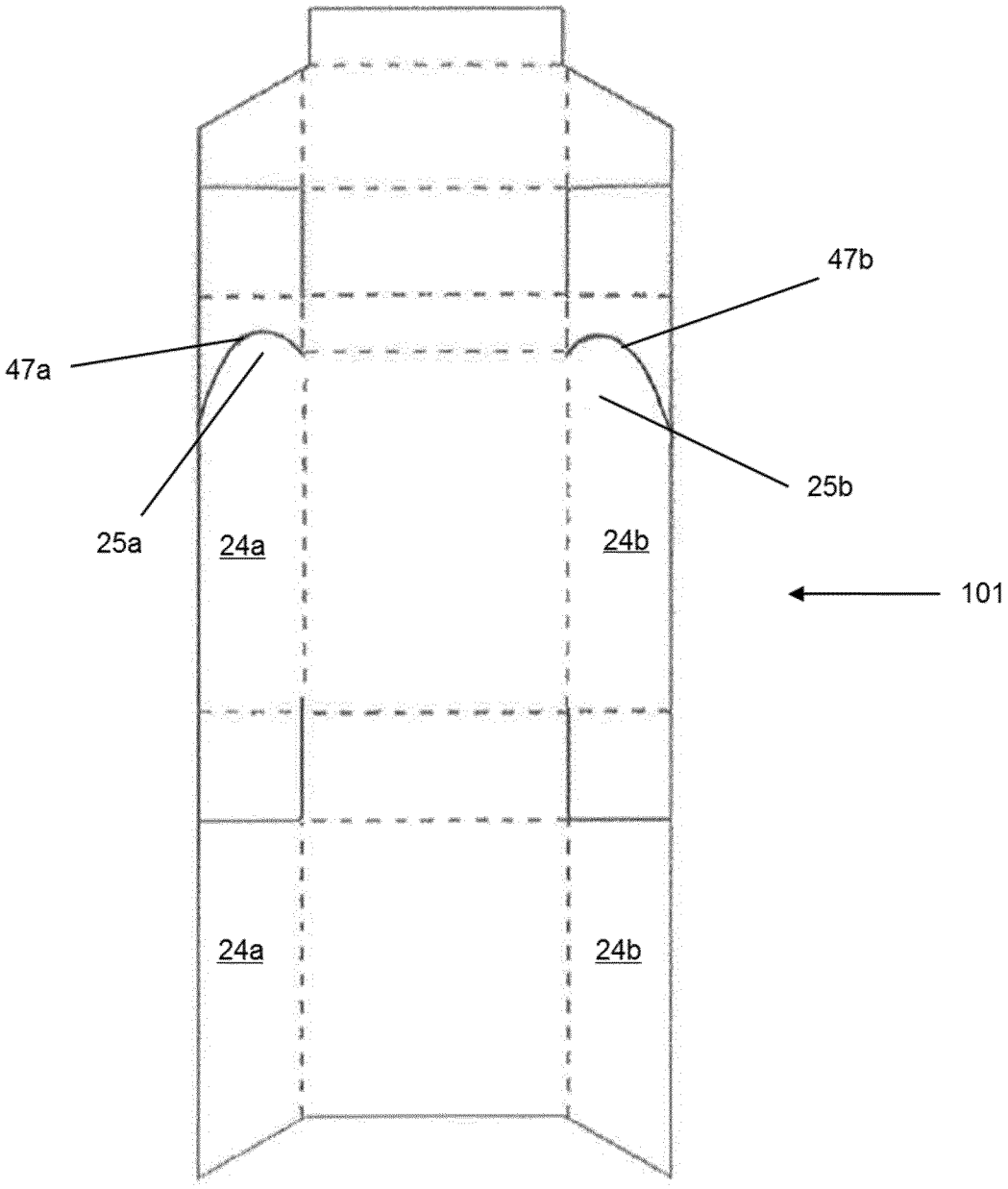

Fig. 2

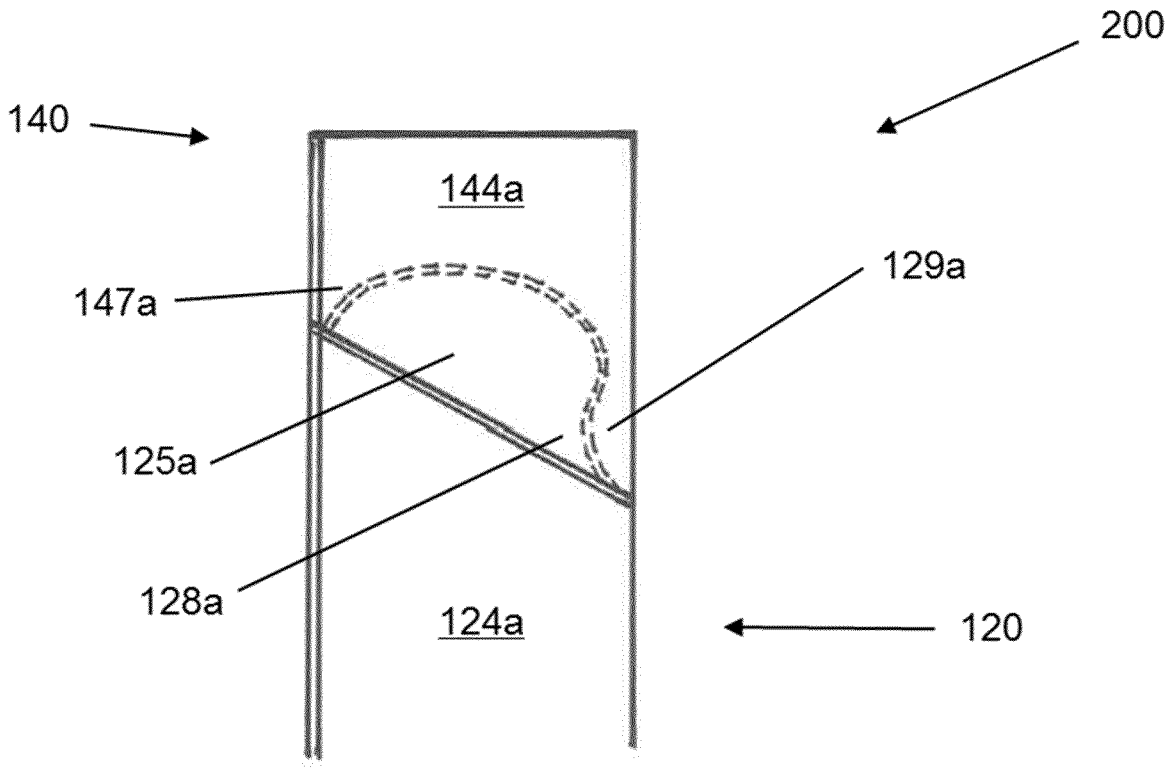

Fig. 3

INTERNATIONAL SEARCH REPORT

International application No
PCT/EP2016/065149

A. CLASSIFICATION OF SUBJECT MATTER
INV. B65D85/10
ADD.

According to International Patent Classification (IPC) or to both national classification and IPC

B. FIELDS SEARCHED

Minimum documentation searched (classification system followed by classification symbols)
B65D

Documentation searched other than minimum documentation to the extent that such documents are included in the fields searched

Electronic data base consulted during the international search (name of data base and, where practicable, search terms used)
EPO-Internal, WPI Data

C. DOCUMENTS CONSIDERED TO BE RELEVANT

Category*	Citation of document, with indication, where appropriate, of the relevant passages	Relevant to claim No.
X	DE 196 48 240 A1 (FOCKE & CO [DE]) 28 May 1998 (1998-05-28) the whole document	1-15
Y	WO 2010/003697 A1 (PHILIP MORRIS PROD [CH]) 14 January 2010 (2010-01-14) the whole document	1-6, 10-15
Y	US 2009/084694 A1 (AGIRBAS ERDINC [DE]) 2 April 2009 (2009-04-02) the whole document	1-6, 10-15
A	WO 2008/087378 A1 (BRITISH AMERICAN TOBACCO CO [GB]; HOLFORD STEVEN [GB]) 24 July 2008 (2008-07-24) the whole document	1-15

☐ Further documents are listed in the continuation of Box C.

☒ See patent family annex.

* Special categories of cited documents :

"A" document defining the general state of the art which is not considered to be of particular relevance

"E" earlier application or patent but published on or after the international filing date

"L" document which may throw doubts on priority claim(s) or which is cited to establish the publication date of another citation or other special reason (as specified)

"O" document referring to an oral disclosure, use, exhibition or other means

"P" document published prior to the international filing date but later than the priority date claimed

"T" later document published after the international filing date or priority date and not in conflict with the application but cited to understand the principle or theory underlying the invention

"X" document of particular relevance; the claimed invention cannot be considered novel or cannot be considered to involve an inventive step when the document is taken alone

"Y" document of particular relevance; the claimed invention cannot be considered to involve an inventive step when the document is combined with one or more other such documents, such combination being obvious to a person skilled in the art

"&" document member of the same patent family

Date of the actual completion of the international search	Date of mailing of the international search report
20 July 2016	01/08/2016

Name and mailing address of the ISA/	Authorized officer
European Patent Office, P.B. 5818 Patentlaan 2 NL - 2280 HV Rijswijk Tel. (+31-70) 340-2040, Fax: (+31-70) 340-3016	Ungureanu, Mirela

1

INTERNATIONAL SEARCH REPORT

Information on patent family members

International application No
PCT/EP2016/065149

Patent document cited in search report	Publication date	Patent family member(s)	Publication date
DE 19648240 A1	28-05-1998	DE 19648240 A1	28-05-1998
		JP H10236471 A	08-09-1998
		US 5904244 A	18-05-1999
WO 2010003697 A1	14-01-2010	NONE	
US 2009084694 A1	02-04-2009	NONE	
WO 2008087378 A1	24-07-2008	AR 064913 A1	06-05-2009
		AT 493351 T	15-01-2011
		AU 2008206836 A1	24-07-2008
		BR PI0806459 A2	06-09-2011
		CA 2674817 A1	24-07-2008
		CL 2008000071 A1	25-07-2008
		CN 101583538 A	18-11-2009
		EA 200900917 A1	26-02-2010
		EP 2125539 A1	02-12-2009
		ES 2356107 T3	05-04-2011
		HK 1139111 A1	11-05-2012
		JP 5313921 B2	09-10-2013
		JP 2010515632 A	13-05-2010
		KR 20090104100 A	05-10-2009
		MY 146522 A	15-08-2012
		TW 200836648 A	16-09-2008
		UA 95508 C2	10-08-2011
		US 2010126889 A1	27-05-2010
		US 2013168271 A1	04-07-2013
		WO 2008087378 A1	24-07-2008