(12) INTERNATIONAL APPLICATION PUBLISHED UNDER THE PATENT COOPERATION TREATY (PCT)

(19) World Intellectual Property Organization
International Bureau

(43) International Publication Date
24 August 2017 (24.08.2017)

WIPO | PCT

(10) International Publication Number
WO 2017/139853 A1

(51) International Patent Classification:
*A61F 9/008* (2006.01) *A61B 3/135* (2006.01)

(21) International Application Number:
PCT/AU2017/050143

(22) International Filing Date:
17 February 2017 (17.02.2017)

(25) Filing Language: English

(26) Publication Language: English

(30) Priority Data:
2016900571 18 February 2016 (18.02.2016) AU

(71) Applicant: **ELLEX MEDICAL PTY LTD** [AU/AU]; 82 Gilbert Street, Adelaide, South Australia 5000 (AU).

(72) Inventors: **HAARHOFF, David**; 82 Gilbert Street, Adelaide, South Australia 5000 (AU). **FRIEBEL, Marcus**; 82 Gilbert Street, Adelaide, South Australia 5000 (AU).

(74) Agent: **FISHER ADAMS KELLY CALLINANS**; Level 6, 175 Eagle Street, Brisbane, Queensland 4000 (AU).

(81) Designated States *(unless otherwise indicated, for every kind of national protection available)*: AE, AG, AL, AM, AO, AT, AU, AZ, BA, BB, BG, BH, BN, BR, BW, BY, BZ, CA, CH, CL, CN, CO, CR, CU, CZ, DE, DJ, DK, DM, DO, DZ, EC, EE, EG, ES, FI, GB, GD, GE, GH, GM, GT, HN, HR, HU, ID, IL, IN, IR, IS, JP, KE, KG, KH, KN, KP, KR, KW, KZ, LA, LC, LK, LR, LS, LU, LY, MA, MD, ME, MG, MK, MN, MW, MX, MY, MZ, NA, NG, NI, NO, NZ, OM, PA, PE, PG, PH, PL, PT, QA, RO, RS, RU, RW, SA, SC, SD, SE, SG, SK, SL, SM, ST, SV, SY, TH, TJ, TM, TN, TR, TT, TZ, UA, UG, US, UZ, VC, VN, ZA, ZM, ZW.

(84) Designated States *(unless otherwise indicated, for every kind of regional protection available)*: ARIPO (BW, GH, GM, KE, LR, LS, MW, MZ, NA, RW, SD, SL, ST, SZ, TZ, UG, ZM, ZW), Eurasian (AM, AZ, BY, KG, KZ, RU, TJ, TM), European (AL, AT, BE, BG, CH, CY, CZ, DE, DK, EE, ES, FI, FR, GB, GR, HR, HU, IE, IS, IT, LT, LU, LV, MC, MK, MT, NL, NO, PL, PT, RO, RS, SE, SI, SK, SM, TR), OAPI (BF, BJ, CF, CG, CI, CM, GA, GN, GQ, GW, KM, ML, MR, NE, SN, TD, TG).

*[Continued on next page]*

(54) Title: A CONTROL DEVICE FOR AN OPHTHALMIC LASER

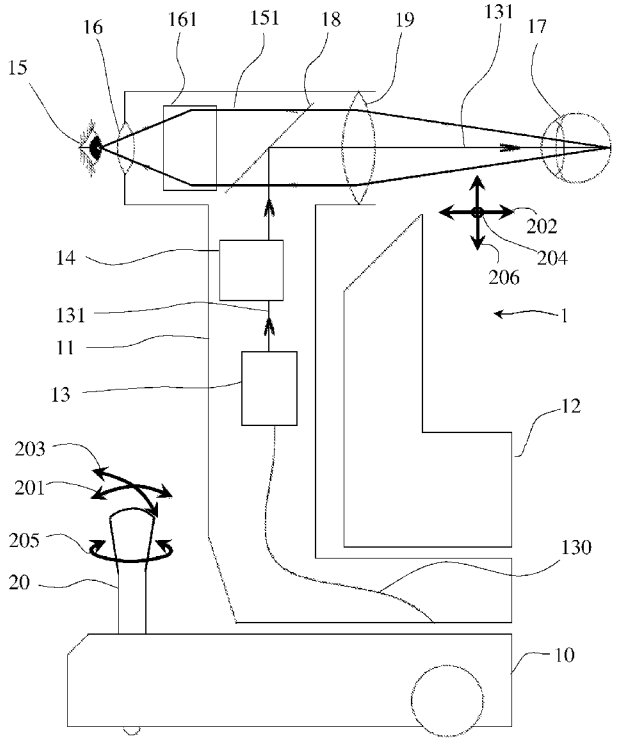


FIG 1

(57) Abstract: A control device for a slit lamp assembly including a laser that generates a treatment spot pattern. The control device is in the form of a joystick with a joystick lower part having forwards, backwards, left and right movement that translates to forwards, backwards, left and right movement of the slit lamp assembly and a joystick upper part including a mini joystick having forwards, backwards, left and right movement that translates to upwards, downwards, left and right movement of the treatment spot pattern at a treatment plane. The control device further includes one or more option keys providing one or more of the functions of: select treatment spot pattern; cycle through available treatment spot patterns; change the size of the treatment spot pattern; change the spacing of the spots of the treatment spot pattern; change the size of the spots of the treatment spot pattern; rotate a treatment spot pattern. Also described is a method of using the control device to control an ophthalmic laser and slit lamp assembly.

WO 2017/139853 A1

**Published**:

— *with international search report (Art. 21(3))*

# TITLE

## A CONTROL DEVICE FOR AN OPHTHALMIC LASER

## FIELD OF THE INVENTION

The present invention relates to the field of ophthalmology and in particular to a device for manipulation of a laser device for use in ophthalmology. More particularly, the invention relates to a control device for an ophthalmic laser.

## BACKGROUND TO THE INVENTION

One of the most common pieces of equipment used in ophthalmology is the slit lamp microscope. A typical slit lamp microscope consists of a joystick, Illumination source, magnification module (and binocular) and the microscope objective. The slit lamp microscope allows the surgeon to visualise objects located at the target plane of the microscope.

The joystick is used to position the slit lamp such that the target plane and viewing area are aligned with the specific anatomy to be treated. Moving the joystick forwards and backwards, relative to the surgeon, moves the slit lamp forwards and backwards. Moving the joystick left and right (relative to the surgeon's position) moves the slit lamp left and right. Rotating the joystick about its own axis will raise or lower the slit lamp. These functions are common among all slit lamp microscopes and are very familiar to ophthalmic surgeons.

In recent years a number of treatment modalities have been developed that apply a scan of laser spots onto the retina. The lasers for these treatments are called pattern scan lasers. Typically a pattern scan laser delivers spots sequentially to produce a treatment pattern. In our co-pending application we describe a pattern laser that delivers multiple spots in a single laser pulse. In either case, the user needs a more effective way to control treatment than is possible with the existing slit lamp assembly.

## SUMMARY OF THE INVENTION

In one form, although it need not be the only or indeed the broadest form, the invention resides in a control device for a slit lamp assembly including a laser that generates a treatment spot pattern, the control device comprising:

a joystick lower part having forwards, backwards, left and right movement that translates to forwards, backwards, left and right movement of the slit lamp assembly; and

a joystick upper part associated with the joystick lower part, the joystick upper part includinga mini joystick having forwards, backwards, left and right movement that translates to upwards, downwards, left and right movement of the treatment spot pattern at the treatment plane.

The joystick suitably includes one or more option keys providing one or more of the functions of: selecting treatment spot pattern; cycling through available treatment spot patterns; change the size of the treatment spot pattern; change the spacing of the spots of the treatment spot pattern; change the size of the spots of the treatment spot pattern; rotate the treatment spot pattern. The option keys are preferably associated with the joystick upper part.

Preferably the option key for rotating the treatment spot pattern is a rotatable ring. The rotatable ring is suitably located between the joystick lower part and the joystick upper part, most suitably adjacent and above the ridge.

In a yet further form the invention resides in a method of manipulating a treatment spot pattern generated by a laser in a slit lamp assembly, the method including the steps of:

manipulating a lower joystick part forwards, backwards, left or right to move the slit lamp assembly forwards, backwards, left or right respectively;

manipulating a mini joystick on an upper joystick part forwards, backwards, left or right to move the treatment spot pattern upwards, downwards, left or right respectively.

Suitably the method further includes the step of manipulating one or more option keys to provide one or more of the functions of: selecting treatment spot

pattern; cycling through available treatment spot patterns; change the size of the treatment spot pattern; change the spacing of the spots of the treatment spot pattern; change the size of the spots of the treatment spot pattern; rotate the treatment spot pattern.

The step of rotating the treatment spot pattern is most suitably performed by rotating an option key in the form of a rotatable ring.

Further features and advantages of the present invention will become apparent from the following detailed description.

## BRIEF DESCRIPTION OF THE DRAWINGS

To assist in understanding the invention and to enable a person skilled in the art to put the invention into practical effect, preferred embodiments of the invention will be described by way of example only with reference to the accompanying drawings, in which:

FIG 1 is a schematic of a slit lamp assembly with joystick controller;

FIG 2 shows the joystick in more detail;

FIG 3 shows the joystick control for micromanipulation;

FIG 4 shows joystick control for rotation;

FIG 5 demonstrates changing the spot pattern;

FIG 6 demonstrates moving the pattern

FIG 7 demonstrates rotating the pattern;

FIG 8 demonstrates enlarging the pattern; and

FIG 9 demonstrates increasing the pattern.

## DETAILED DESCRIPTION OF THE INVENTION

Embodiments of the present invention reside primarily in a control device, in the form of a joystick, which provides a range of controls for pattern laser treatments. The present invention also encompasses a method of controlling a

pattern laser using the control device. Accordingly, the elements of the control device and the method steps have been illustrated in concise schematic form in the drawings, showing only those specific details that are necessary for understanding the embodiments of the present invention, but so as not to obscure the disclosure with excessive detail that will be readily apparent to those of ordinary skill in the art having the benefit of the present description.

In this specification, adjectives such as first and second, left and right, upper and lower, and the like may be used solely to distinguish one element or action from another element or action without necessarily requiring or implying any actual such relationship or order. Words such as “comprises” or “includes” are intended to define a non-exclusive inclusion, such that a process, method, article, or apparatus that comprises a list of elements does not include only those elements but may include other elements not expressly listed, including elements that are inherent to such a process, method, article, or apparatus.

Referring to FIG 1 there is shown a schematic of a slit lamp assembly incorporating a laser device for treatment and a control device to manipulate the laser to deliver the desired treatment. The slit lamp assembly 1 includes a base 10 that supports a column 11 and illumination source 12. A laser beam from a laser source (not shown) is delivered by optical fibre 130 to a spot size control unit 13 and scanning module 14 which are located in the column 11.

The spot size control unit 13 allows the user to select the size of the laser spots. The spot size control unit 13 comprises optical elements forming a telescope.

The scanning module 14 generates the spot patterns. In one form the scanning module 14 includes two mirrors driven by galvanometers to steer the laser beam in the desired direction. One mirror drives the beam up and down, the other mirror drives the beam left and right. In addition to the galvanometer driven mirrors there may be other mirrors in the scanning module 14 to direct the beam into the chosen path. A combination of software, firmware and hardware feedback is used to control the position of the galvanometers and to synchronise the laser on and off times to achieve a pattern of laser spots and not a bunch of

lines or stripes. The software and hardware are calibrated to the optical system so that the galvanometer control will produce the actual desired geometric pattern with correct size and shape.

A user 15 looks through lens 16 and magnification module 161 to view the eye 17 of a patient. The laser beam path 131 is shown from the spot size control unit 13, through the scanning module 14 to a folding mirror 18. The folding mirror 18 combines the laser beam path 131 with the observation path 151. An objective lens 19 focusses the laser beam to a treatment zone in the eye 17 and also works with the magnification module 161 and lens 16 to provide clear vision of the treatment zone for the user 15.

A joystick 20 provides the user the functionality to adjust the laser beam at the treatment zone.

Referring to FIG 2, it can be seen that the joystick 20 has a lower part 21 and an upper part 22 separated by a ridge 23. For convenience the following description accords certain functions to the upper part and certain functions to the lower part; however persons skilled in the art will readily appreciate that there is no intrinsic limitation to which part performs which functions. The ridge 23 provides a tactile indication to the user of the delineation between the joystick lower part 21 and the joystick upper part 22.

The joystick lower part 21 provides conventional operations as shown in FIG 1. Moving the joystick backwards and forwards (arrows 201) moves the slit lamp assembly backwards and forwards (arrow 202), a side to side adjustment (arrows 203) moves the slit lamp assembly left and right (in and out of the page 204), and rotation (arrows 205) raises and lowers the slit lamp assembly (as depicted by arrows 206).

The joystick upper part 22 incorporates a number of additional functions. A mini joystick 221 located directly on top of the joystick upper part 22 is used for micromanipulation of the laser spot pattern as depicted in FIG 3. The user can manipulate this control forward, backwards, left and right relative to the main joystick 20. Manipulation of mini joystick 221 causes the micromanipulation depicted in Figure 3, where a leftward movement causes the pattern to traverse

leftwards across the target plane and a forward movement causes the pattern to traverse upward across the plane. An intermediate position will cause the pattern to move forward and leftward. Similarly, a rightward movement causes the pattern to traverse rightwards across the target plane and a backward movement causes the pattern to traverse downward across the plane.

Mini joystick 221 also incorporates a push button function, if mini joystick 221 is depressed, the pattern will return to the centre position within the field of view.

The angular orientation of the upper joystick remains fixed when the lower joystick is rotated to raise or lower the joystick. This ensures that the controls located on the upper joystick remain in the same relative orientation for the user.

In a preferred embodiment the joystick 20 is a mechanical device with direct mechanical connection to the slit lamp assembly. The mini joystick 221 is an electronic joystick in the preferred embodiment. It will be appreciated that the joystick 20 could also be an electronic joystick.

Adjacent mini joystick 221 are four option keys 222, 223, 224, 225. These keys are used to cycle through various options and are configurable. For example, keys 222 and 223 may be used to cycle through the available patterns. Some of the available patterns are shown in FIG 5 including a square of nine spots, a triangle of six spots, or a single spot. The patterns in FIG 5 are only a small selection of the possible patterns that can be generated using any number of spots. For instance, the pattern may be a filled in square as shown, a hollow square omitting the central spot, a triangle, a cross of five spots, a diamond of four spots, etc. Keys 224 and 225 may be used to change the spacing between spots in the patterns as shown in FIG 8 or increase the size of the selected pattern by adding spots as shown in FIG 9 respectively.

In another embodiment the user may pre-programme several "favourite" patterns and their respective configurations (spot spacing, size, etc.) and keys 222 and 223 can be used to cycle through these favourite patterns. This allows the user the ability to plan the surgery beforehand and "pre-select" the specific patterns and their configurations required for the surgery and then to easily,

without releasing the joystick, cycle through them when needed.

It will be appreciated that the location of the keys 222, 223, 224 and 225 on the joystick upper part 22 is purely for convenience of operation. They could also be located on the joystick lower part 21. In this embodiment (not shown) the keys would be located for convenient operation by the fingers of the user when gripping the joystick in a normal manner.

Option key 226 is in the form of a rotatable ring that rotates either clockwise or counter-clockwise to rotate the selected pattern as shown in FIG 4. When ring 226 is rotated the joystick control and all the buttons maintain their relative orientation with respect to the user. The rotation control circles the entire joystick making it accessible from any direction around the joystick; this allows the user to access the control without needing to look at it. It also allows the user to hold the joystick in whichever orientation they prefer. This rotary control only rotates a few degrees in each direction (clockwise or counter clockwise) and will return to its original position when released. In this particular design, the rotary control has two control steps in each direction, this is associated with a slow and fast rotation of the pattern on the target plane.

A small but pronounced ridge 23 sticks out below the rotary control. This ridge separates the joystick upper part 22 from the joystick lower part 21 and does not rotate. Ridge 23 provides a clear boundary between the two rotating parts and helps the user distinguish between the two controls without looking at them.

FIG 5 to FIG 9 show the various manipulations possible with the joystick shown in FIG 2. The joystick allows for selection of laser spot pattern as shown in FIG 5. The pattern may be moved as shown in FIG 6 and rotated as shown in FIG 7. The pattern may be scaled as shown in FIG 8 or enlarged as shown in FIG 9.

The laser spot pattern is generated by the scanning module 14 in conjunction with the pulse rate of the laser. As described above, the scanning module has a pair of galvanometric mirrors that are positioned to generate each spot. The mirrors are repetitively positioned to sequentially target each of the

treatment locations in the selected pattern. The position of the mirrors are controlled by signals from a processor that receives inputs from the joystick and converts the joystick inputs to specific outputs to control the mirrors. The control of galvanometric mirrors is known in the art.

As well as changing the laser spot pattern as described above with reference to Fig 4, the user can also scale the size of the spot pattern by adjusting the zoom module 132. The effect of zoom adjustment is shown in Fig 6. The pattern size may be scaled by fixed steps, such as 2x, 4x, 6x, 10x, 20x etc or may be continuously adjustable. It will be noted that both the spot size and the pattern size are scaled.

In another embodiment the invention may be applied to the pattern laser described in co-pending international application number PCT/AU2016/051228. This application describes a pattern laser comprising a plurality of laser devices each emitting a treatment laser beam into an optical fibre of an optical fibre bundle. An optical coupling module is associated with each laser device and each optical fibre for coupling a treatment laser beam into the associated optical fibre. A controller controls the operation of the laser devices by selectively turning on or off one or more of the laser devices so as to form a laser treatment pattern at an end of the fibre bundle away from the laser devices. A delivery system images the output from the fibre bundle to a treatment zone.

The specification describes that the fibre bundle may be coupled to a delivery system, such as a slit lamp assembly. The slit lamp delivery system consists of a slit lamp illuminator, a zooming module, a beam collimator, a mirror, and a focusing lens. The ophthalmologist can observe the back of the patient's eye through an eyepiece of the slit lamp microscope and the delivery of the laser pattern to a treatment zone on the retina as the laser beam is redirected by the mirror to the viewing path. The distal end of the fibre bundle is connected to the zoom module by which the spot size and spacing of the patterns can be scaled up as desired.

The invention described herein operates in the manner described in detail above to position the slit lamp assembly (using the joystick lower part) and the

pattern (using the joystick lower part). In particular, manipulation of the mini joystick manipulates the distal end of the fibre bundle to accurately position the output of the fibre bundle as desired. Most clinicians are familiar with the slit lamp so it enhances the usability of the pattern laser. The option keys are in signal connection with the controller to select treatment spot pattern, cycle through available treatment spot patterns, and rotate the treatment spot pattern, and in signal connection with the zooming module to change the size of the treatment spot pattern, change the spacing of the spots of the treatment spot pattern, and change the size of the spots of the treatment spot pattern.

It is important for a surgeon to be able to control the pattern geometry so that they can adjust the pattern to suit the treatment at hand. Some of the typical pattern adjustments include, selecting different patterns, moving the pattern across the target plane (micromanipulation of the pattern), rotating the pattern, changing the size of the pattern by adding or removing spots, and changing the spacing between adjacent spots, as described above. Currently these features are done by incorporating some secondary input device such as a mouse, track pad, touch tablet, 3D mouse or sets of buttons located on a control panel. A major drawback of these additional input devices is that they require the surgeon to release the joystick control while adjusting the pattern parameters. Due to the strong magnification of the microscope and the relative movement between the slit lamp and patient eye, the surgeon loses focus and targeting when they release the joystick and this becomes a significant interruption to the surgery. Some input devices require the surgeon to stop looking through the microscope while making the necessary adjustments which adds further disruption to the surgery.

The control device described above has the significant advantage that a user never needs to remove their hand from the joystick. All necessary functions for manipulating the slit lamp assembly and treatment spot pattern can be achieved from a single control device. This offers a significant advantage in safety and efficiency.

The above description of various embodiments of the present invention is provided for purposes of description to one of ordinary skill in the related art. It is

not intended to be exhaustive or to limit the invention to a single disclosed embodiment. As mentioned above, numerous alternatives and variations to the present invention will be apparent to those skilled in the art of the above teaching. Accordingly, while some alternative embodiments have been discussed specifically, other embodiments will be apparent or relatively easily developed by those of ordinary skill in the art. Accordingly, this invention is intended to embrace all alternatives, modifications and variations of the present invention that have been discussed herein, and other embodiments that fall within the spirit and scope of the above described invention.

CLAIMS

1. A control device for a slit lamp assembly including a laser that generates a treatment spot pattern, the control device comprising:

a joystick lower part having forwards, backwards, left and right movement that translates to forwards, backwards, left and right movement of the slit lamp assembly; and

a joystick upper part associated with the joystick lower part, the joystick upper part includinga mini joystick having forwards, backwards, left and right movement that translates to upwards, downwards, left and right movement of the treatment spot pattern at a treatment plane.

2. The control device of claim 1 wherein the joystick further includes one or more option keys providing one or more of the functions of: select treatment spot pattern; cycle through available treatment spot patterns; change the size of the treatment spot pattern; change the spacing of the spots of the treatment spot pattern; change the size of the spots of the treatment spot pattern; rotate a treatment spot pattern.

3. The control device of claim 2 wherein the one or more option keys are programmable.

4. The control device of claim 2 wherein the option keys are associated with the joystick upper part.

5. The control device of claim 1 wherein the joystick lower part and the joystick upper part are separated by a ridge.

6. The control device of claim 1 wherein the option key for rotating the treatment spot pattern is a rotatable ring.

7. The control device of claim 6 wherein the rotatable ring is located between the joystick lower part and the joystick upper part.

8. The control device of claim 6 wherein the rotatable ring is located adjacent and above a ridge that separates the joystick lower part from the joystick upper part.

9. The control device of claim 1 wherein the mini joystick is depressable to provide a further function.

10. The control device of claim 1 wherein the spot pattern is selected from one of: a square, a hollow square, a triangle, a diamond, a cross.

11. A method of manipulating a treatment spot pattern generated by a laser in a slit lamp assembly, the method including the steps of:
manipulating a lower joystick part forwards, backwards, left or right to move the slit lamp assembly forwards, backwards, left or right respectively; and
manipulating a mini joystick on an upper joystick part forwards, backwards, left or right to move the treatment spot pattern upwards, downwards, left or right respectively.

12. The method of claim 11 further including the step of manipulating one or more option keys on an upper joystick part to provide one or more of the functions of: selecting treatment spot pattern; cycling through available treatment spot patterns; change the size of the treatment spot pattern; change the spacing of the spots of the treatment spot pattern; change the size of the spots of the treatment spot pattern; rotate the treatment spot pattern.

13. The method of claim 12 wherein at least one of the one or more option keys is a rotatable ring and the step of rotating the treatment spot pattern is by manipulating the rotatable ring.

14. The method of claim 11 further including the step of returning the pattern to a centre position within a field of view by depressing the mini joystick.

15. The method of claim 11 wherein the orientation of the joystick upper part remains fixed with respect to the joystick lower part.

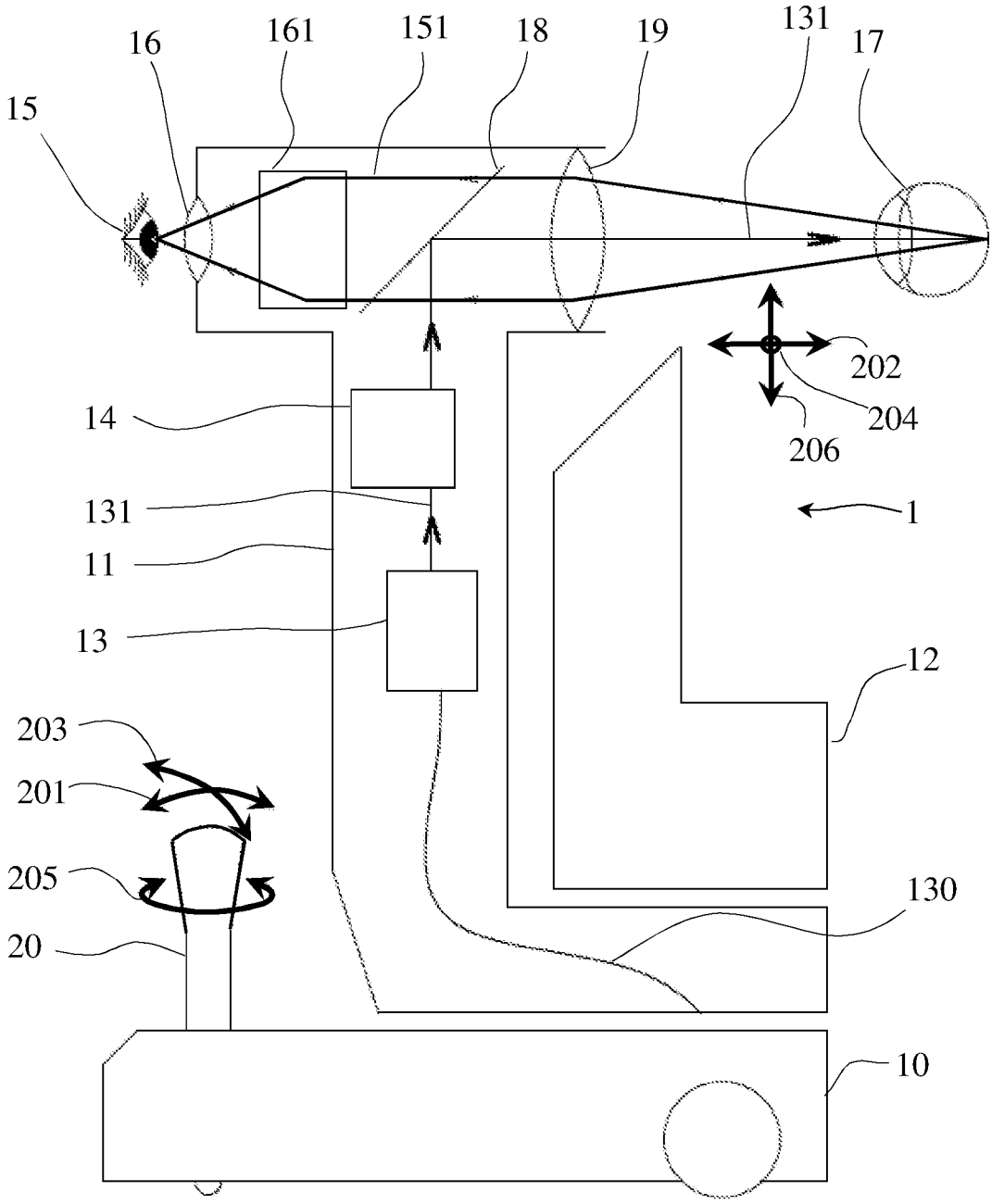
16
161
151
18
19
131
17
15
202
204
206
14
131
1
11
13
12
203
201
205
130
20
10

FIG 1

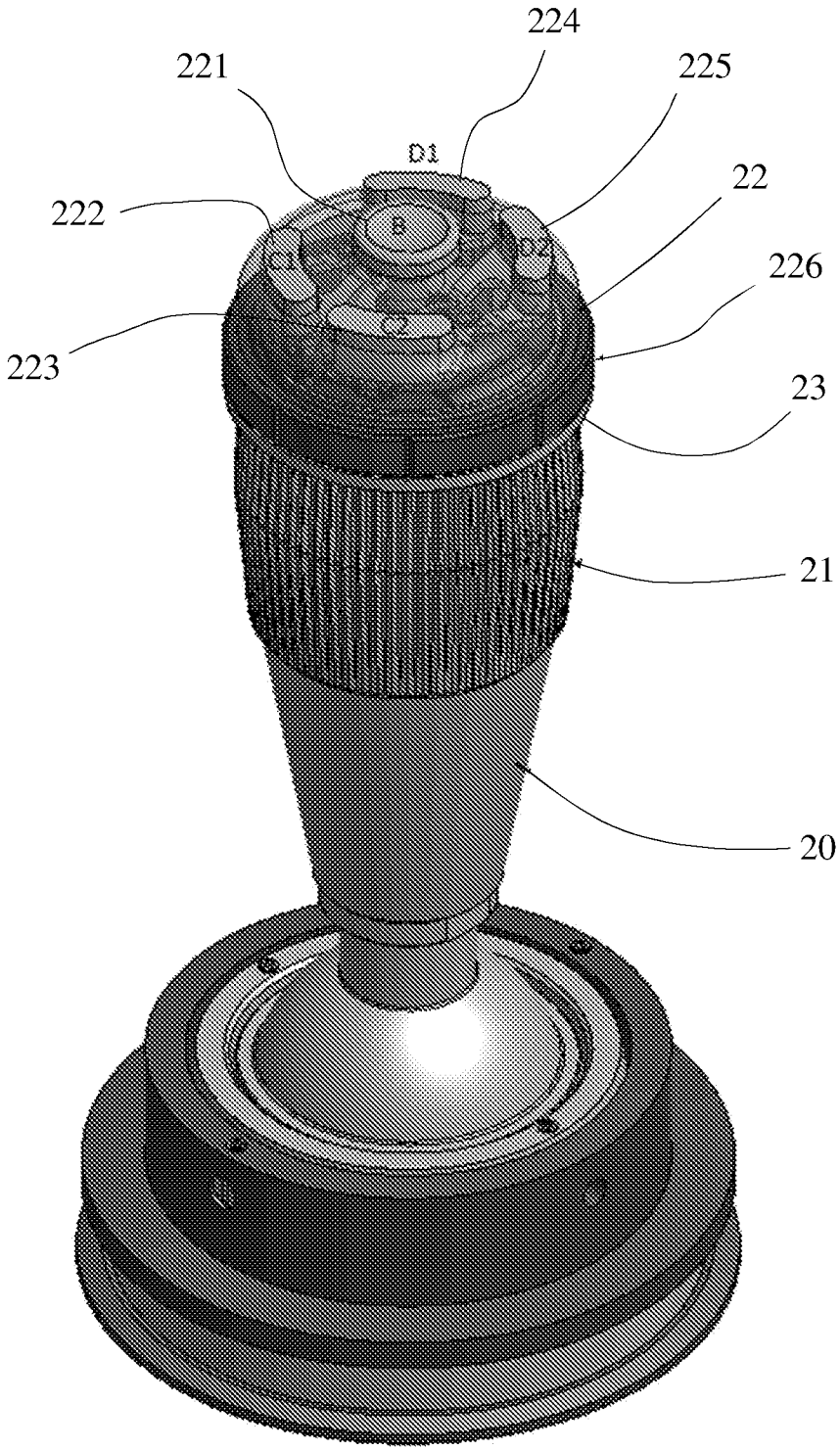


FIG 2

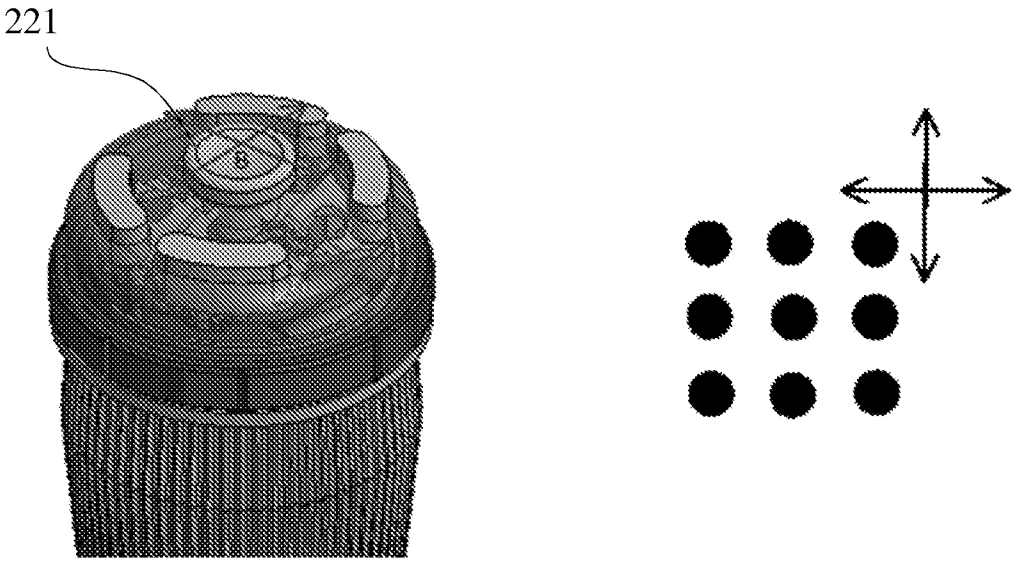


FIG 3

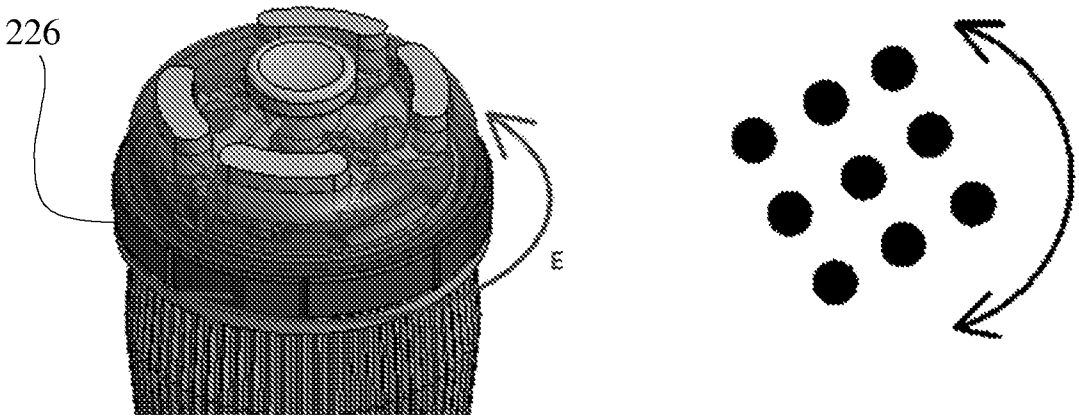


FIG 4

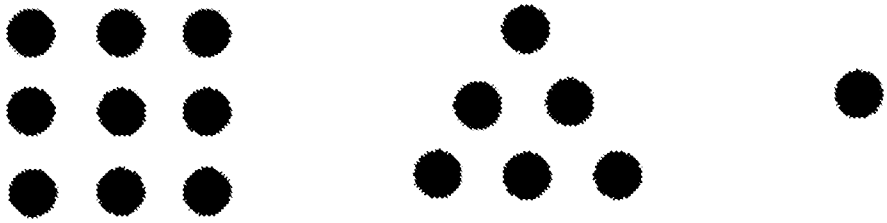

FIG 5

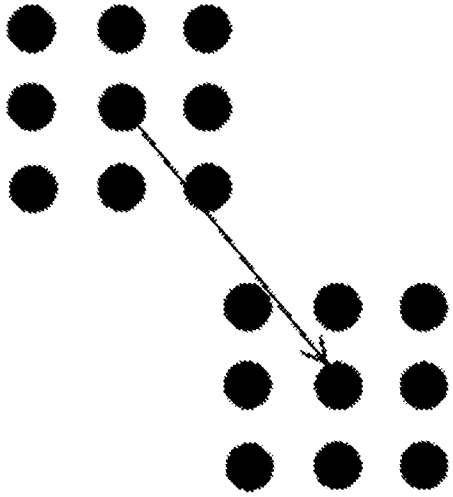

FIG 6

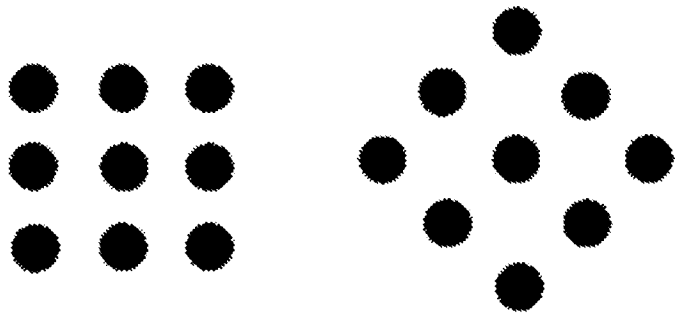

FIG 7

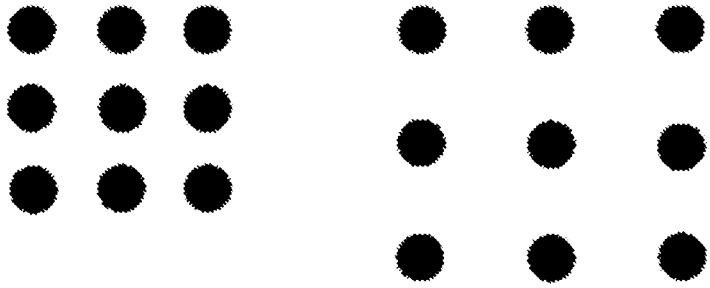

FIG 8

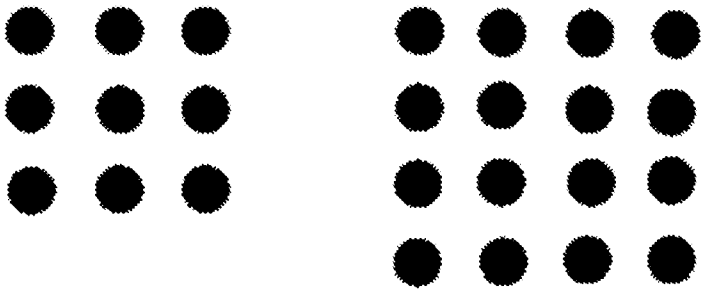

FIG 9

**INTERNATIONAL SEARCH REPORT**

International application No.
**PCT/AU2017/050143**

A. CLASSIFICATION OF SUBJECT MATTER

***A61F 9/008 (2006.01) A61B 3/135 (2006.01)***

According to International Patent Classification (IPC) or to both national classification and IPC

B. FIELDS SEARCHED

Minimum documentation searched (classification system followed by classification symbols)

Documentation searched other than minimum documentation to the extent that such documents are included in the fields searched

Electronic data base consulted during the international search (name of data base and, where practicable, search terms used)

Databases: WPIAP, EPODOC, MEDLINE, INSPEC; IPC/ CPC: A61B3, A61F9, A61B3/135, A61B3/1025,A61B3/1225, A61F2009/00863; keywords: slit lamp, joystick, laser, and like terms. Google Patents: slit lamp, joystick, ophthalmoscope, control. Google Scholar: slit lamp, joystick. Espacenet: slit lamp, joystick, control, laser

Applicant(s)/Inventor(s) name searched in internal databases provided by IP Australia.

Applicant(s)/ Inventor(s) name searched in Espacenet and Google Patents.

C. DOCUMENTS CONSIDERED TO BE RELEVANT

| Category* | Citation of document, with indication, where appropriate, of the relevant passages | Relevant to claim No. |
|---|---|---|
| | Documents are listed in the continuation of Box C | |

[X] Further documents are listed in the continuation of Box C [X] See patent family annex

* Special categories of cited documents:

"A" document defining the general state of the art which is not considered to be of particular relevance

"E" earlier application or patent but published on or after the international filing date

"L" document which may throw doubts on priority claim(s) or which is cited to establish the publication date of another citation or other special reason (as specified)

"O" document referring to an oral disclosure, use, exhibition or other means

"P" document published prior to the international filing date but later than the priority date claimed

"T" later document published after the international filing date or priority date and not in conflict with the application but cited to understand the principle or theory underlying the invention

"X" document of particular relevance; the claimed invention cannot be considered novel or cannot be considered to involve an inventive step when the document is taken alone

"Y" document of particular relevance; the claimed invention cannot be considered to involve an inventive step when the document is combined with one or more other such documents, such combination being obvious to a person skilled in the art

"&" document member of the same patent family

| Date of the actual completion of the international search | Date of mailing of the international search report |
|---|---|
| 27 April 2017 | 27 April 2017 |
| **Name and mailing address of the ISA/AU** | **Authorised officer** |
| AUSTRALIAN PATENT OFFICE<br>PO BOX 200, WODEN ACT 2606, AUSTRALIA<br>Email address: pct@ipaustralia.gov.au | Harish Ramachandran<br>AUSTRALIAN PATENT OFFICE<br>(ISO 9001 Quality Certified Service)<br>Telephone No. 0262832396 |

| INTERNATIONAL SEARCH REPORT<br>C (Continuation). DOCUMENTS CONSIDERED TO BE RELEVANT | | International application No.<br>**PCT/AU2017/050143** |
|---|---|---|
| Category* | Citation of document, with indication, where appropriate, of the relevant passages | Relevant to claim No. |
| A | US 2015/0100049 A1 (TOPCON MEDICAL LASER SYSTEMS, INC.) 09 April 2015<br>fig. 1; paragraphs [0028], [0030], [0035] | 1-15 |
| A | US 2007/0189664 A1 (ANDERSEN et al.) 16 August 2007<br>fig. 12; paragraphs [0085], [0092] | 1-15 |
| A | US 2008/0015553 A1 (ZACHARIAS) 17 January 2008<br>fig. 4; paragraph [0092] | 1-15 |
| A | US 9023017 B2 (MURAKAMI et al.) 05 May 2015<br>fig. 1; column 2 line 63, column 6, lines 33-41 | 1-15 |
| A | US 7393349 B2 (ABE et al.) 01 July 2008<br>fig. 1; column 1 lines 32-36; column 7 lines 60-66 | 1-15 |
| A | US 2007/0147730 A1 (WILTBERGER et al.) 28 June 2007<br>abstract; paragraphs [0033]-[0034], [0042], [0044], figs. 6, 11-12 | 1-15 |
| A | US 6086205 A (SVETLIZA) 11 July 2000<br>fig. 9; column 8 lines 1-7 | 1-15 |

| INTERNATIONAL SEARCH REPORT<br>Information on patent family members | International application No.<br>**PCT/AU2017/050143** |
|---|---|

This Annex lists known patent family members relating to the patent documents cited in the above-mentioned international search report. The Australian Patent Office is in no way liable for these particulars which are merely given for the purpose of information.

| **Patent Document/s Cited in Search Report** | | **Patent Family Member/s** | |
|---|---|---|---|
| **Publication Number** | **Publication Date** | **Publication Number** | **Publication Date** |
| US 2015/0100049 A1 | 09 April 2015 | US 2015100049 A1 | 09 Apr 2015 |
| | | AU 2006292130 A1 | 29 Mar 2007 |
| | | AU 2006292130 B2 | 17 Jun 2010 |
| | | CN 101553280 A | 07 Oct 2009 |
| | | EP 1926446 A2 | 04 Jun 2008 |
| | | EP 1926446 B1 | 10 Aug 2016 |
| | | JP 2009514564 A | 09 Apr 2009 |
| | | JP 5192383 B2 | 08 May 2013 |
| | | US 2007129775 A1 | 07 Jun 2007 |
| | | US 2013345683 A1 | 26 Dec 2013 |
| | | WO 2007035855 A2 | 29 Mar 2007 |
| US 2007/0189664 A1 | 16 August 2007 | US 2007189664 A1 | 16 Aug 2007 |
| | | US 7599591 B2 | 06 Oct 2009 |
| | | WO 2007082102 A2 | 19 Jul 2007 |
| US 2008/0015553 A1 | 17 January 2008 | US 2008015553 A1 | 17 Jan 2008 |
| US 9023017 B2 | 05 May 2015 | US 2008243108 A1 | 02 Oct 2008 |
| | | US 9023017 B2 | 05 May 2015 |
| | | JP 2008245833 A | 16 Oct 2008 |
| | | JP 5028124 B2 | 19 Sep 2012 |
| US 7393349 B2 | 01 July 2008 | US 2006224147 A1 | 05 Oct 2006 |
| | | US 7393349 B2 | 01 Jul 2008 |
| | | DE 102006015051 A1 | 05 Oct 2006 |
| | | JP 2006280666 A | 19 Oct 2006 |
| | | JP 4492874 B2 | 30 Jun 2010 |
| US 2007/0147730 A1 | 28 June 2007 | US 2007147730 A1 | 28 Jun 2007 |
| US 6086205 A | 11 July 2000 | US 6086205 A | 11 Jul 2000 |

**End of Annex**

Due to data integration issues this family listing may not include 10 digit Australian applications filed since May 2001.