Aug. 16, 1932. R. J. EMMERT 1,871,970

ARMATURE WINDING MACHINE

Filed Dec. 19, 1925 4 Sheets-Sheet 1

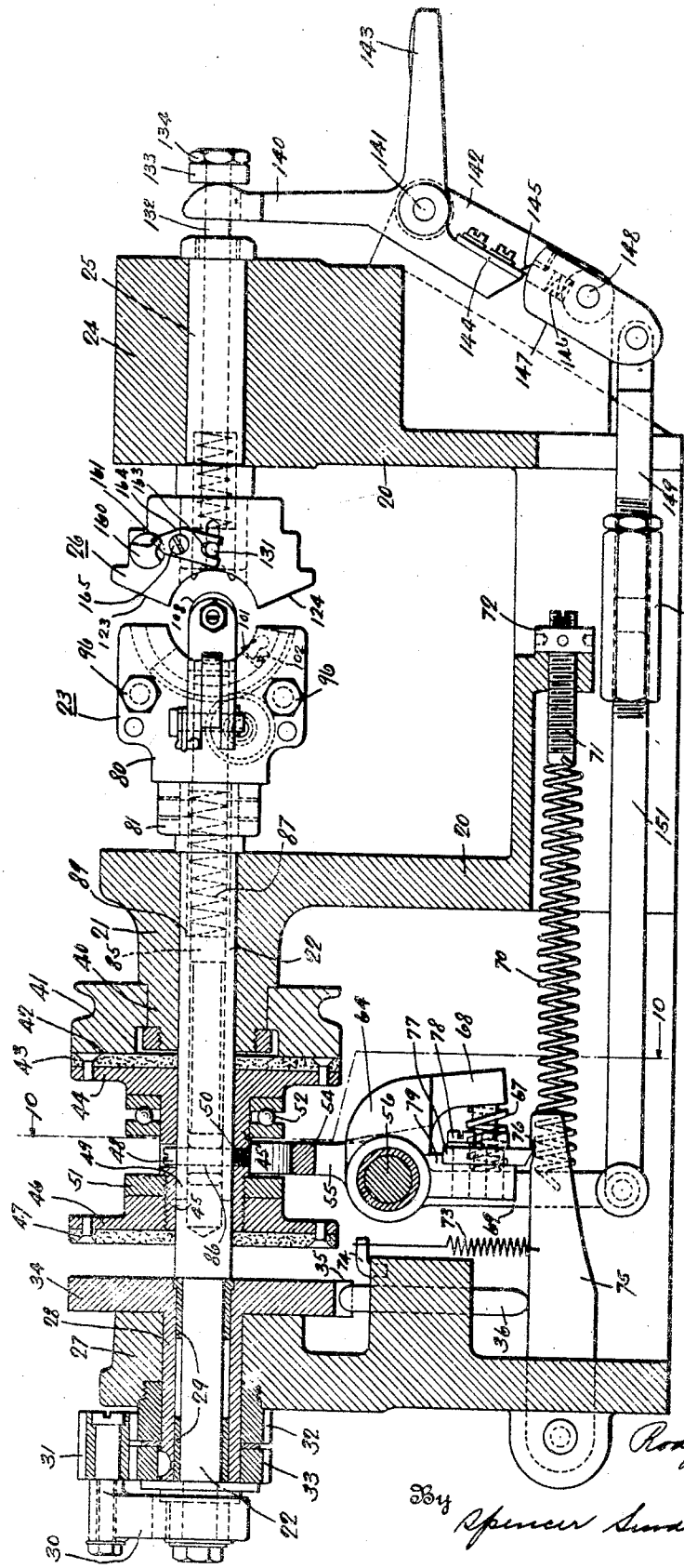

Fig. 1.

Inventor

Rodger J. Emmert

By Spencer Small & Hardman

his Attorneys

Aug. 16, 1932. R. J. EMMERT 1,871,970

ARMATURE WINDING MACHINE

Filed Dec. 19, 1925 4 Sheets-Sheet 2

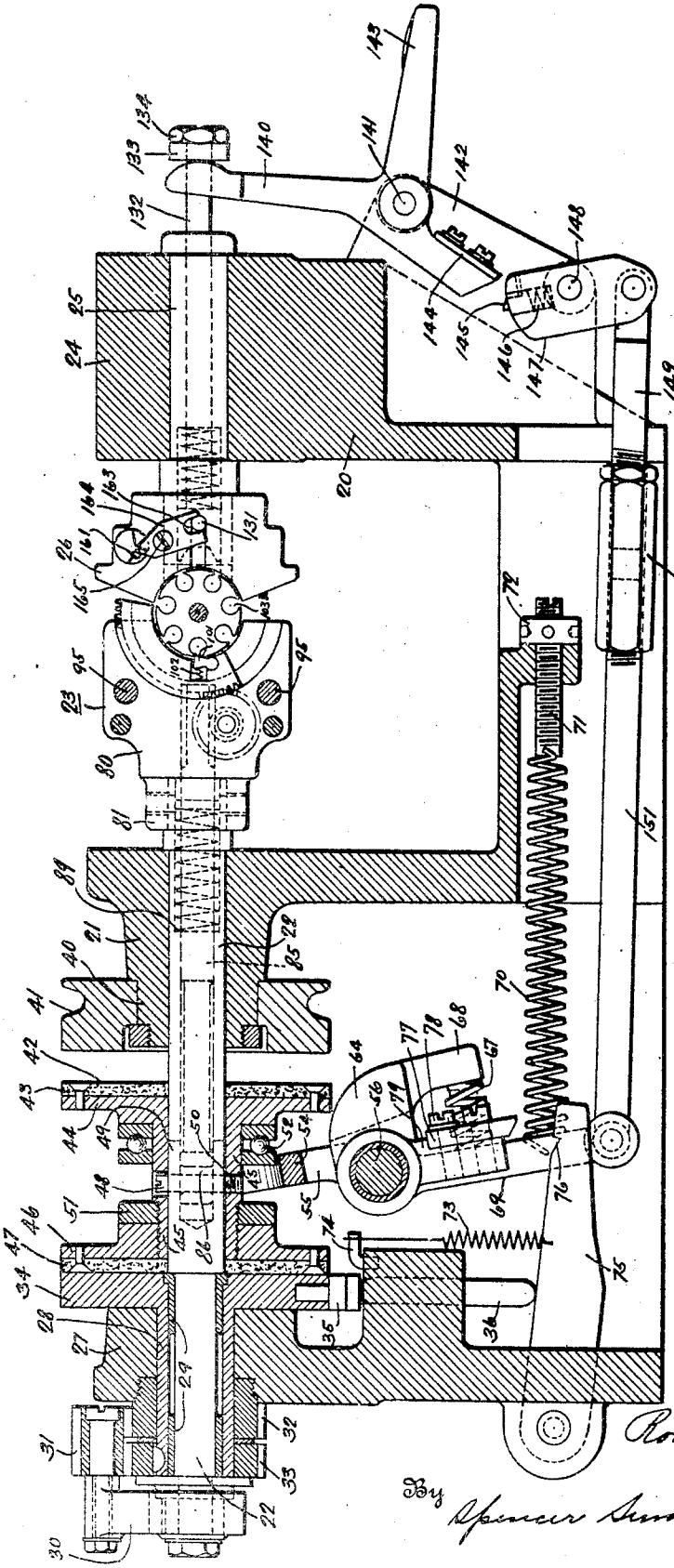

Fig. 2.

Inventor

Rodger J. Emmert

By Spencer Orrell & Hardman

his Attorneys

Aug. 16, 1932. R. J. EMMERT 1,871,970

ARMATURE WINDING MACHINE

Filed Dec. 19, 1925 4 Sheets-Sheet 3

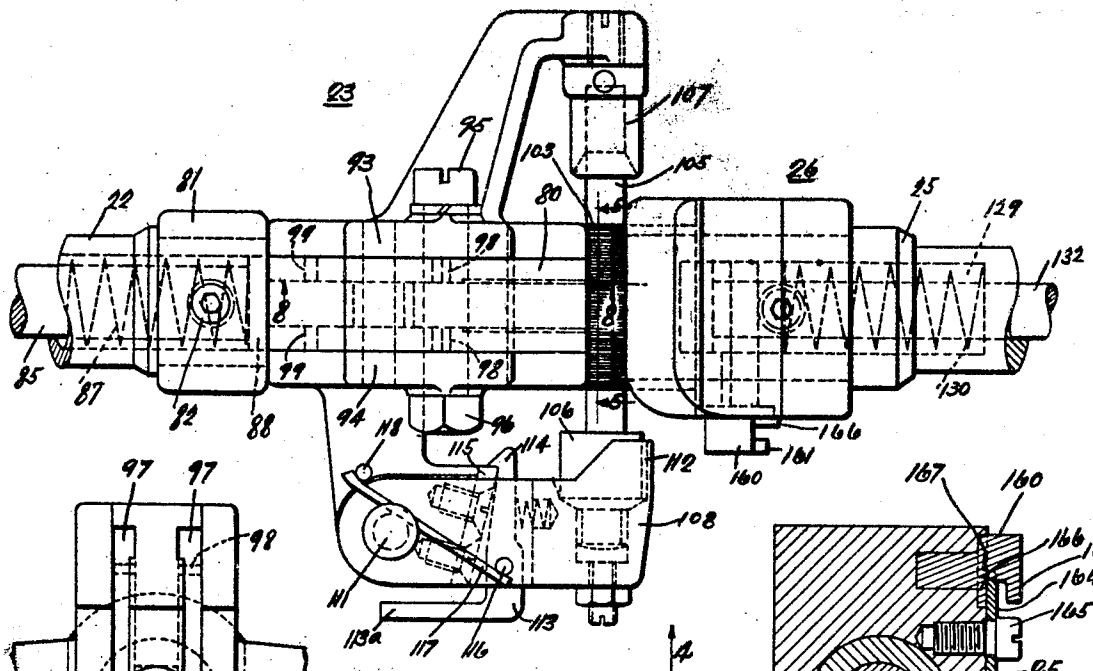

Fig. 3.

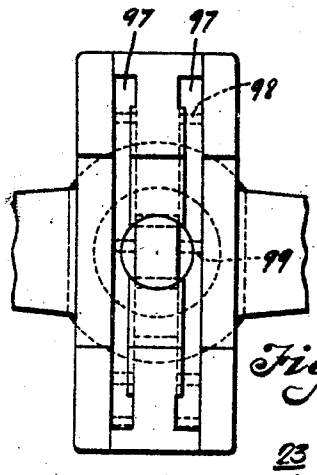

Fig. 5.

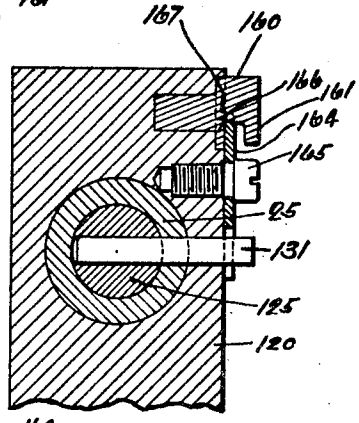

Fig. 6.

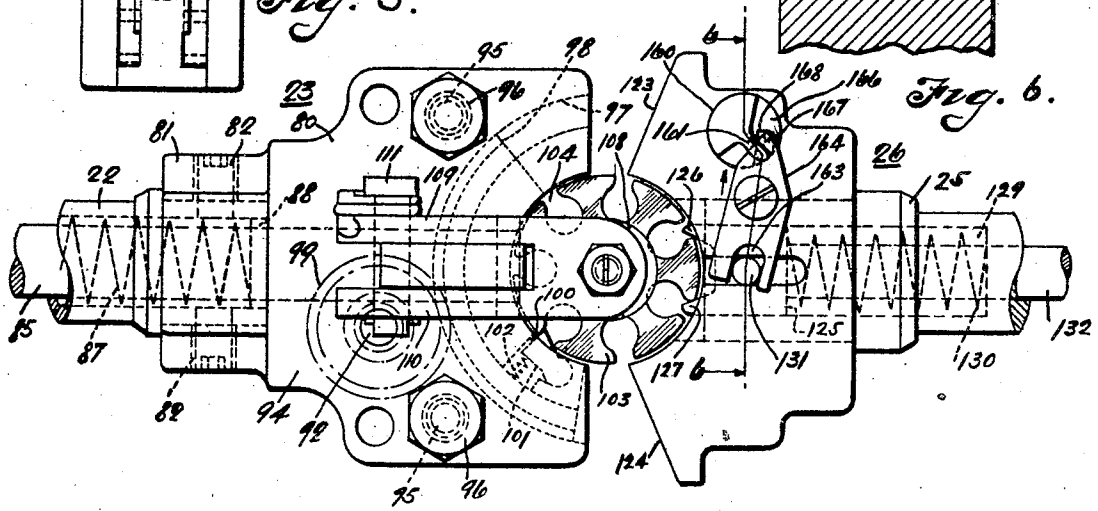

Fig. 4.

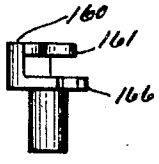

Fig. 7.

Inventor

Rodger J. Emmert

By Spencer Durall & Hardman

his Attorneys

Aug. 16, 1932. R. J. EMMERT 1,871,970

ARMATURE WINDING MACHINE

Filed Dec. 19, 1925 4 Sheets-Sheet 4

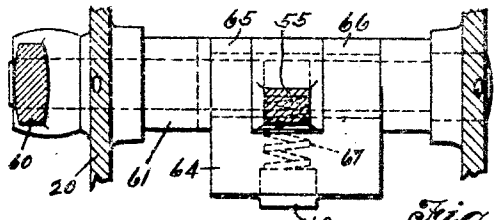

Fig. 11.

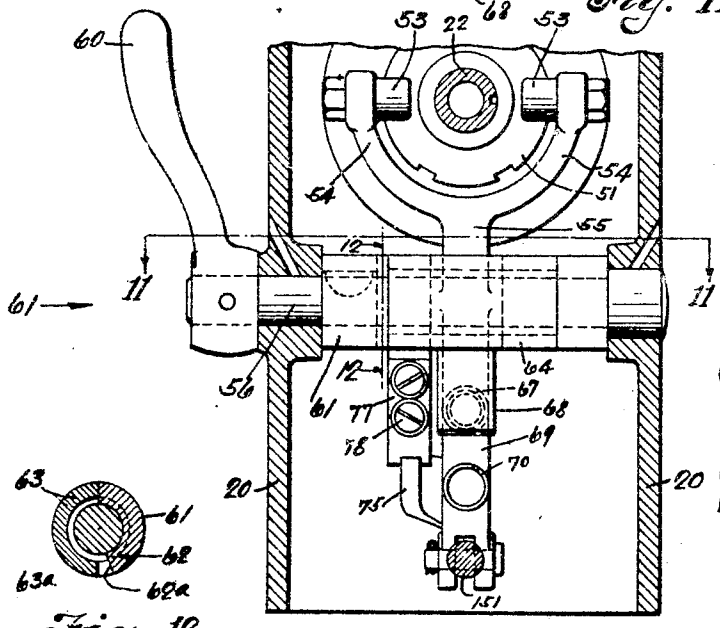

Fig. 12.

Fig. 10.

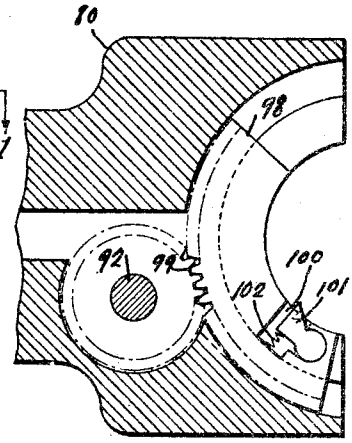

Fig. 8.

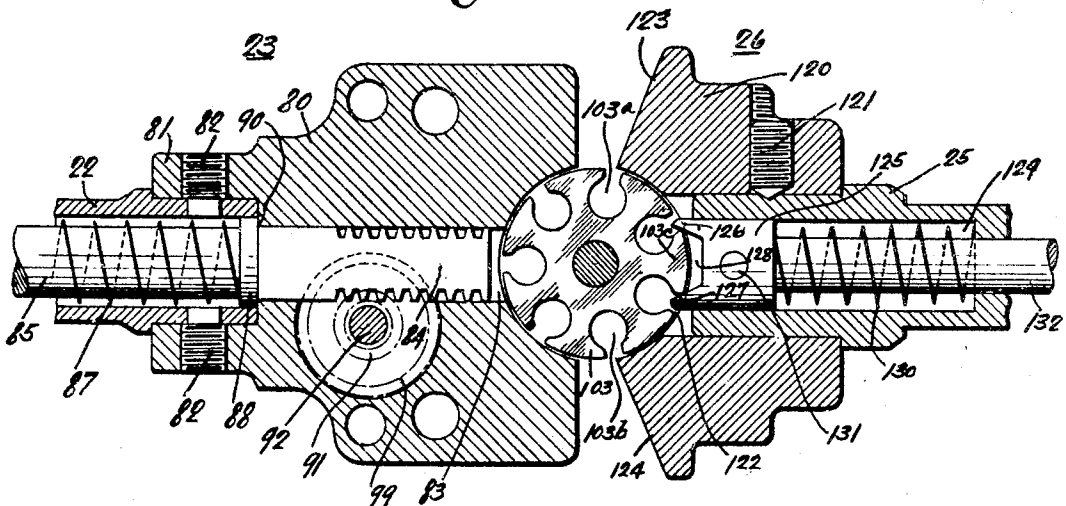

Fig. 9.

Inventor

Rodger J. Emmert

By Spencer Small & Hardman

his Attorneys

Patented Aug. 16, 1932

1,871,970

UNITED STATES PATENT OFFICE

RODGER J. EMMERT, OF ANDERSON, INDIANA, ASSIGNOR, BY MESNE ASSIGNMENTS, TO DELCO-REMY CORPORATION, OF DAYTON, OHIO, A CORPORATION OF DELAWARE

ARMATURE WINDING MACHINE

Application filed December 19, 1925. Serial No. 76,364.

This invention relates to machines for winding the armatures of dynamo-electric machines and particularly to the type of machine which includes a rotatable work carrier or winding head for supporting an armature core and shaft assemblage and for rotating the assemblage upon an axis transverse to the axis of the armature shaft. It has been the practice to provide such winding heads with means for guiding wire which is unreeled from a supply reel into certain spaced slots of the armature core. It has also been the practice to provide means for stopping the rotation of the fixture after a predetermined number of revolutions thereof from a position of rest. Such machines have been provided with a manually operated device for indexing the armature into succeeding winding positions. The winding fixtures are also provided with a movable member around which the end of the wire forming the next turn to be wound on the armature core is looped in order to provide a loop of wire between successive armature windings. The winding head usually provides a manually operated device by which this loop forming member can be moved in order that the loop of wire may be readily disengaged from the loop forming member.

It is among the objects of the present invention to provide for automatically moving or indexing the armature core into the succeeding winding positions in response to the stopping of the machine after a certain number of turns have been wound upon the armature core.

A further object is to provide the winding head of the machine with a movable member around which the wire is looped before the next winding operation is performed, and to provide mechanism for automatically moving the loop forming member into a position for releasing the loop in response to the stopping of the machine after a coil winding operation has been performed.

Further objects and advantages of the present invention will be apparent from the following description, reference being had to the accompanying drawings, wherein a preferred form of embodiment of the present invention is clearly shown.

In the drawings:

Figs. 1 and 2 are side views partly in longitudinal section of a machine constructed in accordance with the present invention, Fig. 1 showing the machine in operating position, and Fig. 2 in idle position with a portion of the winding head removed for sake of clearness.

Fig. 3 is a plan view of the winding fixture or winding head and an armature assemblage supported thereby.

Fig. 4 is a view in the direction of arrow 4 of Fig. 3.

Fig. 5 is a fragmentary view on the plan of the line 5—5 of the driving member of the winding fixture.

Fig. 6 is a fragmentary sectional view on the line 6—6 of Fig. 4 of the driven member of the winding fixture.

Fig. 7 is a side view of the loop forming member.

Fig. 8 is a fragmentary sectional view on the line 8—8 of Fig. 3.

Fig. 9 is a longitudinal sectional view of the driving and driven members comprising the winding fixture together with an armature assemblage located between the members.

Fig. 10 is a sectional view on the line 10—10 of Fig. 1.

Fig. 11 is a sectional view on the line 11—11 of Fig. 10.

Fig. 12 is a sectional view on the line 12—12 of Fig. 10.

Automatic stopping mechanism

Referring to the drawings, the machine frame 20 provides a bearing 21 for a tubular shaft 22 which carries the driving member 23 of the work carrier or winding head, and the frame 20 provides a bearing 24 and a shaft 25 which supports the driven member 26 of the winding head. The frame 20 provides also a bearing 27 for a shaft 28 provided internally with bearings 29 for supporting the shaft 22. Shaft 22 is attached to a rotatable arm 30 carrying a planetary gear 31 which meshes with a stationary gear 32 and movable gear 33

attached to the shaft 28. One of the gears 32 and 33 has one more tooth than the other gear so that each revolution of the shaft 22 will produce rotation of shaft 28 through an angular distance commensurate with the spacing of the gear teeth of the said gears. The shaft 28 carries a disc 34 provided with a plurality of spaced lugs, each for engaging a trip pin 36 for stopping the rotation of the shaft 22 after said shaft has revolved a certain number of times from a state of rest.

The frame 20 provides a bearing 40 for a grooved pulley 41 which is driven through suitable belting by a source of power such as an electric motor, not shown. The end face 42 of the pulley 41 provides a friction disc or driving element of a friction clutch, the driven element being provided by a disc 43 of friction material attached to a disc 44 which is integral with a sleeve 45 slidable endwise along the shaft 22. Sleeve 45 is threadedly engaged by disc 46 to which is attached a disc 47 of friction material which may engage the adjacent end face of the disc 34. The sleeve 45 is connected with the shaft 22 by a pin 48 which passes through a slot 49 in the shaft 22 and is rotatably connected with the sleeve 45 at 50. A nut 51 serves to maintain the disc 46 in the desired position of adjustment. The space surrounding the sleeve 45 and between the discs 44 and 46, is occupied by a thrust anti-friction bearing 52 and by pins 53 which are attached to the branches 54 of shifting lever 55 which is pivoted upon the rod 56 supported by the frame 20. If the lever 55 is moved clockwise in the position shown in Fig. 1, the clutch members 42 and 43 will be brought into engagement so that the shaft 22 will be connected with the driving pulley 41. When the lever 55 is moved counterclockwise into the position shown in Fig. 2, the shaft 22 will be disconnected from the pulley 41 and will be braked by the engagement of the friction disc 47 with the relatively stationary disc 34.

The lever 55 is moved clockwise into the position shown in Fig. 1 by an operating pedal or handle such as is indicated by numeral 60 in Fig. 10. This handle is moved clockwise looking in the direction of arrow 61 in Fig. 10, in order to move clockwise the shaft 56 and a sleeve 61 which carries a lug 62 which is less than half an annulus in shape. Movement of lug 62 in a clockwise direction will cause its surface 62*a* to engage the surface 63*a* of a semi-annular projection 63 which is carried by a yoke member 64 having branches 65 and 66 and pivotally supported by the rod 56. Motion is transmitted from the yoke member 64 to the lever 55 through a compression spring 67 which is located between an arm 68 provided by the yoke 64 and an arm 69 provided by the lever 55. A spring 70 attached to the arm 69 and to an adjusting screw 71 extending through an aperture in the frame 20 and retained by a nut 72, tends to move the lever 55 in a counterclockwise direction so that the friction members 34 and 47 will be engaged as shown in Fig. 2.

To start the machine, the lever 60 is moved clockwise as viewed in the direction of arrow 61 in Fig. 10, and is maintained in this position until the knock-out pin 36 is released by one of the lugs 35 carried by the plate 34. After the pin 36 is released, a spring 73 attached to a stationary part 74 and to a latch lever 75 will cause the latch lever 75 to be moved into the position shown in Fig. 1 in order that a latch hook 76 provided by lever 75 will be engaged by a latch plate 77 attached by screws 78 to an arm 79 of the yoke 64. When this occurs the lever 60 may be released and the latch lever 75 will maintain clutch members 43 and 42 in engagement. After a predetermined number of revolutions of the shaft 22, another lug 35 will engage the latch knock-out pin 36 in order to move the lever 75 out of engagement with the latch plate 77 as shown in Fig. 2. The spring 70 will be released to move the lever 55 counterclockwise so that the braking members 34 and 47 will be engaged and so that the shaft 22 will be stopped. The movement of the lever 55 and of pin 48 is used to operate mechanism for automatically indexing the armature core into the next position for winding.

Winding fixture and automatic indexing mechanism

The driving member 23 of the work support or winding head comprises a block 80 having a cylindrical hub 81 which is centrally apertured to receive an end of the tubular shaft 22. Screws 82 secure the hub 81 to the shaft 22. The block 80 is provided with a central aperture 83 for receiving a rack 84 provided by a rod 85 which is slidable endwise within the shaft 22 and is provided with a slotted opening 86 for receiving the pin 48. A spring 87 located between a shoulder 88 provided by the rod 85 and a shoulder 89 provided by the shaft 22, tends to urge the rod 85 toward the right as viewed in Fig. 9 so that the shoulder 88 will normally engage a shoulder 90 provided by the recess in the hub 81 of block 80. The rack 84 meshes with a gear 91 attached to a shaft 92, the ends of which are supported by brackets 93 and 94 which are attached by bolts 95 and nuts 96 to the block 80. Block 80 is provided with arcuate grooves 97 for receiving and guiding arcuate racks 98 which mesh with gears 99 which are attached to the shaft 92 as clearly shown in Fig. 8.

Each arcuate rack 98 is provided with a recess 100 for receiving an indexing dog 101 which is pivotally supported by the rack and

is yieldingly urged into the position shown in Figs. 4 and 8 by a spring 102. In this position the dog 101 is received by one of the core slots of an armature core 103 which is received by a semi-cylindrical recess 104 provided between block 80 and the brackets 93 and 94. The core 103 is assembled with an armature shaft 105 and a commutator 106. The bracket 93 supports a tubular member 107 for receiving one end of the shaft 105 and the other end of the shaft is supported by a bracket 108 having spaced arms 109 and 110 which are hingedly connected with the bracket 94 by a pin 111. The bracket 108 is provided with a recess 112 for receiving the commutator 106 and the end of the shaft 105 which projects from the commutator. The bracket 108 is maintained in the position shown in Fig. 3 by the latch lever 113 having a hook 114 for engaging a latch plate 115 which is attached to the bracket 94. The latch lever 113 is pivotally supported by a rod 116 carried by the bracket 108, and the rod 116 is received by one end of a spring 117 which is coiled around the pin 111 and bears at the other end against a pin 118 carried by the bracket 94. Thus the spring 117 tends to urge the bracket 108 into the position shown in Fig. 3. In order to remove the armature assemblage from the winding head the lever arm 113*a* is pressed toward the winding head so that the bracket 108 may be pulled away from the bracket 94 as viewed in Fig. 3. Then the armature assemblage may be removed endwise from the winding head and another one may be replaced, after which bracket 108 is released and is returned automatically into the position shown in Fig. 3.

The driven member 26 of the work holder or winding head comprises a block 120 attached by a set screw 121 to the shaft 25. The block 120 is provided with a semi-cylindrical recess 122 for receiving the armature core 103 and is provided with wire guiding and camming surfaces 123 and 124 for guiding wire into certain spaced core slots adjacent the surfaces 123 and 124, such as slots 103*a* and 103*b*, respectively. The core is retained in its desired position for winding by a retaining dog 125 having prongs 126 and 127 which are received by certain slots of the armature core. These prongs define a notch 128 for receiving a tooth such as tooth 103*c* of the armature core. The dog 125 is slidable within a recess 129 provided by the shaft 25 and is maintained in engagement with the core by a spring 130. The dog 125 is attached by pin 131 to a rod 132 which extends through the shaft 25 and is connected with a screw-threaded collar 133 which may be secured in the desired position of adjustment relative to the rod 132 by lock nut 134. The collar 133 is engaged by a forked lever 140 which is pivoted upon a rod 141 carried by a bracket 142 provided by the frame 20. The lever 140 is provided with an operating handle 143 and with a latch plate 144 which is engaged by latch plunger 145 slidable within a recess 146 provided by a lever 147 which is mounted upon a fulcrum pin 148 carried by the bracket 142. The lever 147 is connected with the lever arm 69 by a rod 149, a turn buckle 150 and a rod 151.

As previously explained the disengagement of the clutch member 43 from the clutch member 42 and the engagement of the brake member 47 with the brake member 34 is effected by the engagement of the lug 35 with the knock-out pin 36 which occurs after the shaft 22 has made a certain number of revolutions. The disengagement of the clutch and the applying of the brake is attended by the movement of the lever arm 69 from the position shown in Fig. 1 to that shown in Fig. 2 and likewise the movement of the pin 48 toward the left from the position shown in Fig. 1 to the position shown in Fig. 2. The movement of the lever arm 69 toward the right into the position shown in Fig. 2 causes counterclockwise rotation of the lever 147, clockwise rotation of the lever 140 and movement of the rod 132 toward the right from the position shown in Fig. 1 to that shown in Fig. 2. This movement of the rod 132 causes the prongs 126 and 127 to be retracted from the armature core so that it may be rotated clockwise by an indexing mechanism which is operated by movement of the pin 48. When the pin 48 moves toward the left into the position shown in Fig. 2 counterclockwise rotation of the gears 91 and 99 is produced due to the engagement of the pin 48 with the rod 85, and the rack 84 with the gear 91. This causes the segments 98 to be moved from the position shown in Figs. 1 and 8 to that shown in Fig. 2. During this movement of the segments 98, the dog 101 engages the core 103 to move the latter through an angular distance equal to the angular spacing of the core teeth. After the core has been moved in this manner, the latch plate 144 being released from the latch plunger 145 as shown in Fig. 2, the rod 132 is returned by the spring 130 to the position shown in Figs. 1 and 9 so that the prongs 126 and 127 will enter certain slots of the armature core to retain the core in the position into which it has been indexed by the movement of the dog 101 just described.

The starting of the machine by the movement of the lever 60 causes the rod 85 to be restored to the position shown in Figs. 1 and 4. Hence the segment 98 and the dog 101 will be returned to the position shown in Figs. 1, 4 and 8 in which the dog will be received by a notch of the armature core and will be located projerly for the next indexing operation.

The movement of the handle 60 to start the

rotation of the shaft 22 causes the lever 69 to move clockwise from the position shown in Fig. 2 to that shown in Fig. 1 thereby causing the lever 147 to be restored to the position shown in Fig. 1. Since the lever 140 is already in the position shown in Fig. 1 before the lever 147 has been moved into its position shown therein, the spring 146 yields to allow the latch plunger 145 to be cammed inwardly by the engagement with the latch plate 144 until the plunger clears the plate, whereupon the plunger will be permitted to move into the position shown in Fig. 1.

Loop forming device

The driven member 26 of the winding head carries a rotatable shaft 160 provided with a hook 161 around which the wire, which joins the supply reel of wire with the last turn to be wound upon the armature core, is looped before the next armature coil is wound upon the core. The shaft 160 is moved clockwise from the position shown in Fig. 1 to that shown in Fig. 2 in response to the stopping of the machine in order that the loop will be automatically released from the hook 161 at the end of each coil winding operation. This is accomplished by mechanism including the pin 131 which is attached to the dog 125 and extends through notches provided in the shaft 25 and in the block 120. The pin 131 is received by a notch 163 provided in a lever 164 which is pivotally mounted upon a screw 165 threaded into the block 120. The lever 164 engages a flange 166 of the shaft 160 in order to retain the shaft 160 into the position shown in Fig. 6. The lever 164 is provided with a finger 167 bent from the plane of the main portion of the lever inwardly toward the block 120 as viewed in Fig. 6. This finger is received by a notch 168 provided by the flange 166 of the shaft 160. It is therefore apparent that when the rod 132 is moved toward the right from the position shown in Fig. 1 to that shown in Fig. 2 the pin 131 will cause the lever 164 to be rotated counterclockwise; and the engagement of the finger 167 with the left hand side of the notch 168 as viewed in Fig. 4 will cause the shaft 160 to be moved clockwise from the position shown in Figs. 1 and 4 to that shown in Fig. 2. A loop of wire which has been wound around the hook 161 will therefore be released during the indexing of the core in a clockwise direction of rotation. Since the portions of the core which are on the right hand side of a vertical plane coincident with the axis of the core will move downwardly during the indexing of the core, it is apparent that any loop connecting the core with the hook 161 will be moved away from the hook automatically during the indexing of the core into the next winding position. As soon as the latch plate 144 is relieved from engagement by the latch plunger 145, the rod 132 will be restored to the position shown in Fig. 1 and hence the shaft 160 will be rotated counterclockwise from the position shown in Fig. 2 to the position shown in Fig. 1. Thus the hook 161 is restored to the position for receiving the wire connecting the supply reel of wire with the last turn to be wound upon the armature core.

It will be noted that the lever 143 can be moved clockwise independent of the lever 147. This feature is included in the present invention as it is desirable to retract the dog 125 when the completely wound armature is being removed from the winding head and an empty core is substituted.

The manipulation of the present machine is exceedingly simple. In placing the work in the machine the operator has only to press the latch lever 113*a* in order to release the bracket 108. Movement of the bracket 108 away from the winding head allows the armature core and shaft assembly to be placed in position. Then the bracket 108 is released and is permitted to support one end of the armature shaft. The end of the wire leading from the supply reel is wound around the hook 161 and then the machine is started into operation by movement of the lever 60. The machine stops automatically and indexes the core into the next winding position and also releases the end of the wire from the hook 161. Before winding each succeeding coil, the wire leading from the last turn to be wound on is looped around the hook before the lever 60 is moved to start the machine into operation again. After each succeeding coil is wound the machine stops automatically, indexes the core into the next winding position and releases the loop previously formed from the hook 161. It is therefore apparent that since the manual operations of indexing and loop releasing have been eliminated, that the time of winding an armature has been substantially reduced thereby decreasing the cost of manufacturing the armature.

While the form of embodiment of the present invention as herein disclosed, constitutes a preferred form, it is to be understood that other forms might be adopted, all coming within the scope of the claims which follow.

What is claimed is as follows:

1. An armature winding machine comprising in combination, a rotatable winding head for supporting an armature core with the core axis transverse to the axis of rotation of the winding head, means for rotating the winding head, a movable member carried by the head for receiving a loop of wire connecting successive armature coils, and means driven by the winding head rotating means for moving the member automatically to release the wire therefrom after a certain number of revolutions of the winding head.

2. An armature winding machine comprising in combination, a rotatable winding head

for supporting an armature core with the core axis transverse to the axis of rotation of the winding head, means for rotating the winding head, a movable member carried by the head for receiving a loop of wire connecting successive armature coils, and means under the control of winding head rotating means for automatically stopping the winding head after a certain number of revolutions and for moving said loop receiving member to release the wire loop.

3. An armature winding machine comprising in combination, a rotatable winding head for supporting an armature core with the core axis transverse to the axis of rotation of the winding head, means for rotating the winding head, mechanism for rotating the core to index the core into successive winding positions, a locating member for normally maintaining the core in a desired location relative to the winding head, a movable member carried by the head for receiving a loop of wire connecting successive armature coils, and means under the control of the winding head rotating means for automatically stopping the winding head after a certain number of revolutions and for retracting the locating member and for operating the indexed mechanism and for moving said loop receiving member to release the wire therefrom.

4. An armature winding machine comprising in combination, a rotatable winding head for supporting an armature core with the core axis transverse to the axis of rotation of the winding head, means for rotating the winding head, mechanism for rotating the core to index the core into successive winding positions, a locating member for normally maintaining the core in a desired location relative to the winding head, a movable member carried by the head for receiving a loop of wire connecting successive armature coils, and means under the control of the winding head rotating means for automatically stopping the winding head after a certain number of revolutions and for retracting the locating member and for moving said loop receiving member to release the loop.

5. An armature winding machine comprising in combination, a rotatable winding head for supporting an armature core with the core axis transverse to the axis of rotation of the winding head, means for rotating the winding head, mechanism for rotating the core to index the core into successive winding positions, a locating member for normally maintaining the core in a desired location relative to the winding head, a movable member carried by the head for receiving a loop of wire connecting successive armature coils, and means under the control of the winding head rotating means for automatically retracting the locating member and for moving said loop receiving member to release the loop after a certain number of revolutions of the winding head.

6. An armature winding machine comprising in combination, a rotatable winding head for supporting an armature core with the core axis transverse to the axis of rotation of the winding head, means for rotating the winding head, a movable member carried by the head for receiving a loop of wire, and means under the control of the winding head rotating means for automatically stopping the winding head after a certain number of revolutions and for moving said loop receiving member to release the wire therefrom.

7. An armature winding machine comprising, in combination, a rotatable winding head for supporting an armature core with its axis transverse to the axis of rotation of the head, a tubular shaft supporting the head, and means for indexing the core including a dog spring actuated into a core slot for engaging a core tooth, a rod slidable endwise within the shaft, and mechanism connecting the dog and rod, in which the mechanism connecting the dog and rod comprises a straight rack provided by the rod, a circular rack carrying the dog, and gears connecting the racks.

8. An armature winding machine comprising, in combination, a rotatable winding head for supporting an armature core with its axis transverse to the axis of rotation of the head, a tubular shaft supporting the head, a hook rotatably supported by the winding head and adapted to receive a loop of wire for connecting successive armature coils, and mechanism for moving the hook including a rod movable endwise within said shaft.

9. The machine defined by claim 8 having a lever mounted upon the winding head and provided with an arm for engaging and rotating the hook and with a recessed arm for receiving a pin connected with the endwise movable rod.

10. An armature winding machine comprising in combination, a rotatable winding head for supporting an armature core with its axis transverse to the axis of rotation of the head, two aligned tubular shafts supporting the head between them, core indexing and locating devices carried by the head, a power operated driving clutch member, a companion driven clutch member connected with one of the shafts, one of the clutch members being axially movable relative to the other, two rods each slidable endwise within a tubular shaft and operatively connected with the indexing device and the locating device respectively, means for moving the movable clutch member, and mechanisms for connecting the rods with the movable clutch member so that the locating device will be retracted from the core and the core will be advanced to the next winding position when the clutch members are separated, and

so that the indexing device will be returned to position for the next indexing operation as the clutch members are brought together.

11. An armature winding machine comprising, in combination, a rotatable winding head for supporting an armature core with the core axis transverse to the axis of rotation of the winding head, a driving member, means shiftable into one position for operatively connecting the winding head with the driving member, and means operated by the moving of the shiftable means into another position for rotating the core in the winding head to index said core into the next adjacent winding position.

12. An armature winding machine comprising, in combination, a rotatable winding head for supporting an armature core with the core axis transverse to the axis of rotation of the winding head, a drive shaft upon which the winding is secured, a driving member, means shiftable into one position for operatively connecting the drive shaft with the driving member, means adapted to shift the aforementioned means into another position to disconnect the drive shaft from the driving member after the winding head has been rotated a predetermined number of revolutions, and means operated by the movement of the shiftable means to said disconnecting position, for rotating the armature core in the winding head to index said core into the next adjacent winding position.

13. An armature winding machine comprising, in combination, a rotatable winding head for supporting an armature core with the core axis transverse to the axis of rotation of the winding head, a tubular drive shaft upon which the winding head is secured, a power source, connecting means slidably supported on the tubular shaft and shiftable into one position operatively to connect the said shaft and power source, and means within said tubular shaft and controlled by the operation of the slidably supported means, for rotating the core in the winding head to index said core into the next adjacent winding position.

14. An armature winding machine comprising, in combination, a rotatable winding head for supporting an armature core with the core axis transverse to the axis of rotation of the winding head, a tubular drive shaft upon which the winding head is mounted, a power driven member, a clutch slidably supported upon the tubular shaft, a pin carried by the clutch and connecting the clutch with the shaft so that the clutch is adapted to rotate the shaft, means for moving the clutch longitudinally of the shaft, into engagement with the power driven member, and means within said tubular shaft and extending through the winding head, one end of said means being connected to the pin, the other end having operative connections with the armature core in the winding head, whereby said core is rotated in said head to index said core into the next adjacent winding position when the clutch is moved out of engagement with the driving member.

15. An armature winding machine comprising, in combination, a frame, tubular shafts journalled in said frame so as to be coaxial, a rotatable winding head comprising a driving portion secured to one tubular shaft and a driven portion secured to the other tubular shaft and between which portions an armature core is adapted to be supported with its axis transverse to the axis of rotation of the winding head, a driving member, a clutch drivingly supported on the one tubular shaft and movable longitudinally thereof, shifting means adapted to move the clutch into and out of engagement with the driving means, means in the one tubular shaft for locking the armature core in the winding head when it is being rotated, means connected with the shifting means for disconnecting the locking means from the armature core when said shifting means moves the clutch out of engagement with the driving member, and means in the other tubular shaft for engaging the armature core to rotate it in the winding head to index said core into the next adjacent winding position after the shifting means has disengaged the clutch from the driving member and the locking means from the armature core.

16. An armature winding machine comprising, in combination, a rotatable winding head for supporting an armature core with its axis transverse to the axis of rotation of the head, two aligned tubular shafts supporting the head between them, core indexing and locating devices carried by the head, a power operated driving clutch member, a companion driven clutch member connected with one of the shafts, one of the clutch members being axially movable relative to the other, two rods each slidable endwise within a tubular shaft and operatively connected with the indexing device and the locating device respectively, means for moving the movable clutch member, and mechanisms for connecting the rods with the movable clutch member so that the locating device will be retracted from the core and the core will be advanced to the next winding position when the clutch members are separated, and so that the indexing device will be returned to position for the next indexing operation as the clutch members are brought together, means for shifting the movable clutch member into operative engagement with the companion clutch member, a latch for locking said means in the clutch engaging position, means driven by the one tubular shaft for unlatching the clutch shifting means after the winding head has been rotated a predetermined number of revolutions, and means con-

nected to said shifting means and adapted automatically to move said means for separating the clutch members and operating the indexing and locating devices respectively.

In testimony whereof I hereto affix my signature.

RODGER J. EMMERT.