US 20140284294A1

(19) **United States**

(12) **Patent Application Publication**

(10) **Pub. No.: US 2014/0284294 A1**

(43) **Pub. Date: Sep. 25, 2014**

Taylor

(54) **SHELVING SUPPORT BRACKET FOR A STORAGE RACK**

(71) Applicant: **Silverack, LLC**, Brea, CA (US)

(72) Inventor: **Harry R. Taylor**, Whittier, CA (US)

(73) Assignee: **Silverack, LLC**, Brea, CA (US)

(21) Appl. No.: **14/223,297**

(22) Filed: **Mar. 24, 2014**

Related U.S. Application Data

(60) Provisional application No. 61/804,612, filed on Mar. 22, 2013, provisional application No. 61/804,599, filed on Mar. 22, 2013.

Publication Classification

(51) **Int. Cl.**

A47B 45/00	(2006.01)
A47B 96/06	(2006.01)

(52) **U.S. Cl.**

CPC ***A47B 45/00*** (2013.01); ***A47B 96/06*** (2013.01)

USPC **211/134**; 248/218.4

(57) **ABSTRACT**

A support bracket configured to be detachably connected to a vertical support post of a shelving unit and a crossbeam extending between two shelving units is provided. In one embodiment, the support bracket includes a first body portion having a front surface and a rear surface, a second body portion having a front surface and a rear surface, at least one interlocking member extending rearward from the rear surface of the first body portion, the at least one interlocking member configured to detachably engage at least one of a plurality of openings in the vertical support member, and at least one aperture in the second body portion, the at least one aperture configured to detachably receive at least one interlocking member on the crossbeam.

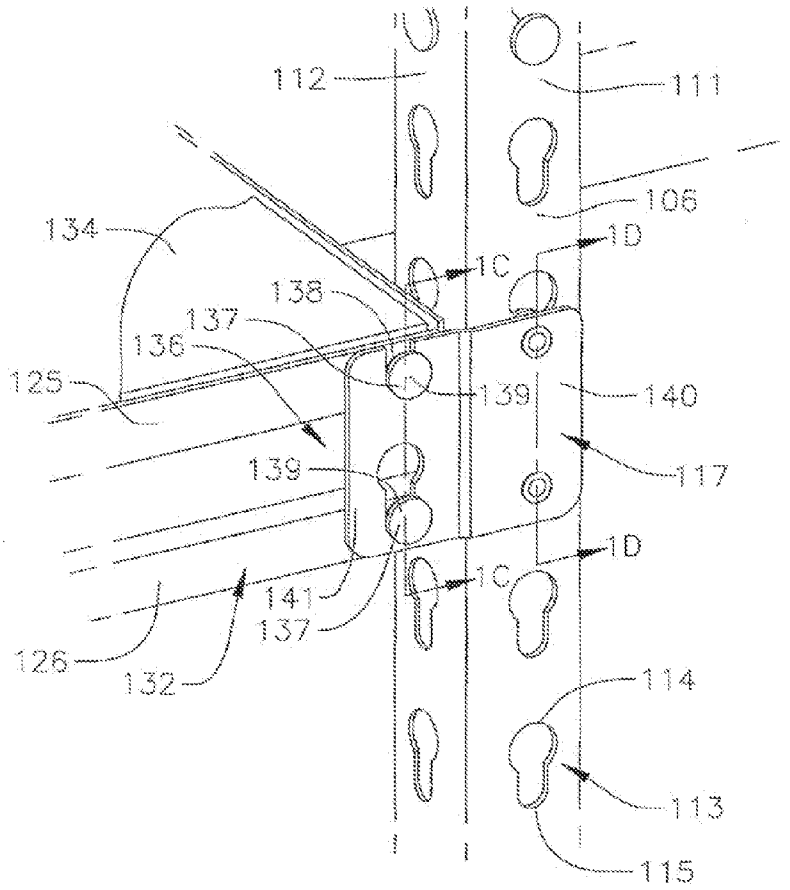

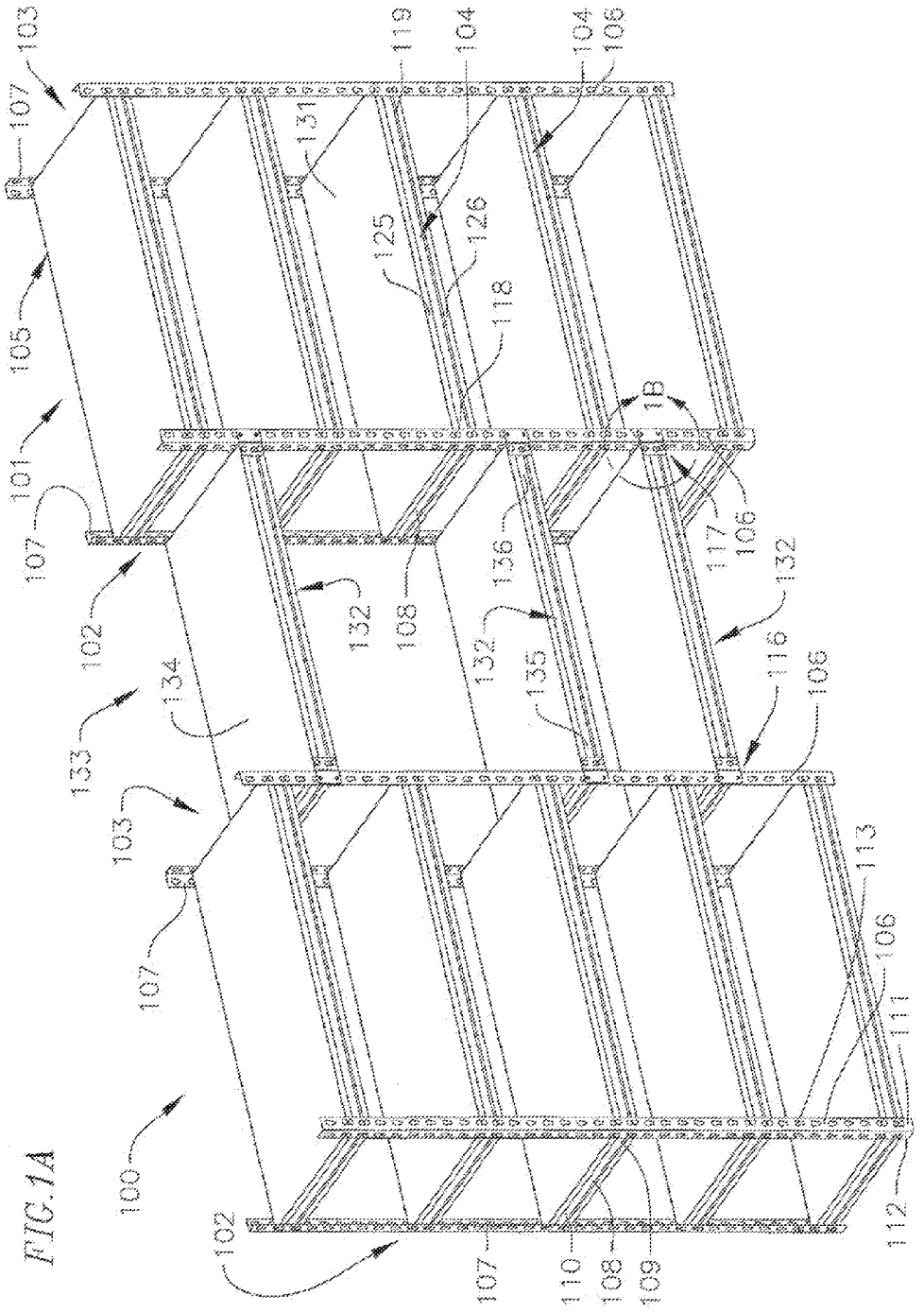
100
101
102
103
104
105
106
107
108
109
110
111
112
113
116
117
118
119
125
126
131
132
133
134
135
136
1B

FIG.1A

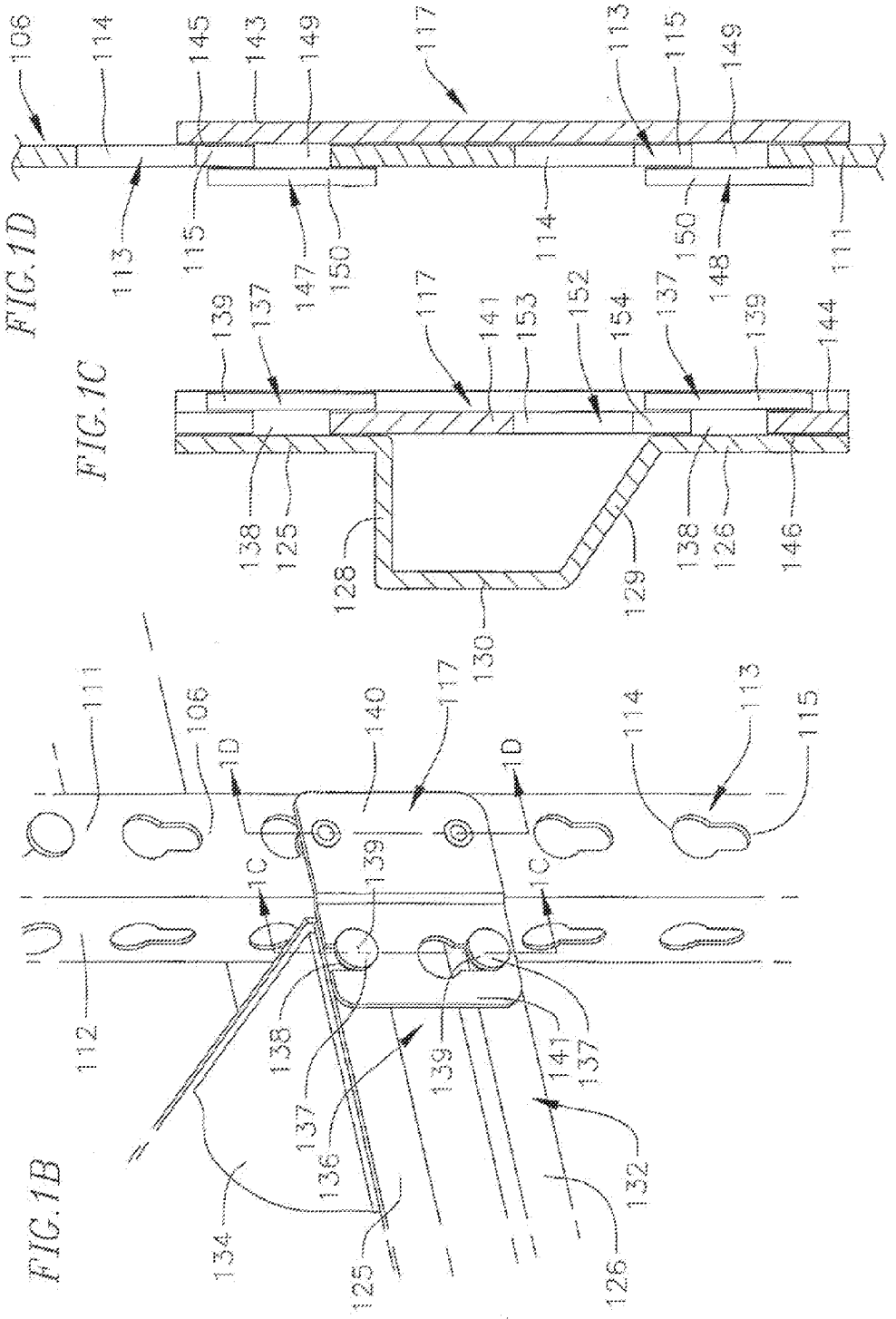
106
114
145
143
149
117
113
115
149
113
115
147
150
114
150
148
111
FIG.1D
139
137
117
141
153
152
154
137
139
144
138
125
128
129
138
126
146
130
FIG.1C
111
106
1D
140
117
1D
114
113
115
1C
139
1C
112
138
137
136
134
125
139
141
137
132
126
FIG.1B

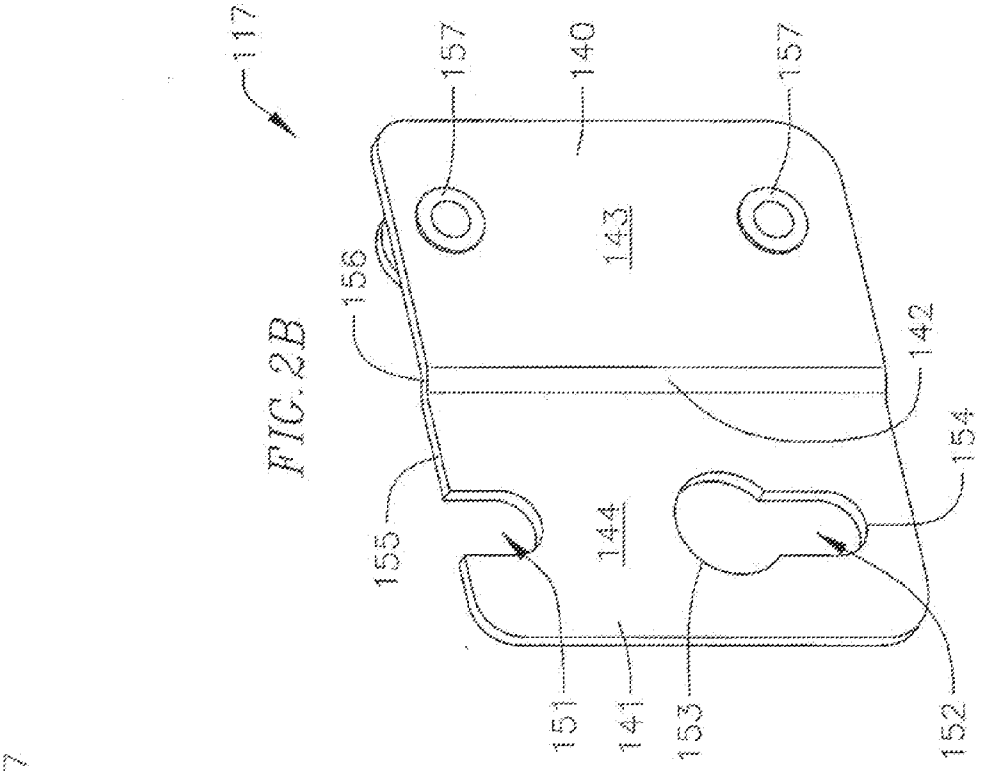
117
157
140
157
143
156
142
154
155
144
151
141
153
152

FIG. 2B

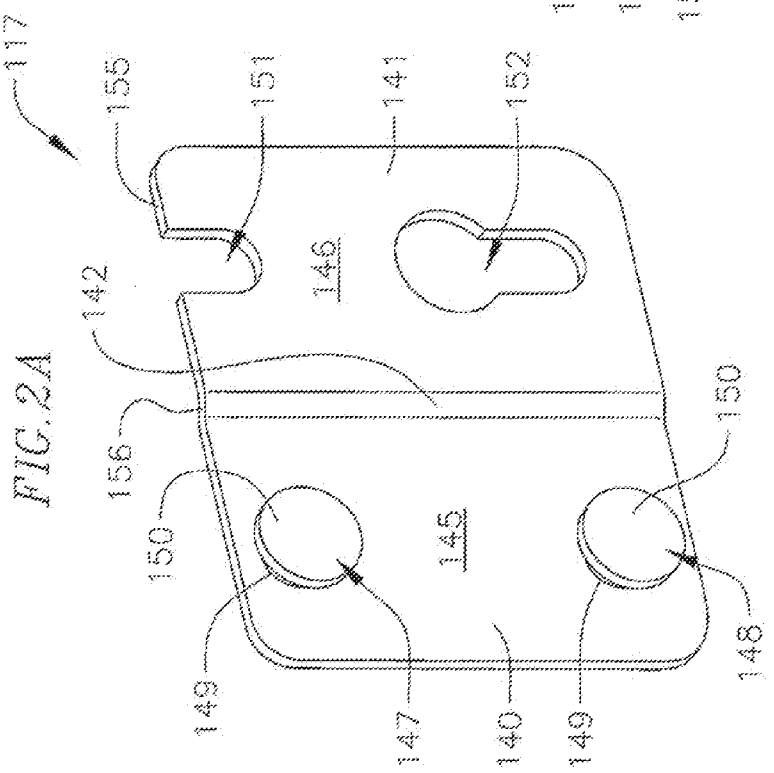
117
155
151
141
152
146
142
156
150
150
145
149
147
140
149
148

FIG. 2A

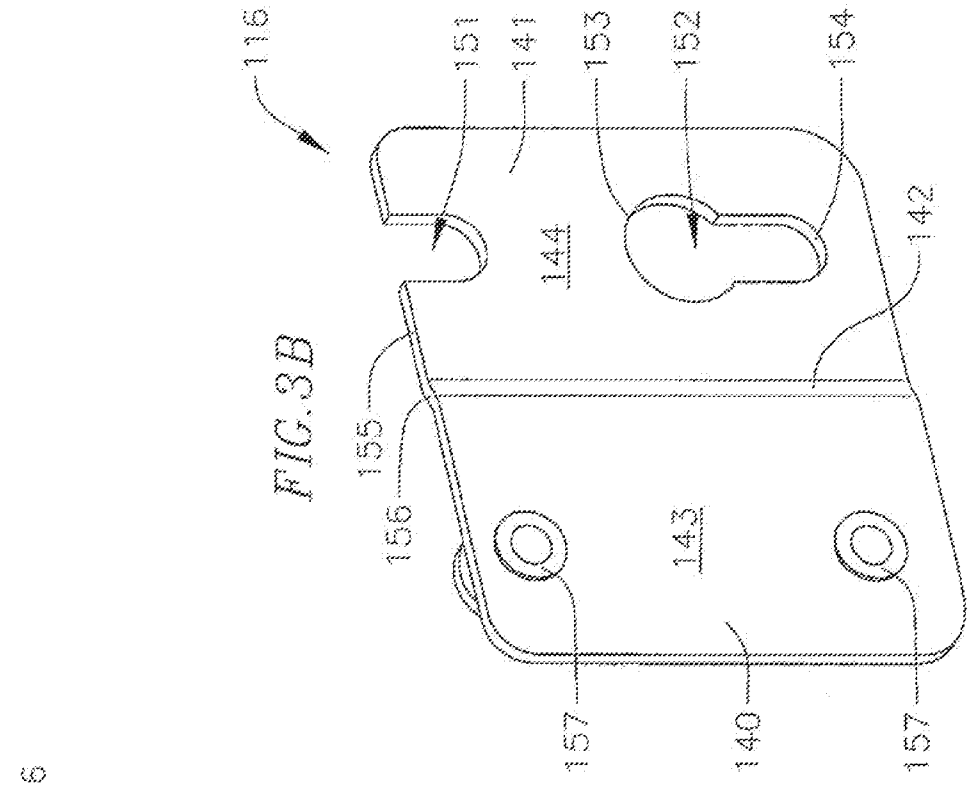
116
151
141
153
152
154
144
142
155
156
143
157
140
157

FIG. 3B

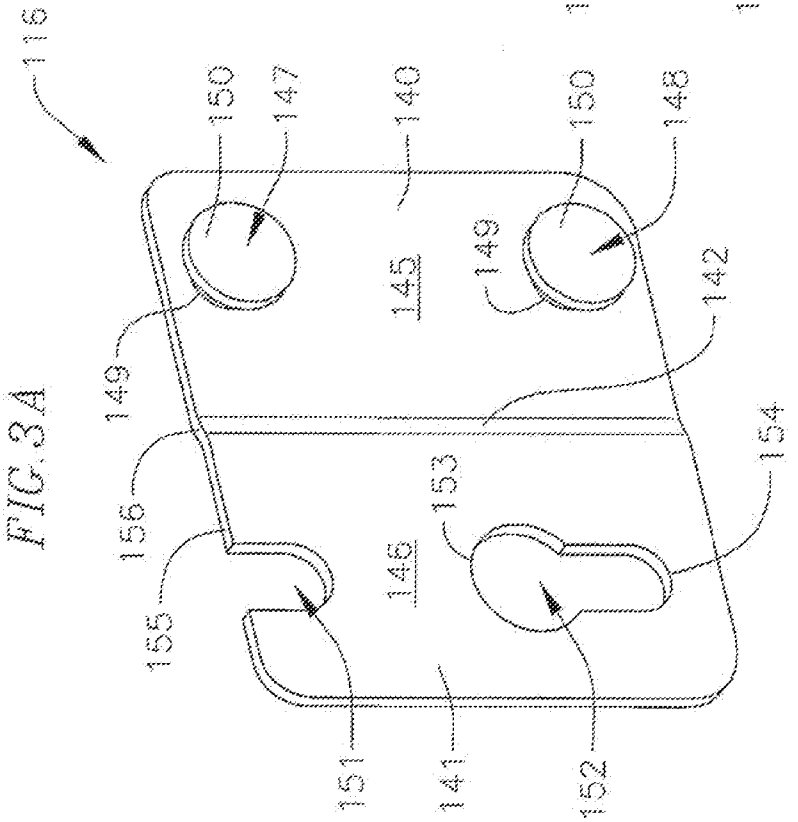
116
150
147
140
150
148
145
149
142
149
156
154
153
155
146
151
141
152

FIG. 3A

FIG. 4

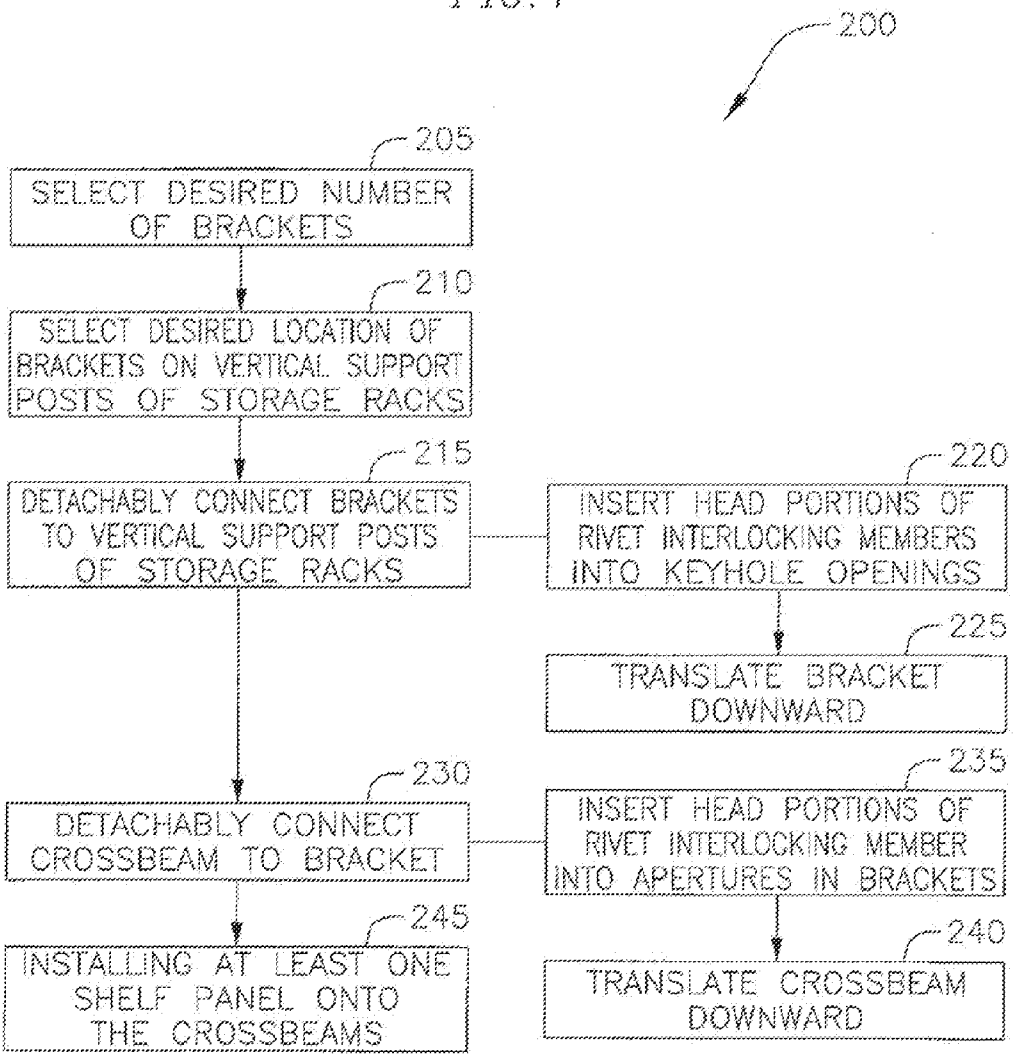
200
205
SELECT DESIRED NUMBER OF BRACKETS
210
SELECT DESIRED LOCATION OF BRACKETS ON VERTICAL SUPPORT POSTS OF STORAGE RACKS
215
DETACHABLY CONNECT BRACKETS TO VERTICAL SUPPORT POSTS OF STORAGE RACKS
220
INSERT HEAD PORTIONS OF RIVET INTERLOCKING MEMBERS INTO KEYHOLE OPENINGS
225
TRANSLATE BRACKET DOWNWARD
230
DETACHABLY CONNECT CROSSBEAM TO BRACKET
235
INSERT HEAD PORTIONS OF RIVET INTERLOCKING MEMBER INTO APERTURES IN BRACKETS
240
TRANSLATE CROSSBEAM DOWNWARD
245
INSTALLING AT LEAST ONE SHELF PANEL ONTO THE CROSSBEAMS

SHELVING SUPPORT BRACKET FOR A STORAGE RACK

[0001] This application claims priority to U.S. Patent Provisional Application Nos. 61/804,599 and 61/804,612, both filed on Mar. 22, 2013, the entire contents of which are hereby incorporated by reference.

FIELD OF THE INVENTION

[0002] The present invention relates generally to brackets configured to be detachably connected to a shelving unit and support shelves.

BACKGROUND

[0003] Storage racks and shelving units are commonly used to store a variety of different articles, such as tools and equipment in a garage (e.g., drills, brooms, shovels, extension cords, etc.), in an organized and readily accessible manner. Typical storage racks include left and right end support units and front and rear crossbeams extending between the end support units. Together, corresponding front and rear crossbeams extending between the end support units define a frame configured to support a shelf for storing various articles. Typically, each end support unit includes front and rear vertical support members and cross braces, both horizontal and diagonal, interconnecting the front and rear vertical support members.

[0004] One common type of storage rack known in the art is a "boltless" rack, in which at least some of the members of the rack are configured to be assembled without the use of permanent mechanical fasteners. In some conventional boltless racks, the members of the end support units are permanently coupled together, such as by welding or riveting, and the crossbeams are detachably connected to the vertical support members of the end support units. Typically, the vertical support posts include a series of apertures, such as wedge-shaped slots or keyhole-shaped openings, configured to detachably receive interconnecting members, such as rivets or lances, on opposite ends of the cross beams. Accordingly, boltless racks are configured to permit easy assembly and disassembly of the storage rack or shelving unit without the use of tools, and to permit compact and economical shipment of the unit. An example of a boltless shelving unit is shown and described in U.S. patent application Ser. No. 13/360,543, entitled "Modular Rack Assembly," the entire contents of which are hereby incorporated by reference.

[0005] Typically, storage capacity is limited by the number of storage racks, and additional storage racks had to be purchased to increase the user's storage capacity. However, purchasing a large number of storage racks can be cost prohibitive. Additionally, the space between existing storage racks is typically unused or underutilized space.

[0006] Attempts have been made to solve the problem of unused or underutilized space between existing storage racks. For example, U.S. Patent Application 2009/0241812A1 to Liu discloses a shelf that is extendable along a left and right direction. However, extending the Liu shelf requires complicated assembly of many pieces including a plurality of bamboo-shaped pipes, clamping pieces, several different types of bolts, and seamless cone sleeves. Furthermore, extending the shelf may be physically burdensome for some users because it requires steps of tightening bolts.

[0007] Another approach uses an extendable shelf assembly. For example, European Patent No. 1030576 to Hardy discloses an extendable shelf where the shelf frame can slide between a plurality of fixed positions along an extender. While Hardy's slidable shelf may enable a user to use a space in a flexible manner, Hardy fails to contemplate using the extendable shelf to connect between existing shelves. Furthermore, sliding shelves and their installation can be cost-prohibitive.

[0008] Thus, there is still a need for a shelf assembly system, which enables a user to utilize or convert space between two storage racks into usable storage space more efficiently.

SUMMARY OF THE INVENTION

[0009] The present invention is directed to support brackets configured to increase the storage capacity of spaced-apart storage racks. The present invention is directed to brackets configured to be detachably connected to a vertical support post of a shelving unit and a crossbeam. In one embodiment, the bracket includes a first body portion having a front surface and a rear surface, a second body portion having a front surface and a rear surface, at least one interlocking member extending rearward from the rear surface of the first body portion, the at least one interlocking member configured to detachably engage at least one of a plurality of openings in the vertical support member, and at least one aperture in the second body portion, the at least one aperture configured to detachably receive at least one interlocking member on the crossbeam. In one embodiment, the first body portion is substantially co-planar with the second body portion. In one embodiment, the first body portion is coupled to the second body portion along an adjoining portion. In another embodiment, the first body portion is non-planar with the second body portion, and the adjoining portion defines a step between the first and second body portions.

[0010] In one embodiment, the at least one interlocking member includes an upper interlocking member and a lower interlocking member, and each of the interlocking members includes a shaft having a first diameter protruding rearward from the first body portion, the shaft having an interconnected end coupled to the first body portion and a free end opposite the interconnected end, and a head having a second diameter coupled to the free end of the shaft. In one embodiment, the at least one aperture in the second body portion includes an upper aperture and a lower aperture, wherein the upper aperture includes an arcuate notch in an upper edge and the lower aperture includes a keyhole-shaped opening. In one embodiment, the interconnected ends of the shafts are plastically deformed to couple the interlocking members to the first body portion. In another embodiment, welds couple the interconnected ends of the shafts to the first body portion.

[0011] This summary is provided to introduce a selection of concepts that are further described below in the detailed description. This summary is not intended to identify key or essential features of the claimed subject matter, nor is it intended to be used in limiting the scope of the claimed subject matter.

[0012] Various objects, features, aspects and advantages of the inventive subject matter will become more apparent from the following detailed description of preferred embodiments, along with the accompanying drawing figures in which like numerals represent like components.

BRIEF DESCRIPTION OF THE DRAWINGS

[0013] Embodiments of support brackets according to the present invention are described with reference to the follow-

ing figures. The same reference numerals are used throughout the figures to reference like features and components. The figures are not necessarily drawn to scale.

[0014] FIG. **1**A is a front perspective view of two existing boltless storage racks and six pairs of right and left support brackets of the present invention supporting three pairs of front and rear crossbeams and three shelves extending between the two storage racks.

[0015] FIG. **1**B is an enlarged perspective view of one of the right support brackets of FIG. **1**A detachably connected to a vertical support post of the boltless storage rack and a crossbeam extending between the two storage racks.

[0016] FIG. **1**C is a cross-sectional view showing the crossbeam detachably connected to the right support bracket.

[0017] FIG. **1**D is a cross-sectional view showing the right support bracket detachably connected to the vertical support post of the boltless storage rack.

[0018] FIGS. **2**A and **2**B are rear and front perspective views, respectively, of the right support bracket according to an embodiment of the present invention.

[0019] FIGS. **3**A and **3**B are rear and front perspective views, respectively, of the left support bracket according to an embodiment of the present invention.

[0020] FIG. **4** is a flowchart illustrating a method of installing and using the support brackets according to an embodiment of the present invention.

DETAILED DESCRIPTION

[0021] The following discussion provides many example embodiments of the inventive subject matter. Although each embodiment represents a single combination of inventive elements, the inventive subject matter is considered to include all possible combinations of the disclosed elements. Thus if one embodiment comprises elements A, B, and C, and a second embodiment comprises elements B and D, then the inventive subject matter is also considered to include other remaining combinations of A, B, C, or D, even if not explicitly disclosed.

[0022] The present invention relates to support brackets configured to be detachably connected to boltless shelving units. The brackets of the present invention are configured to increase the storage capacity of two closely spaced storage racks by utilizing or converting the space between the two storage racks into usable, organized storage space. In particular, the brackets are configured to increase the storage capacity of the existing storage racks by supporting crossbeams and shelves extending between the two shelving units. The support brackets are preferably repositionable along the shelving units such that the height of the shelves and the spacing between adjacent shelves can be selected to accommodate various shaped and sized articles, such as tools and other equipment commonly stored in a garage.

[0023] Referring now to the embodiment illustrated in FIG. **1**A, two closely spaced existing storage racks **100**, **101** are illustrated. Each of the storage racks **100**, **101** includes left and right end support units **102**, **103**, respectively, interconnected by front and rear crossbeams **104**, **105**, respectively. Each end support unit **102**, **103** includes front and rear vertical support posts **106**, **107**, respectively, and horizontal braces **108** extending between the front and rear vertical support posts **106**, **107** (i.e., front ends **109** of the horizontal braces **108** are connected to the front vertical support posts **106** and rear ends **110** of the horizontal braces **108** are connected to the rear vertical support posts **107**). In the illustrated embodiment, each end support unit **102**, **103** includes five horizontal braces **108**, although it will be appreciated that the end support units **102**, **103** may have any other suitable number of horizontal support braces **108**, such as between two and ten or more, depending upon the desired storage capacity of the storage racks **100**, **101** and the shape and size of the various articles the storage racks **100**, **101** are configured to support. In another embodiment, the end support units **102**, **103** may also include diagonal braces extending between the front and rear vertical support posts **106**, **107**, respectively. In the illustrated embodiment, the horizontal braces **108** are boltlessly and detachably connected to the vertical support posts **106**, **107**, although it will be appreciated that the horizontal braces **108** may be connected to the vertical support posts **106**, **107** by any other suitable means, such as mechanical fastening or welding.

[0024] With continued reference to FIG. **1**A, each of the vertical support posts **106**, **107** is a beam having two generally orthogonal legs **111**, **112** (i.e., each of the vertical support posts **106**, **107** includes a front leg **111** and a side leg **112** extending rearward from the front leg **111**). Together, the legs **111**, **112** define a beam having an L-shaped transverse cross-section. It will be appreciated, however, that the vertical support posts **106**, **107** may have any other suitable shape, such as a U-shaped or Z-shaped transverse cross-section. Additionally, in the illustrated embodiment, each of the legs **111**, **112** of the vertical support posts **106**, **107** includes a plurality of keyhole-shaped openings **113** arranged in a column. As used herein, the term "plurality" shall mean two or more. Each of the keyhole-shaped openings **113** includes a relatively larger upper circular opening **114** and a relatively smaller elongated opening **115** extending downward from a lower end of the larger opening **114** (best shown in FIG. **1**B). As described in detail below, contemplated support brackets **116**, **117** can be boltlessly and detachably connected to the keyhole openings **113** in the vertical support posts **106**, **107**.

[0025] For each of the two storage racks **100**, **101** illustrated in FIG. **1**A, opposite ends **118**, **119** of the front crossbeams **104** are boltlessly coupled to the front vertical support posts **106** and opposite ends **120**, **121** of the rear crossbeams **105** are boltless coupled to the rear vertical support posts **107**. It will be appreciated that the storage racks **100**, **101** may include any suitable number of crossbeams **104**, **105**, such as between two and ten or more. Additionally, the crossbeams **104**, **105** may be positioned at any suitable elevation along the vertical support posts **106**, **107**, depending upon the locations of the keyhole-shaped openings **113** in the vertical support posts **106**, **107**, the desired storage capacity of the storage racks **100**, **101**, and/or the shape and size of the various articles the storage racks **100**, **101** are configured to support. In the illustrated embodiment, the number and elevation of the front and rear crossbeams **104**, **105** corresponds to the number and elevation of the horizontal braces **108**, although it will be appreciated that the number and elevation of the front and rear crossbeams **104**, **105** may differ from the horizontal braces **108**.

[0026] With continued reference to FIG. **1**A, the crossbeams **104**, **105** each include a pair of spaced apart upper and lower vertical legs **125**, **126**, respectively. In the illustrated embodiment, the opposite ends **118**, **119** of the upper and lower vertical legs **125**, **126** of each crossbeam **104**, **105** include interlocking members **127** configured to releasably engage the keyhole-shaped openings **113** in the vertical support posts **106**, **107**. In the illustrated embodiment, each end

118, 119 of the crossbeams 104, 105 includes two interlocking members 127, although it will be appreciated that each end 118, 119 of the crossbeams 104, 105 may include any other suitable number of interlocking members 127, such as between one and three or more. The crossbeams 104, 105 each also include an upper horizontal flange 128 extending inward from a lower end of the upper vertical leg 125, a lower flange 129 extending inward and upward from an upper end of the lower vertical leg 126, and a vertical flange 130 extending between inner ends of the upper and lower horizontal flanges 128, 129 (see FIG. 1C). Together, the inwardly extending upper horizontal flanges 128 on the crossbeams 104, 105 define a ledge or a frame configured to support a shelf panel 131 or other planar support member. Together, the upper and lower vertical legs 125, 126, the upper and lower horizontal flanges 128, 129, and the vertical flange 130 of the crossbeams 104, 105 define a crossbeam having a generally omega-shaped transverse cross-section. It will be appreciated, however, that the crossbeams 104, 105 may have any other suitable shape, such as a C-shaped or Z-shaped transverse cross-section.

[0027] Still referring to FIG. 1A, a plurality of support brackets 116, 117 are illustrated coupled to the vertical support posts 106, 107 of the two existing storage racks 100, 101. As described above, the support brackets 116, 117 are configured to increase the storage capacity of the two storage racks 100, 101 by utilizing or converting the space between the two storage racks 100, 101 into usable, organized storage space. The plurality of support brackets includes both left support brackets 116 and right support brackets 117. As illustrated in FIG. 1A, each left support bracket 116 on one of the storage racks 100, 101 has a corresponding right support bracket 117 on the other storage rack 100, 101. Additionally, in the illustrated embodiment, the corresponding left and right support brackets 116, 117 are located at the same elevation on their respective storage racks 100, 101. The corresponding left and right support brackets 116, 117 are collectively referred to herein as a pair of support brackets 116, 117. Additionally, as illustrated in FIG. 1A, front and rear pairs of support brackets 116, 117 are provided. Together, each front pair of support brackets 116, 117 and each corresponding rear pair of support brackets 116, 117 are configured to support a front and a rear crossbeam 132, 133, respectively, spanning or extending between the two existing storage racks 100, 101. Together, the front and rear crossbeams 132, 133 are configured to support a shelf panel 134 or other planar support member in order to provide a surface to support various articles in an organized and accessible manner. In the illustrated embodiment, six pairs of support brackets 116, 117 are provided (i.e., three pairs of front support brackets 116, 117 and three pairs of rear support brackets 116, 117), although any other suitable number of support brackets 116, 117 may be provided, such as between two pairs of left and right support brackets 116, 117 and ten or more pairs of left and right support brackets 116, 117, depending upon the desired number of shelf panels 134. Additionally, it will be appreciated that the pairs of support brackets 116, 117 may be provided at any suitable elevations along the vertical support posts 106, 107, depending upon the size and shape of the various articles the user desires to store on the shelf panels 134 and the desired accessibility of the articles.

[0028] In the illustrated embodiment of FIG. 1A, the crossbeams 132, 133 spanning between the two storage racks 100, 101 have substantially the same configuration as the crossbeams 104, 105 provided on the two storage racks 100, 101, although it will be appreciated that the crossbeams 132, 133 may have any other suitable configuration (e.g., a generally C-shaped or Z-shaped transverse cross-section). Additionally, it will be appreciated that the length of the crossbeams 132, 133 spanning between the existing storage racks 100, 101 is not necessarily equal to the length of the crossbeams 104, 105 provided on the existing storage racks 100, 101, and the crossbeams 132, 133 may be provided in any suitable length depending upon the spacing between the existing storage racks 100, 101. Additionally, opposite ends 135, 136 of the crossbeams 132, 133 include at least one interlocking member 137 configured to detachably engage the support brackets 116, 117, as described in more detail below. As best shown in FIG. 1B, in one embodiment, each end 135, 136 of the crossbeams 132, 133 includes two interlocking members 137. In the illustrated embodiment of FIG. 1B, one of the interlocking members 137 projects forward from the upper vertical leg 125 and the other one of the interlocking member 137 projects forward from the lower vertical leg 126. Each interlocking member 137 includes a relatively smaller shaft portion 138 and a relatively larger head portion 139 on a free end of the shaft portion 138, as illustrated in FIG. 1C.

[0029] With reference now to FIG. 1B, each of the support brackets 116, 117 includes at least one interlocking member, described in detail below, configured to enable the support brackets 116, 117 to be boltlessly and detachably coupled to the keyhole-shaped openings 113 in the vertical support posts 106, 107. Additionally, each of the support brackets 116, 117 includes at least one aperture, described in detail below, configured to enable the interlocking members 137 on the ends 135, 136 of the crossbeams 132, 133 to be boltlessly and detachably coupled to the support brackets 116, 117. Accordingly, each of the support brackets 116, 117 is configured to be detachably coupled to both one of the vertical support posts 106, 107 on the storage racks 100, 101 and one end 135, 136 of one of the crossbeams 132, 133.

[0030] With reference now to FIGS. 2A and 2B, an embodiment of the right support bracket 117 will be described in detail. As illustrated in FIGS. 3A and 3B, the left support brackets 116 are mirror images of the right support brackets 117 illustrated in FIGS. 2A and 2B. Accordingly, it will be appreciated that the features described below regarding the right support brackets 117 are equally applicable to the left support brackets 116, and therefore the left support brackets 116 will not be described in any additional detail. The right support bracket 117 includes a first body portion 140 coupled to a second body portion 141 along an adjoining edge 142. In the illustrated embodiment, both the first and second body portions 140, 141, respectively, are generally flat rectangular plates, although it will be appreciated that the body portions 140, 141 may have any other suitable shape, such as square, and still fall within the scope and spirit of the present invention. The first and second body portions 140, 141 each include front surfaces 143, 144, respectively, and rear surfaces 145, 146, respectively, opposite the respective front surfaces 143, 144.

[0031] With continued reference to FIGS. 2A and 2B, the right bracket 117 also includes at least one interlocking member configured to detachably engage at least one of the keyhole-shaped openings 113 in the vertical support posts 106, 107 of the existing storage racks 100, 101. In the illustrated embodiment, the first body portion 140 of the right bracket 117 includes upper and lower interlocking members 147, 148,

respectively, although the bracket **117** may include any other suitable number of interlocking members **147**, **148**, such as between one and four or more, depending upon the desired load-bearing capacity of the bracket **117**. The spacing between the interlocking members **147**, **148** on the bracket **117** corresponds to the spacing between the keyhole-shaped openings **113** in the vertical support posts **106**, **107** of the existing storage racks **100**, **101** (i.e., the interlocking members **147**, **148** on the brackets **117** are spaced to align with the keyhole-shaped openings **113** in the vertical support posts **106**, **107**).

[0032] In the illustrated embodiment of FIGS. **1**D and **2**A, each of the interlocking members **147**, **148** comprise rivets having a shaft portion **149** projecting rearward from the rear surface **145** of the first body portion **140** of the bracket **117**. The shaft portion **149** includes an interconnected end coupled to the rear surface **145** of the bracket **117** and a free end opposite the interconnected end. The interlocking members **147**, **148** also include a head portion **150** coupled to the free end of the shaft portion **149**. In the illustrated embodiment, the head portions **150** of the interlocking members **147**, **148** each have an outer diameter larger than the outer diameter of the shaft portion **149**. Additionally, it will be appreciated that the outer diameter of the head portions **150** is smaller than the larger circular opening **114** in the keyhole openings **113** in the vertical support posts **106**, **107** such that the head portions **150** of the interlocking members **147**, **148** may be inserted in the keyhole openings **113**. Moreover, the outer diameter of the shaft portion **149** is smaller than the smaller elongated opening **115** in the keyhole openings **113** such that the interlocking members **147**, **148** can be selectively slid down into smaller elongated openings **115**, and the outer diameter of the head portion **150** is larger than the smaller elongated opening **115** of the keyhole openings **113** such that the interlocking members **147**, **148** are retained in the keyhole openings **113** in the vertical support posts **106**, **107**, as shown in FIG. **1**B. The coupling of interlocking members **147**, **148** with existing keyhole openings advantageously enables a user to install crossbeams **132**, **133** between storage racks **100**, **101** without requiring tools.

[0033] With continued reference to FIGS. **2**A and **2**B, the right support bracket **117** also includes at least one aperture configured to detachably receive the at least one interlocking member **137** on the ends **135**, **136** of the crossbeams **132**, **133** spanning between the existing storage racks **100**, **101**. In the illustrated embodiment, the second body portion **141** of the right bracket **117** includes upper and lower apertures **151**, **152**, respectively, although the bracket **35** may include any other suitable number of apertures **151**, **152**, such as between one and four or more, depending upon the desired load-bearing capacity of the bracket **117**. Additionally, in the illustrated embodiment, the number of apertures **151**, **152** in the second body portion **141** of the bracket **117** corresponds to the number of interlocking members **147**, **148** on the first body portion **140** of the bracket **117**, although it will be appreciated that the number of apertures **151**, **152** in the bracket **117** may differ from the number of interlocking members **147**, **148** on the support bracket **117**. In the illustrated embodiment, the lower aperture **152** is a keyhole-shaped opening, although it will be appreciated that the lower aperture **152** may have any other suitable shape, such as a tapered wedge shape. Substantially as described above with reference to the keyhole-shaped openings **113** in the vertical support posts **106**, **107** of the storage racks **100**, **101**, the keyhole-shaped opening **152** in the support bracket **117** includes a relatively larger upper circular opening **153** and a relatively smaller elongated opening **154** extending downward from a lower end of the larger opening **153**. Additionally, in the illustrated embodiment, the upper aperture **151** is an arcuate notch extending downward from an upper edge **155** of the second body portion **141**. In one embodiment, the arcuate notch **151** has substantially the same shape and size as the smaller elongated opening portion **154** of the keyhole-shaped lower aperture **152**, although it will be appreciated that the upper aperture **151** may have any other suitable shape, such as a tapered wedge shape.

[0034] With continued reference to the embodiment illustrated in FIGS. **2**A and **2**B, the first and second body portions **140**, **141**, respectively, are non-planar such that a step **156** is defined along the adjoining edge **142** of the first and second body portions **140**, **141**, respectively. The step **156** in the support bracket **117** is configured such that the second body portion **141** of the support bracket **117** is co-planar with the front legs **111** of the vertical support posts **106**, **107**, as illustrated in FIGS. **1**A and **1**B. Accordingly, the step **156** in the support bracket **117** is configured such that the crossbeams **132**, **133** spanning between the two storage racks **100**, **101** are in line with the vertical support posts **106**, **107**. Otherwise, the crossbeams **132**, **133** spanning between the two storage racks **100**, **101** would be spaced apart by a distance different than the spacing between the crossbeams **104**, **105** provided on the storage racks **100**, **101**. Spacing the crossbeams **132**, **133** apart by a distance different than the spacing between the crossbeams **104**, **105** provided on the storage racks **100**, **101** could result in the shelf panels **131** on the storage racks **100**, **101** not fitting on the crossbeams **132**, **133** spanning between the storage racks **100**, **101** (i.e., the shelf panels **131** on the storage racks **100**, **101** may not be interchangeable with shelf panels **134**). In an alternate embodiment, however, the first and second body portions **140**, **141** of the right support bracket **117** may be substantially co-planar. The co-planar or substantially co-planar bracket enables a user to use a shelf panel **134** having substantially the same width as **131**, where the width is defined as a distance between the rear vertical post **107** and the front vertical post **106**.

[0035] The left and right support brackets **116**, **117** may be formed from any suitable process, such as stamping, pressing, machining, molding, or rapid prototyping using additive manufacturing. In one embodiment, the interlocking members **147**, **148** are welded to the rear surface **145** of the first body portion **140**. In an alternate embodiment, the shaft portions **149** of the interlocking members **147**, **148** are inserted through openings in the first body portion **140** of the brackets **116**, **117** and the interconnected ends **157** of the shaft portions **149** are deformed, such as by bucking with a rivet gun, to couple the interlocking members **147**, **148** to the first body portion **140**, as illustrated in FIGS. **2**B and **3**B. The left and right brackets **116**, **117** may be made of any suitably strong and durable material, such as aluminum alloy, steel, plastic (e.g., polyvinyl chloride (PVC) or polypropylene (PP)), or carbon fiber reinforced plastic.

[0036] With reference now to the flowchart illustrated in FIG. **4**, a method **200** of installing and using the brackets **116**, **117** of the present invention to increase the storage capacity of two spaced apart storage racks **100**, **101** is presented. In one embodiment, the method **200** includes a step **205** of selecting a desired number of brackets **116**, **117** based upon the desired additional storage capacity and the shape and size of the various articles the user desires to store. The method **200** also

includes a step **210** of selecting the desired locations of the brackets **116**, **117** along the vertical support posts **106**, **107** of the storage racks **100**, **101**. The desired positions of the brackets **116**, **117** on the storage racks **100**, **101** may be based upon several factors, including the nature of the article(s) the user intends to store and the desired accessibility of the article(s). In some contemplated embodiments, step **205** alternatively comprises instructing a user to select the desired locations of the brackets **116**, **117** along the vertical support posts **106**, **107** of the storage racks **100**, **101**, and step **210** alternatively comprises instructing a user to select a desired number of brackets **116**, **117** based upon the desired additional storage capacity and the shape and size of the various articles the user desires to store.

[0037] The method **200** also includes a step **215** of detachably connecting the brackets **116**, **117** to the desired locations along the vertical support posts **106**, **107** of the storage racks **100**, **101**. To attach the brackets **116**, **117** to the keyhole-shaped openings **113** in the vertical support posts **106**, **107** of the storage racks **100**, **101**, the method **200** includes a step **220** of inserting the head portions **150** of the rivet interlocking members **147**, **148** into the larger, upper circular opening **114** portions of the desired keyhole openings **113**, and a step **225** of translating the brackets **116**, **117** downward until the head portion **150** of the rivet interlocking members **147**, **148** are aligned with the smaller elongated opening **115** portions of the keyhole openings **113**, as illustrated in FIGS. **1**B and **1**D.

[0038] The method **200** also includes a step **230** of detachably connecting the crossbeams **132**, **133** to the support brackets **116**, **117**. To attach the crossbeams **132**, **133** to the apertures **151**, **152** in the brackets **116**, **117**, the method **200** includes a step **235** of inserting the head portion **139** of the lower rivet interlocking members **137** on the crossbeams **132**, **133** into the larger, upper circular opening **153** portions of the lower keyhole-shaped apertures **152** in the brackets **116**, **117**. The method **200** also includes a step **240** of translating the crossbeams **132**, **133** downward until the shaft portions **138** of the upper rivet interlocking members **137** on the crossbeams **132**, **133** are seated in the lower end of the arcuate notches **151** in the support brackets **116**, **117** and the shaft portions **138** of the lower rivet interlocking members **137** on the crossbeams **132**, **133** are seated in the smaller elongated opening **154** portions of the lower keyhole-shaped apertures **152** in the support brackets **116**, **117**, as illustrated in FIGS. **1**B and **1**C. When the support brackets **116**, **117** and the crossbeams **132**, **133** are installed, the rear surfaces **145** of the first body portions **140** of the support brackets **116**, **117** abut a portion of the front legs **111** of the vertical support posts **106**, **107**, and the rear surfaces **146** of the second body portions **141** of the support brackets **116**, **117** abut a portion of the upper and lower vertical legs **125**, **126** of the crossbeams **132**, **133**, as illustrated in FIGS. **1**B and **1**C. The method **200** also includes a step **245** of installing at least one shelf panel **134** or other planar support member onto the crossbeams **132**, **133**.

[0039] While in one embodiment, the method **200** of installing and using the brackets **116**, **117** may include each of the steps described above and shown in FIG. **4**, in other embodiments of the present invention, one or more of the steps described above and shown in FIG. **4** may be absent and/or additional steps may be performed. Furthermore, in the method **200** of installing and using the brackets **116**, **117** according to one embodiment, the steps may be performed in the order depicted in FIG. **4**. However, the present invention is not limited thereto and, in a method of installing and using the brackets **116**, **117** according to other embodiments of the present invention, the steps described above and shown in FIG. **4** may be performed in any other suitable sequence. For example, in one embodiment, the step **215** of detachably connecting the brackets **116**, **117** to the desired locations along the vertical support posts **106**, **107** of the storage racks **100**, **101** is performed before the step **230** of detachably connecting the crossbeams **132**, **133** to the support brackets **116**, **117**, while in an alternate embodiment, the step **230** of detachably connecting the crossbeams **132**, **133** to the support brackets **116**, **117** can be performed before the step **215** of detachably connecting the brackets **116**, **117** to the desired locations along the vertical support posts **106**, **107** of the storage racks **100**, **101**.

[0040] While this invention has been described in detail with particular references to exemplary embodiments thereof, the exemplary embodiments described herein are not intended to be exhaustive or to limit the scope of the invention to the exact forms disclosed. Persons skilled in the art and technology to which this invention pertains will appreciate that alterations and changes in the described structures and methods of assembly and operation can be practiced without meaningfully departing from the principles, spirit, and scope of this invention, as set forth in the following claims. Although relative terms such as "outer," "inner," "upper," "lower," "below," "above," "vertical, "horizontal" and similar terms have been used herein to describe a spatial relationship of one element to another, it is understood that these terms are intended to encompass different orientations of the various elements and components of the device in addition to the orientation depicted in the figures.

[0041] As used herein, and unless the context dictates otherwise, the term "coupled to" is intended to include both direct coupling (in which two elements that are coupled to each other contact each other) and indirect coupling (in which at least one additional element is located between the two elements). Therefore, the terms "coupled to" and "coupled with" are used synonymously.

[0042] As used in the description herein and throughout the claims that follow, the meaning of "a," "an," and "the" includes plural reference unless the context clearly dictates otherwise. Also, as used in the description herein, the meaning of "in" includes "in" and "on" unless the context clearly dictates otherwise.

[0043] Groupings of alternative elements or embodiments of the invention disclosed herein are not to be construed as limitations. Each group member can be referred to and claimed individually or in any combination with other members of the group or other elements found herein. One or more members of a group can be included in, or deleted from, a group for reasons of convenience and/or patentability. When any such inclusion or deletion occurs, the specification is herein deemed to contain the group as modified thus fulfilling the written description of all Markush groups used in the appended claims

[0044] It should be apparent to those skilled in the art that many more modifications besides those already described are possible without departing from the inventive concepts herein. The inventive subject matter, therefore, is not to be restricted except in the spirit of the appended claims. Moreover, in interpreting both the specification and the claims, all terms should be interpreted in the broadest possible manner consistent with the context. In particular, the terms "comprises" and "comprising" should be interpreted as referring to

elements, components, or steps in a non-exclusive manner, indicating that the referenced elements, components, or steps may be present, or utilized, or combined with other elements, components, or steps that are not expressly referenced. Where the specification claims refers to at least one of something selected from the group consisting of A, B, C . . . and N, the text should be interpreted as requiring only one element from the group, not A plus N, or B plus N, etc.

What is claimed is:

1. A support bracket configured to be connected to a vertical support post of a shelving unit and a crossbeam, the support bracket comprising:

a first body portion having a front surface and a rear surface;

a second body portion having a front surface and a rear surface;

at least one interlocking member extending rearward from the rear surface of the first body portion, the at least one interlocking member configured to detachably engage at least one of a plurality of openings in the vertical support post; and

at least one aperture in the second body portion, the at least one aperture configured to detachably receive at least one interlocking member on the crossbeam.

2. The support bracket of claim **1**, wherein the first body portion is substantially co-planar with the second body portion.

3. The support bracket of claim **1**, wherein the first body portion is coupled to the second body portion along an adjoining portion.

4. The support bracket of claim **3**, wherein the first body portion is non-planar with the second body portion, and wherein the adjoining portion defines a step between the first and second body portions.

5. The support bracket of claim **1**, wherein the at least one interlocking member comprises an upper interlocking member and a lower interlocking member, each of the interlocking members comprising:

a shaft having a first diameter protruding rearward from the first body portion, the shaft having an interconnected end coupled to the first body portion and a free end opposite the interconnected end; and

a head having a second diameter coupled to the free end of the shaft, wherein the second diameter is larger than the first diameter.

6. The support bracket of claim **5**, wherein the at least one aperture in the second body portion comprises an upper aperture and a lower aperture, the upper aperture comprising an arcuate notch in an upper edge and the lower aperture comprising a keyhole-shaped opening.

7. The support bracket of claim **5**, wherein the interconnected ends of the shafts are plastically deformed to couple the interlocking members to the first body portion.

8. The support bracket of claim **5**, wherein welds couple the interconnected ends of the shafts to the first body portion.

9. A system configured to convert a space between a first storage rack and a second storage rack into usable storage space, each storage rack comprising front vertical support members and rear vertical support members, the system comprising:

a front crossbeam having opposing ends, each of the opposing ends of the front crossbeam having at least one interlocking member;

a rear crossbeam having opposing ends, each of the opposing ends of the rear crossbeam having at least one interlocking member;

first, second, third, and fourth support brackets, each support bracket comprising:

a first body portion having a front surface and a rear surface;

a second body portion having a front surface and a rear surface;

at least one interlocking member extending rearward from the rear surface of the first body portion, the at least one interlocking member configured to detachably engage at least one of a plurality of openings in the vertical support members; and

at least one aperture in the second body portion, the at least one aperture configured to detachably receive at least one of the interlocking members on the crossbeams.

10. The system of claim **9**, wherein, for each of the first, second, third, and fourth support brackets, the first body portion is substantially co-planar with the second body portion.

11. The system of claim **9**, wherein, for each of the first, second, third, and fourth support brackets, the first body portion is coupled to the second body portion along an adjoining portion.

12. The system of claim **11**, wherein, for each of the first, second, third, and fourth support brackets, the first body portion is non-planar with the second body portion, and wherein the adjoining portion defines a step between the first and second body portions.

13. The system of claim **9**, wherein, for each of the first, second, third, and fourth support brackets, the at least one interlocking member comprises an upper interlocking member and a lower interlocking member, each of the interlocking members comprising:

a shaft having a first diameter protruding rearward from the body portion, the shaft having an interconnected end coupled to the first body portion and a free end opposite the interconnected end; and

a head having a second diameter coupled to the free end of the shaft, wherein the second diameter is larger than the first diameter.

14. The system of claim **13**, wherein the at least one aperture in the second body portion comprises an upper aperture and a lower aperture, the upper aperture comprising an arcuate notch in an upper edge and the lower aperture comprising a keyhole-shaped opening.

15. The system of claim **14**, wherein:

the upper and lower interlocking members on the first support bracket are detachably connected to two keyhole-shaped openings in one of the front vertical support members of the first storage rack;

the upper and lower interlocking members on the second support bracket are detachably connected to two keyhole-shaped openings in one of the front vertical support members of the second storage rack;

the at least one interlocking member on one of the opposing ends of the front crossbeam is detachably connected to the upper and lower apertures in the first support bracket;

the at least one interlocking member on the other one of the opposing ends of the front crossbeam is detachably connected to the upper and lower apertures in the second support bracket;

the upper and lower interlocking members on the third support bracket are detachably connected to two key-hole-shaped openings in one of the rear vertical support members of the first storage rack;

the upper and lower interlocking members on the fourth support bracket are detachably connected to two key-hole-shaped openings in one of the rear vertical support members of the second storage rack;

the at least one interlocking member on one of the opposing ends of the rear crossbeam is detachably connected to the upper and lower apertures in the third support bracket; and

the at least one interlocking member on the other one of the opposing ends of the rear crossbeam is detachably connected to the upper and lower apertures in the fourth support bracket.

16. The system of claim **15**, further comprising a shelf supported by the front and rear crossbeams.

* * * * *