March 4, 1924. 1,485,910

R. K. DAWSON

FITTING FOR REVOLVING CHAIRS AND THE LIKE

Filed June 13, 1921

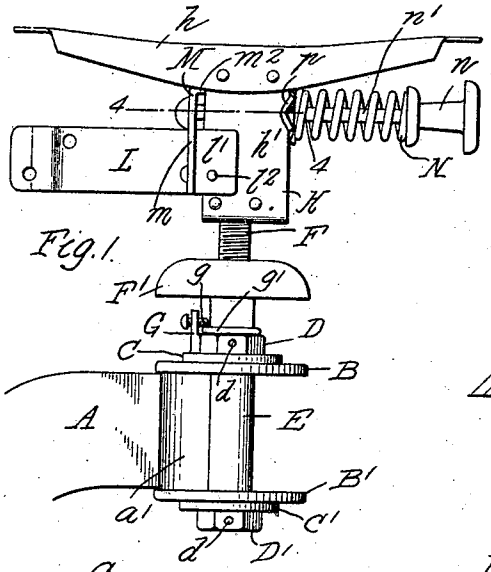

Fig. 1.

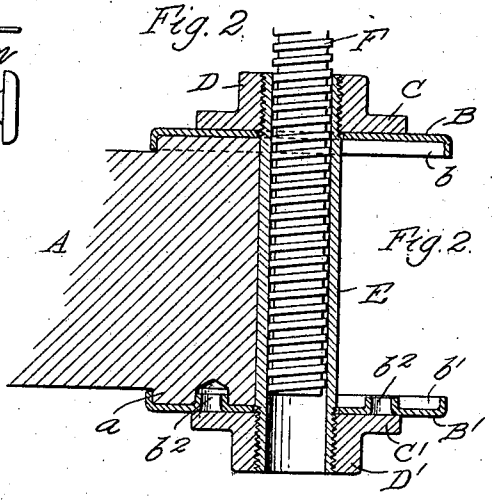

Fig. 2.

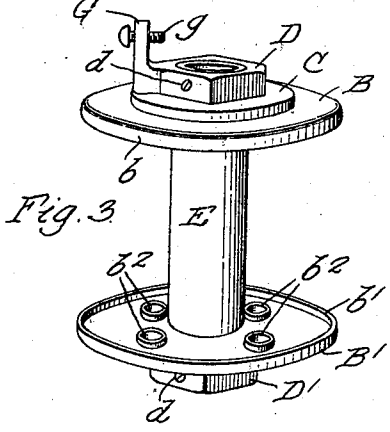

Fig. 3.

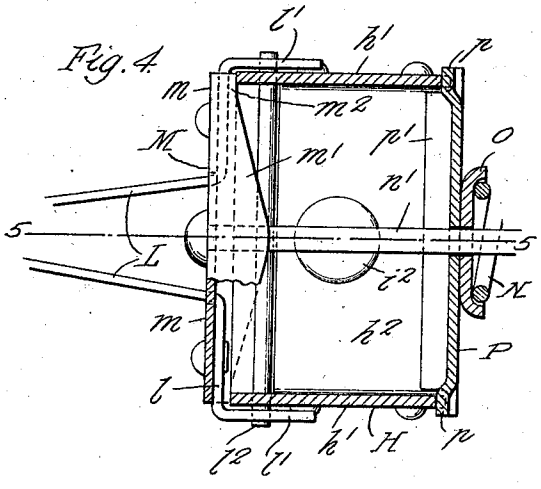

Fig. 4.

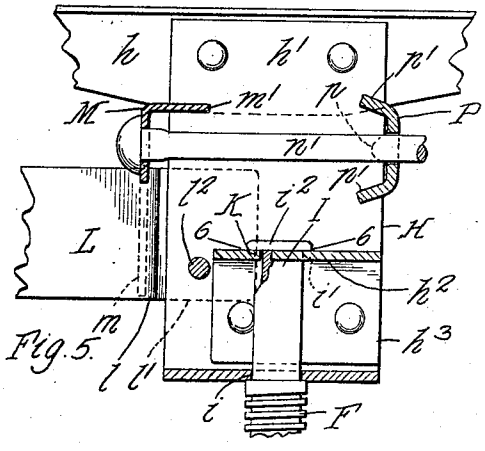

Fig. 5.

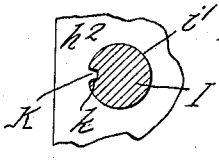

Fig. 6.

INVENTOR.
Robert K. Dawson
by Parker & Prochnow,
ATTORNEYS.

Patented Mar. 4, 1924. 1,485,910

UNITED STATES PATENT OFFICE.

ROBERT K. DAWSON, OF GUELPH, ONTARIO, CANADA.

FITTING FOR REVOLVING CHAIRS AND THE LIKE.

Application filed June 13, 1921. Serial No. 477,074.

To all whom it may concern:

Be it known that I, ROBERT K. DAWSON, a subject of the King of Great Britain, residing at Guelph, in the Province of Ontario and Dominion of Canada, have invented a new and useful Improvement in Fittings for Revolving Chairs and the like, of which the following is a specification.

This invention relates to fittings for use in connection with revolving chairs, and more particularly to mechanism for permitting the chair back to tilt relatively to the seat.

The objects of the invention are to provide means of improved construction for enabling the back of the chair to tilt relatively to the seat thereof; also to provide means of improved construction for mounting the seat on the spindle; also to improve the construction of fittings of this kind in other respects hereinafter specified.

In the accompanying drawings:

Fig. 1 is a side elevation of a chair fitting embodying the invention.

Fig. 2 is a fragmentary central sectional elevation thereof.

Fig. 3 is a perspective view of the means for securing together the parts of the chair base.

Fig. 4 is a fragmentary sectional plan view of the chair fitting on line 4—4, Fig. 1.

Fig. 5 is a fragmentary sectional elevation thereof on line 5—5, Fig. 4.

Fig. 6 is a fragmentary sectional plan view thereof on line 6—6, Fig. 5.

A represents a chair leg, only one being shown for purpose of illustration, which is preferably provided at its inner end with an enlarged or shouldered portion *a* projecting beyond the upper and lower edges of the legs. *a'* represents one of the corner pieces which are customarily arranged between the inner ends of the legs. The legs and corner pieces are preferably secured together by means of the following construction:

The upper faces of the legs A are adapted to be engaged by means of a sheet metal plate or disk B preferably having a peripheral, downwardly turned flange *b* engaging the edges of the shouldered portions *a* of the legs. These flanges also serve to hold the corner pieces *a'* in place between adjacent legs. The lower faces of the legs and the corner pieces are engaged by a corresponding plate B' having an upwardly turned flange *b'*, and this plate is preferably provided with a plurality of upwardly extending, substantially cylindrical bosses or portions b^2 extending into correspondingly shaped holes in the lower faces of the legs A. The cylindrical portions b^2 are preferably formed integral with the plate B' by stamping or forming in suitable dies. If desired, the upper plate B may also be provided with cylindrical projections of this type but these projections are preferably omitted from the upper plate as shown in the drawings. The projections are provided with cylindrical walls which in entering into the holes in the legs, securely hold the legs in place with regard to the plate B and which take the place of the usual wood screws heretofore provided for securing the legs to the plates of the chair hub. The plates B and B' may be made of comparatively thin sheet metal so that the cost of manufacture of the same is greatly reduced.

In order to prevent the plates B and B' from being bent or otherwise distorted, owing to the fact that they are made of relatively thin metal, suitable reinforcing flanges or members are provided which engage the upper and lower leg engaging plates to hold the same in correct relation to the legs and prevent the buckling or warping of the plates due to strains to which the plates may be subjected. In the construction shown for this purpose, reinforcing disks, flanges or members C and C' are provided which are adapted to engage portions of the leg engaging plates. These reinforcing members are preferably made somewhat smaller than the plates B B' and the lower reinforcing member is preferably made of sufficient size to cover those portions of the lower leg engaging plates which are provided with the bosses or projections b^2, so as to hold these bosses securely in engagement with the chair legs.

The reinforcing members may be pressed into clamping engagement with the leg engaging plates by any suitable means, clamping nuts D D' being employed in the particular embodiment of the invention shown, which may be moved in any suitable manner into positions to cause the reinforcing members to engage the leg engaging plates. In the particular construction shown in the drawings, these nuts engage an upright cen-

tral hub member, which as shown, is in the form of an upright tubular hub member E which extends centrally between the legs and the corner pieces a'. In the construction shown, the upper and lower ends of the upright tubular member are screw threaded and by turning either one of the clamping nuts thereon, these nuts, together with the reinforcing flanges or parts C C′, are drawn into clamping engagement with the leg engaging plates, and thus force the plates into clamping engagement with the upper and lower faces of the legs. The reinforcing disks or flanges C C′ may, if desired, be formed integral with the nuts D D′, and one of the nuts may, if desired, be rigidly or permanently secured to the tubular hub member. The tubular hub member is preferably made of a piece of standard steel tubing, thereby producing a strong and inexpensive construction. Any other means for pressing the reinforcing members into engagement with the plates B B′ may be employed.

By means of this arrangement, the reinforcing disks or flanges clamp the plates against the legs, so that a change of shape of the reinforcing disks is entirely prevented, and in the case of the lower leg engaging plate, the cylindrical portions or bosses b^2 are securely held in engagement in the holes in the legs. This construction has the advantage of entirely eliminating the use of screws in securing the legs to the hub portion of the chair and thereby saves a considerable amount of time and expense in the assembling of the chairs. The construction has the further advantage that in case the legs of the chair shrink due to drying out or other causes, the nuts D D′ can be easily tightened on the tubular member so as to securely clamp the legs. In order to prevent the nuts from becoming loosened on the tubular member, set screws d are preferably provided in the nuts which engage the tubular member and prevent relative movement between the nuts and the tubular member.

The seat (not shown) of the chair is supported upon the usual spindle or stem F which extends through the tubular member of the chair base. The elevation of the seat with reference to the base may be adjusted by means of the usual adjusting screw or nut F′ having a threaded engagement with the spindle and bearing on the upper clamping nut D. In order to hold the spindle rotatably in place in the tubular hub portion, the upper clamping member of the hub is preferably provided with an upwardly extending projection G having a screw g arranged thereon which is adapted to engage an outwardly extending flange g' of the adjusting nut F′.

The chair seat is adapted to be mounted on a suitable spider including arms h, the middle portions of which are secured to a seat supporting member H, which in the construction shown, is made of a piece of sheet metal bent into substantially U-shape having a substantially horizontal body portion and upwardly extending sides or parts h' to which the arms h are secured. At the lower portion of this seat supporting member a reinforcing member h^2, preferably of inverted U-shape, is arranged, which has a body portion extending substantially parallel to the body portion of the seat supporting member and which has downwardly extending flanges or sides h^3 which are secured to the sides h' of the seat supporting member H. The upper end of the spindle is rigidly connected to the seat supporting member in any desired manner. In the construction shown the upper end of the spindle has a reduced portion I which extends through holes i and i' in the body portions of the seat supporting member H and reinforcing member h^2 respectively and the upper end of the spindle is preferably riveted over or headed as indicated at i^2 to form a rigid connection between the seat supporting member and the upper end of the spindle. The upper end of the spindle is also preferably provided with a slot or keyway k and in order to hold the spindle and seat supporting member from turning relatively to each other, the hole i' in the reinforcing member h^2 is preferably provided with an integral, inwardly extending lip or projection K which is so formed as to enter into the keyway k. The connection described between the spindle and seat supporting member is inexpensive to construct since the key portion or lip K can be formed in the punching of the hole i' in the reinforcing member h^2 and the reduced end of the spindle can be readily headed as described, so that the connection between the stem and the seat supporting member is secure and rigid. Any other means for supporting the seat from the spindle may be employed if desired.

The seat supporting member H is preferably also provided with means for supporting a tiltable back for the chair. This back (not shown) may be of any desired construction and is suitably mounted on a pair of back supporting members or arms L which are provided at their outer ends with means of any desired construction for supporting the back of the chair therefrom. The back supporting arms are preferably provided with portions l bent in a direction transversely of their length and the inner ends l' of the back supporting arms are bent to extend lengthwise of the arms and are pivoted at l^2 on the seat supporting member H. The two back supporting arms are conected by means of a substantially U-shaped connecting plate M having downwardly extending arms m which are adapted to be secured to the transversely extending portions l of the back supporting

arms and the upper portion of the connecting plate M is bent over to extend in a substantially horizontal direction and forms a reinforcing flange or web m' for this plate. This portion is preferably of substantially truss shape having its greatest width in the middle portion thereof and provided at its opposite ends with portions m^2 of reduced width, which form stops to limit the swinging of the arms L about the pivots l^2, the stop portions m^2 engaging the edges of the upright flanges of the U-shaped seat supporting member H.

The rearward swinging of the back of the chair is opposed by means of a spring N, one end of which engages an adjusting screw n having a threaded engagement with a rod n', the other end of which extends through a hole in the connecting plate M adjacent to the truss shaped reinforcing flange m'. The opposite end of the spring N, in the construction shown, engages a spring supporting cup or dished plate O which bears against a pivot or bridge member P provided at its opposite ends with integral rounded portions p engaging corresponding depressions in the edges of the upright legs of the U-shaped seat supporting member H. The intermediate portions of the bridge member P are preferably provided with inwardly extending reinforcing or stiffening flanges p' which extend inwardly into the space between the upright legs of the seat supporting member H and thus prevent the bridge member from moving lengthwise out of engagement with either of the flanges of the seat supporting member, as well as stiffening the bridge member against bending due to the action of the spring N.

When the back of the chair is swung rearwardly, the back supporting arms L are swung downwardly about the pivots l^2, thus drawing the bolt or rod n' against the action of the spring N. When the pressure on the back of the chair is released, the arms L will swing upwardly until the stop portions m^2 of the U-shaped connecting plate M engage the upright flanges of the seat supporting member H.

By means of the construction described, the seat and back supporting parts of the chair are extremely light in weight and simple to manufacture since they are made entirely of sheet metal parts bent into the desired forms. The base of the chair is particularly desirable since it greatly facilitates the assembling of the parts, owing to the fact that no wood screws are required to hold the legs on the hub portion of the chair.

I claim as my invention:

1. In a chair, the combination of a seat supporting member having upwardly extending parts, a pair of back supporting arms each of which is pivotally secured at one end to one of said upwardly extending parts and extends rearwardly therefrom and is provided at its other end with means for supporting a chair back, a plate connecting said arms between the ends thereof and extending transversely thereof, a spring for drawing said plate toward said upwardly extending parts, parts on said plate adapted to engage said upwardly extending parts to limit the movement of said back supporting arms in one direction and a bridge member pivotally engaging said upwardly extending parts and against which said spring bears.

2. In a chair, the combination of a seat supporting member having upwardly extending parts, a pair of back supporting arms each of which is pivotally secured at one end to one of said parts and extends rearwardly therefrom and is provided at its other end with means for supporting a chair back, a substantially upright transverse plate connecting said arms intermediate the ends thereof and having its upper portion bent to form a reinforcing flange, the ends of which are adapted to engage said upwardly extending parts to limit the swinging of said arms, and means for yieldingly holding said arms in position in which said flange engages said parts.

3. In a chair, the combination of seat supporting means including a substantially U-shaped member having upwardly extending parts, back supporting arms having end portions which are pivotally connected with said parts and intermediate portions extending at an angle to said end portions, a connecting plate secured to the intermediate portions of said arms, and resilient means connecting said U-shaped member and said connecting plate to oppose the movement of said arms in one direction.

4. In a chair, the combination of seat supporting means including a substantially U-shaped member having upwardly extending parts, back supporting arms having end portions which are pivotally connected with said parts and intermediate portions extending at an angle to said end portions, a connecting plate secured to the intermediate portions of said arms and having a substantially horizontal reinforcing flange, the ends of which are adapted to engage said upwardly extending parts to limit the movement of said back supporting arms in one direction, and resilient means connected with said connecting plate adjacent to said reinforcing flange and opposing the movement of said arms in the opposite direction.

5. In a chair, the combination of seat supporting means including a substantially U-shaped member having upwardly extending parts, back supporting arms having end portions which are pivotally connected with said parts, a connecting plate secured to said arms and adapted to engage one edge of said

upright parts to limit the movement of said arms about their pivots in one direction, a bridge member engaging the opposite edges of said parts, and resilient means connecting said bridge member and said connecting plate to oppose the swinging of said arms in the opposite direction.

6. In a chair, the combination of seat supporting means including a substantially U-shaped member having upwardly extending parts, back supporting arms having end portions which are pivotally connected with said parts, a connecting plate secured to said arms and adapted to engage one edge of said upright parts to limit the movement of said arms about their pivots in one direction, a bridge member made of sheet metal and having bearing portions at its opposite ends which engage the opposite edges of said parts, and resilient means connecting said bridge member and said connecting plate to oppose the swinging of said arms in the opposite direction.

7. In a chair, the combination of a seat supporting member having upwardly extending parts, a pair of back supporting arms pivotally secured to said parts and extending rearwardly therefrom, a substantially upright transverse plate connecting said arms and extending above said arms and having at its upper end an integral reinforcing flange, the ends of which are adapted to engage said upwardly extending parts to limit the swinging of said arms, and means connected with said plate above said arms for yieldingly holding said arms in a position in which said flange engages said parts.

ROBERT K. DAWSON.