Office de la Propriété Intellectuelle du Canada
Un organisme d'Industrie Canada

Canadian Intellectual Property Office
An agency of Industry Canada

CA 2834663 A1 2013/08/15

(21) 2 834 663

(12) DEMANDE DE BREVET CANADIEN
CANADIAN PATENT APPLICATION

(13) A1

(86) **Date de dépôt PCT/PCT Filing Date:** 2012/03/15
(87) **Date publication PCT/PCT Publication Date:** 2013/08/15
(85) **Entrée phase nationale/National Entry:** 2013/10/29
(86) **N° demande PCT/PCT Application No.:** IB 2012/000502
(87) **N° publication PCT/PCT Publication No.:** 2013/117952
(30) **Priorité/Priority:** 2012/02/09 (DE10 2012 002 528.9)

(51) **Cl.Int./Int.Cl.** ***B03C 1/033*** (2006.01),
B03C 1/22 (2006.01)

(71) **Demandeur/Applicant:**
AKAI GMBH & CO. KG, DE

(72) **Inventeur/Inventor:**
KOSLOW, ALEXANDER, DE

(74) **Agent:** SMART & BIGGAR

(54) **Titre : PROCEDE ET DISPOSITIF DE SEPARATION DE TOUS LES CONSTITUANTS NON MAGNETIQUES D'UN MELANGE DE DECHETS METALLIQUES EN VUE D'OBTENIR DES DECHETS PUREMENT FERREUX**
(54) **Title: PROCESS AND DEVICE FOR SEPARATION OF ALL NON-MAGNETIC PARTICLES FROM A CONGLOMERATE OF METAL SCRAP IN ORDER TO ACHIEVE PURE IRON SCRAP**

FIGUR

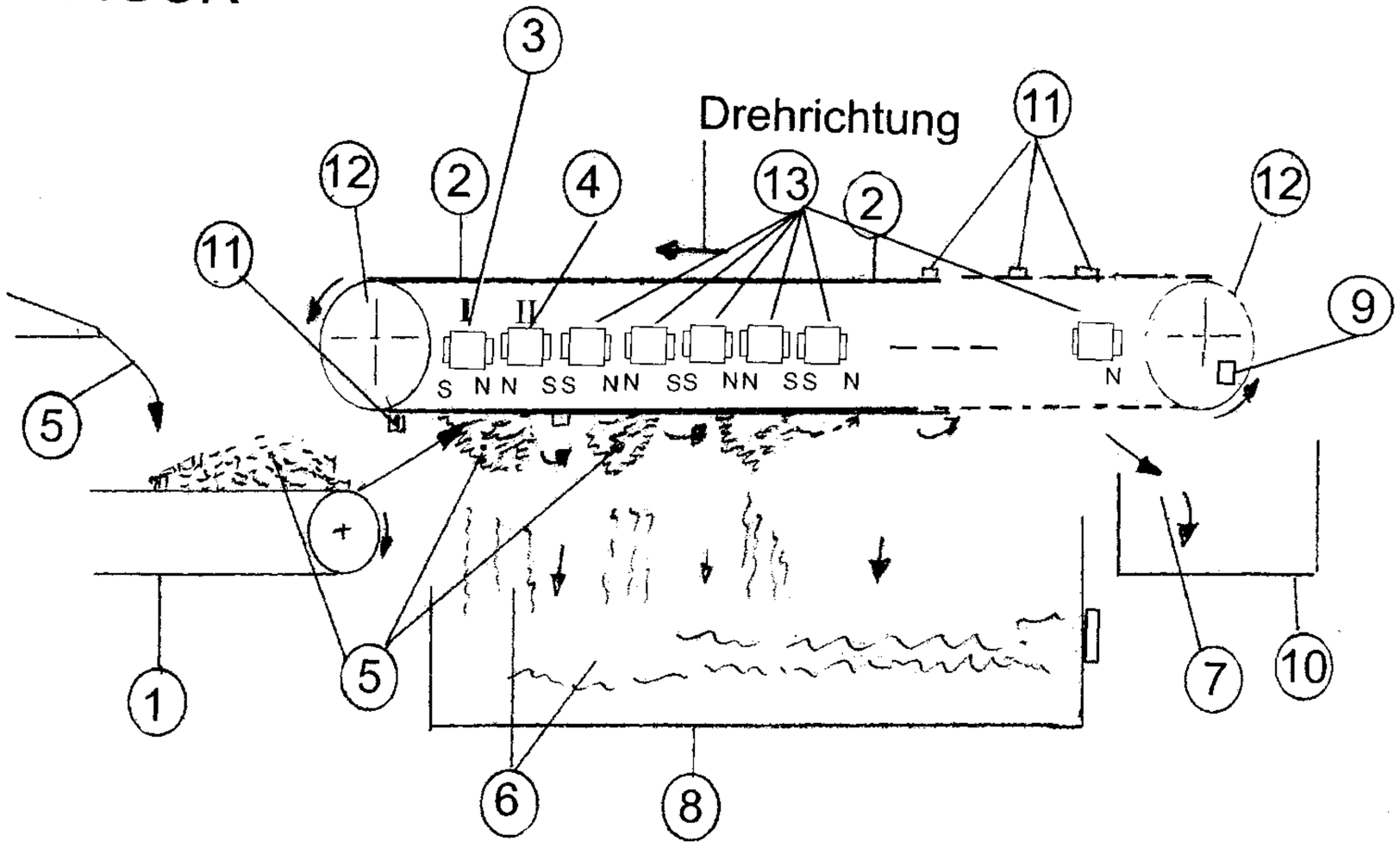

13 ... rotational direction

(57) **Abrégé/Abstract:**
The invention relates to a method and a device for dry cleaning scrap metal of nonmagnetizable components. A scrap metal mixture is brought to a transport belt device via a conveyor belt, said transport belt device consisting of a magnetic belt conveyor, the transport belt of which is guided at both ends via deflection rollers. Magnets are successively arranged in a row in the vicinity of the lower drum in the intermediate space between the upper and lower drum of the transport belt, and the magnets can be activated and deactivated intermittently. According to the invention, the intensive movement needed to separate the individual metal parts is achieved in that the north pole of each magnet is followed by the north pole of a subsequent magnet, and the south pole of each magnet is followed by the south pole of a subsequent magnet.

Abstract:

This invention relates to a process and a device for dry separation of a conglomerate of metal scrap of non-magnetic particles from magnetic ones. It is known by the state of art to use a so called magnet separator for separation of magnetic material from non-magnetic particles out of a conglomerate of metal scrap. Such a one dimensional process does not any more meet the requirements of today to produce quality-steel from scrap. On the contrary scrap which should be smelt again must consist of pure magnetic material. The production of such material is task of this invention. Even dry separation equipment for metal scrap which have a sequence of magnets placed in line, the poles of which is north-pole to south-pole are unable to meet this requirement. This insufficiency is due to the fact that the conglomerate of metal scrap is not sufficiently shook. This procedure does mean that at the end of transportation there is still non-magnetic material and other stuff fixed to the magnetic material. Intensive motion necessary is achieved by this invention by locating magnets adjacent to one another with equal poles, north-pole to north-pole and south-pole to south-pole and so on.

Translation into English of

"Process and device for separation of all non-magnetic particles from a conglomerate of metal scrap in order to achieve pure iron scrap"

Conglomerates of metal scrap are normally delivered by industry as waste and contain magnetic and non-magnetic particles as well as other residues. Since interest for further treatment is focused solely on pure metals of one type, e.g. magnetic particles as iron or non-magnetic particles as cooper, recycling enterprises are charged with the task to separate such conglomerates into each component in accordance with their individual material related characteristics. This creates significant problems since individual components of materials contained in the conglomerate are often attached together by adhesive forces to such an extent or by loose connection that a normal magnet sorter cannot clearly separate magnetic from non-magnetic components. Small non-magnetic particles mostly are still combined with magnetic particles or combined by adhesion and enter together with magnetic parts to a follow-up melting process. Steel obtained from such a material composition does not meet the existing standards for high quality steel since steel quality suffers from such a mixture of different components. In order to meet the standards for high quality steel requested today, scrap released for melting must consist of pure iron and is not allowed to contain non-magnetic particles as cooper, not even in form of cooper dust.

A clear separation of magnetic and non-magnetic material components is task of this invention.

Until now for such separation so called magnet sorters were used. Such magnet separators consist of a conveyer belt of non-magnetic material above which magnets are placed. That apparatus is fed by a conglomerate consisting of metal scrap that contains differing components of metal. Magnets attract magnetic particles and allow only part of the non-magnetic particles to fall into a collection container for residues. This kind of separation of magnetic particles contained in a conglomerate of metal is not sufficient since non-magnetic particles still adhere to magnetic particles in a lose way.

A known embodiment recommends for such handling to transport a conglomerate of metal scrap by using a conveyer belt, the belt of which is guided at both ends across deflection pulleys. In the space between the upper trunk and lower trunk of the conveyer belt close to the lower part of the conveyer belt magnets are arranged in a row one following the next one. These magnets may be activated and deactivated intermittingly. This known dry separating machine for non-magnetic particles out of a conglomerate of metal scrap does not meet anymore the existing requirements. That conglomerate of metal scrap is guided along a row of magnets, nonetheless the conglomerate of metal scrap is not sufficiently kept in motion along the conveyer belt (DE Patent specification 311 387), to enable separation of magnetic particles from non-magnetic particles, even though additional means may be attached to the conveyer belt. Pole orientation at this known embodiment is chosen in the following way that a south pole is subsequently followed by a north pole and so on. In this way a permanent change between south and north pole no real motion is achieved, however such a change in pole direction does not result in sufficiently needed motion to separate a conglomerate of metal scrap. Such an orientation of magnets north-south only creates an insufficient motion of the conglomerate of metal scrap transported by the conveyer belt, if any motion at all is reached.

This is the task this invention to solve that problem. Following the process according to my invention motion along the conveyer belt is intensified by choosing a placing of the magnets in the following way: a north pole is followed by a north pole and a south pole is followed by a south pole. That

arrangement means that a north pole is always followed by a north pole and a south pole is followed by a south pole and so on. This magnet arrangement results in the fact that the material at the conveyer belt is permanently in a rotating and shaking motion in order to separate all non-magnetic particles. The number of magnets placed above the conveyer belt in a row depends from the grade of a desired extent of cleanness that means the more magnets are arranged in a row the better is the achieved level of purity. In order to enable the effect of magnet forces to achieve their full power technical means are provided for dressing the conglomerate of metals prior to feeding it on the conveyor belt of a magnetic separator, e.g. to homogenize to seize by using a shredder or hammer mill. In order to support transportation and motion the belt of the magnetic sorter may be equipped on the side of the belt on which material is fed with a kind of naps, hucksters or transportation supporting strips. Designed in such a manner the conglomerate of metals will be attracted by magnetic forces to that side of the belt which is opposite to the placing of the magnets, pulled away and additional motion is stimulated. For this purpose naps are designed and placed in a variable way and positioned all over the complete width of the conveyer belt. It is solely important to keep the conglomerate of scrap permanently in intensive motion in order to make non-magnetic particles separating from magnetic ones. Since material attracted by the first magnet contains besides magnetic particles still non-magnetic ones that are attached to the magnetic particles or loosely combined with them, such material will be transported further downstream out of the range of the first magnet by naps on the conveyer belt and so taken to the range of influence of the follow-up magnet. Even when for intensifying motion on the conveyer belt alternating poling of the magnets has been chosen it is essential that poles of adjacent magnets must be identical, that does mean north pole to north pole and south pole to south pole. This pole orientation creates the motion wanted and results in the fact that non-magnetic material detaches from magnetic material and makes them fall down. This process will be repeated as often as necessary for achieving pure iron free of non-magnetic particles. Magnets of the permanent type can be used as well as electrical magnets. Electrical magnets adjacent in row to one-another have the advantage in relation to permanent magnets that a control device may deactivate a magnet up-stream and at the same time activate a magnet that is adjacent next downstream and vice-versa. That facilitates transferring from one magnet to the following one since adhesion forces vary and non-magnetic particles more easily detach from magnetic ones. Non-magnetic particles detach more easily from magnetic particles that already has passed a first separation process. This process may be repeated as often as necessary for achieving purified iron, which means iron free of any components of non-magnetic material.

A further development proposes to attach to the magnets vibration producing elements in order to keep material already attached to a magnet in intensive motion in order to enable non-magnetic material to separate.

The pulleys at the ends of the conveyer belt may as well be equipped with vibration devices, in order to keep the total conveyer belt in motion to facilitate separation of non-magnetic particles from magnetic ones.

In addition or separately separation from non-magnetic particles of a conglomerate of metal scrap may be supported by treating the conglomerate with a gas stream, e. g. airstream or stream of a liquid preferable also under pressure, e. g. water-shower with or without added chemical components, thus liberating magnetic particles as part of the conglomerate from non-magnetic particles.

All these additional measures may be used separately or combined with others in order to achieve an optimal situation for separation of magnetic particles from non-magnetic materials.

Description of the figures:

A conveyer belt (1) transports a conglomerate of metal scrap, comminuted by a shredder or hammer-mill, into the magnetic field of a first magnet of a rotating with magnets operating dispositive. The magnet of the first magnetic block I (3) attracts the conglomerate of metallic scrap (5) that is carried on a non-magnetic transportation belt (2) underneath of magnets arranged in row in direction of transport. Detachable non-magnetic material (6) easily falls down into a collection bin (8). The non-magnetic transportation belt (2) possesses on the side showing to the conglomerate of metal scrap (5) naps (11) or humps (11), however may only possess a rough surface in order to improve transportation of metal scrap (5) and to take it from a preceding magnet I to the next following magnet block II. When transporting conglomerate of metal scrap from a preceding magnet block I to the next following magnet block II the conglomerate of metal scrap shortly is unsettled, that enables non-magnetic material to get off from magnetic materials and to fall into a collection bin. This process can only occur if the relation of the poles from successively following magnets I chosen in such a way, that a north-pole is followed by a north-pole and a south-pole is followed by another south-pole. This process is as often as necessary repeated to purify magnetic material from non-magnetic stuff. The number (n) of successively following magnet-blocks (m) is only guided by the desired level of purity of the magnetic materials. The non-magnetic transportation belt (2) runs at both ends over rotary wheels (pulleys) (12) one of them may at least be equipped with an electrical drive, the revolution of which may be controlled. Driving forces transmitted to the non-magnetic belt originate at least from an electrical drive. In order to further improve separation of non-magnetic stuff from magnetic material the magnet blocks (m) are equipped with vibration elements (9).

Bibliographic data

1 Conveyer belt
2 Transportation facility
3 Magnet bloc I
4 Magnet block II
5 Conglomerate of metal scrap
6 Scrap of iron (purified)
7 Collection bin
8 Vibration device
9 Collection bin for iron
10 Naps and further humps
11 Pulleys (equipped with an electrical drive)
12 Number of blocks of magnets

Claims

Claim 1

Process for dry purifying of a conglomerate of metal scrap from non-magnetic stuff by using an equipment consisting of a plurality of magnets in row over a conveyer belt, while the scrap in a first step is comminuted by a shredder or by a hammer mill which are fed by a conveyer facility, the belt of which is rugged on the side showing to the conglomerate, that transports the conglomerate of metal scrap from a first magnet to successively in a row following further magnets in the direction of transport, characterized in the fact that the sequence of the poles of all magnets arranged in a row is chosen in that way that a north-pole is followed by a north-pole and a south-pole is followed by a south-pole of the next following magnet in transportation direction.

Claim 2

Device for execution of the process of claim 1, that a conveyer belt (1) delivers by a shredder or hammer mill pre-comminuted conglomerate (5) of metal scrap to a non-magnetic conveyer belt of an equipment that is equipped with a plurality of magnets placed in row between a lower and upper part of the belt in transportation direction that show with their pole sides towards the lower part of the belt, the poles of the magnets are arranged in that way that a north-pole is followed by a north-pole and a south-pole by a south-pole of each next following magnet.

Claim 3

Device according to claim 2 that the transportation belt (2) is equipped at the side which shows towards the metal scrap (5) with napes or humps (11) or similar embodiments that create a rugged surface.

Claim 4

Device according to one of the claims 2 and 3 characterized in that magnet blocs (14) and / or pulleys (12), at least one of them being equipped with an electrical drive for the non-magnetic transportation belt (2) and that at the end of the non-magnetic transportation belt (2) a vibration element is installed.

Claim 5

Device according to one of the claims 2 to 4 characterized in that when using electrical magnets for the magnet blocs (14) an electrical control device is installed that controls the activation of the magnets in that way that when a preceding magnet is inactive the next following magnet is activated.

Claim 6

Device according to one of the preceding claims 2 to 5 characterized in the non-magnetic conveyor belt (2) of an over-belt magnetic installation is guided at both ends by at least two guide rollers (12), one of them is at least transmitting driving forces to the non-magnetic conveyor belt delivered by a controllable electrical drive and that in addition is equipped with a vibration installation (9) in order to make vibrating the whole non-magnetic conveyor belt.

Claim 7

Device according to one of the preceding claims characterized in that nozzles, the openings of which are directed towards the magnet blocs that adhere the conglomerate of metal scrap, and blow a gas or liquid stream under pressure towards the conglomerate of metal scrap, in order to blow off or wash out non-magnetic particles that adhere to the scrap.

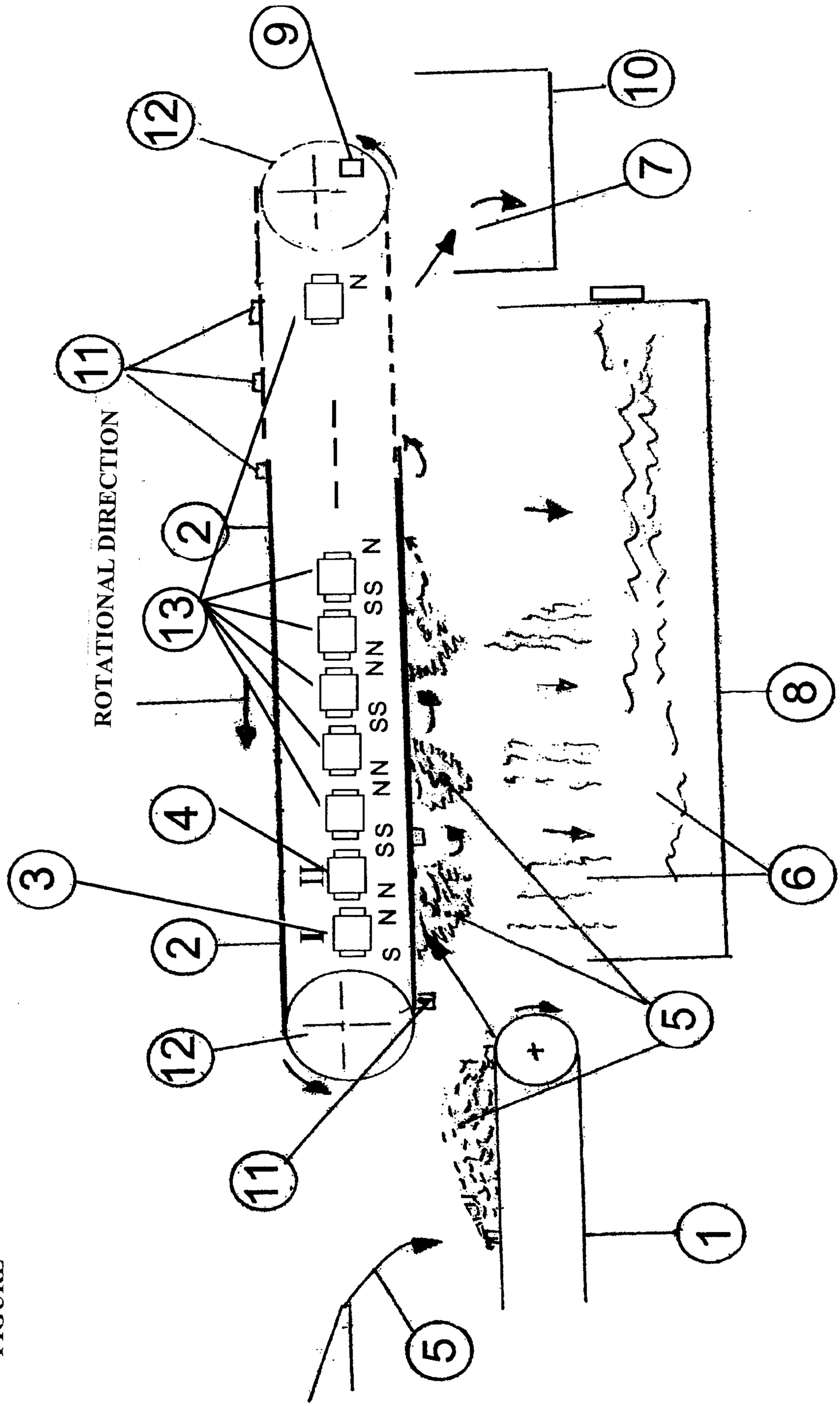
6
12
10
7
11
N
2
13
ROTATIONAL DIRECTION
SS NN SS N
4
3
II
SS NN SS N
I
2
12
11
8
6
5
+
5
1

FIGURE

FIGUR

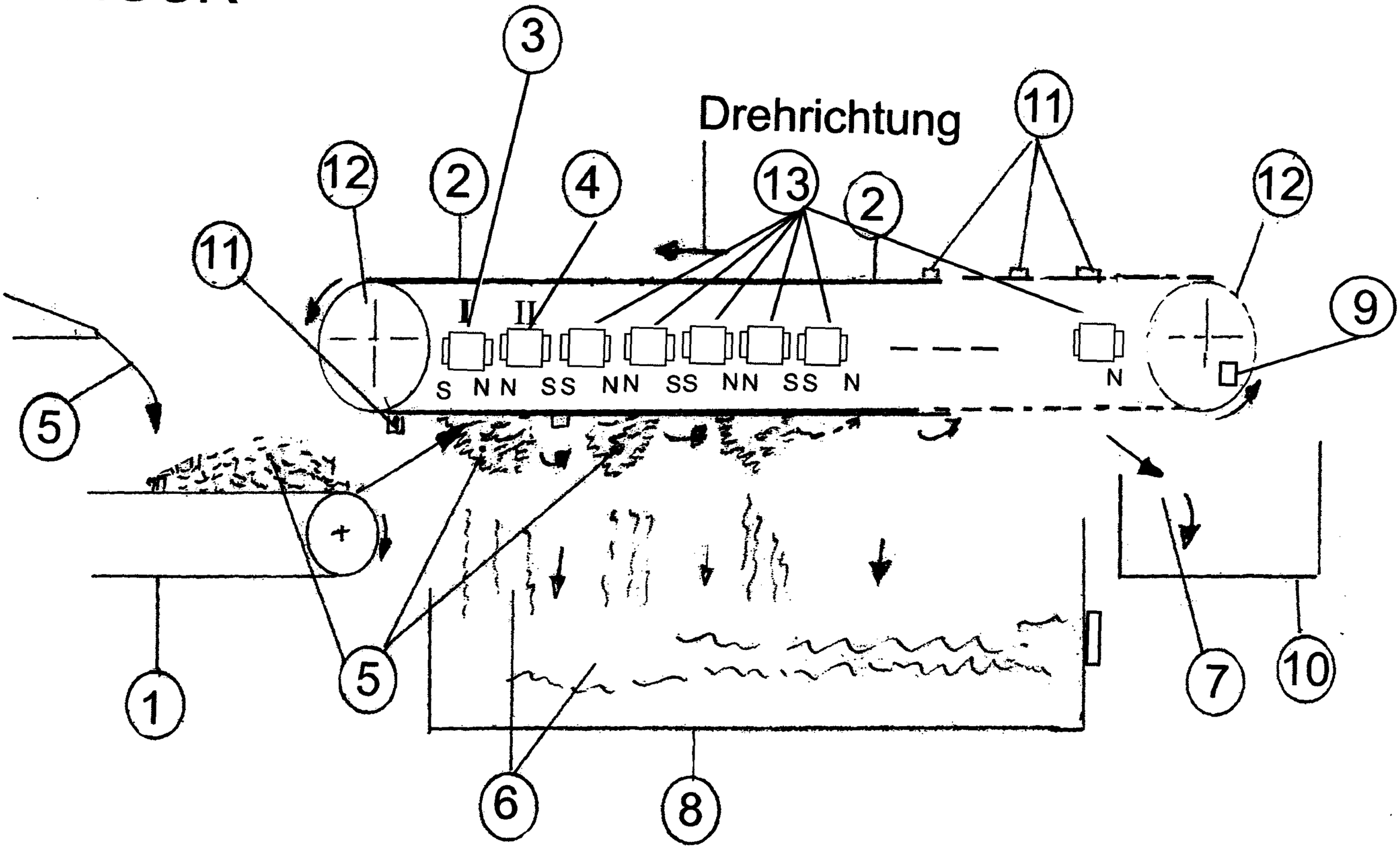

13 ... rotational direction