No. 796,040. PATENTED AUG. 1, 1905.

T. DUNCAN.

ELECTRIC METER.

APPLICATION FILED JULY 11, 1901.

2 SHEETS—SHEET 1.

Fig. 1.

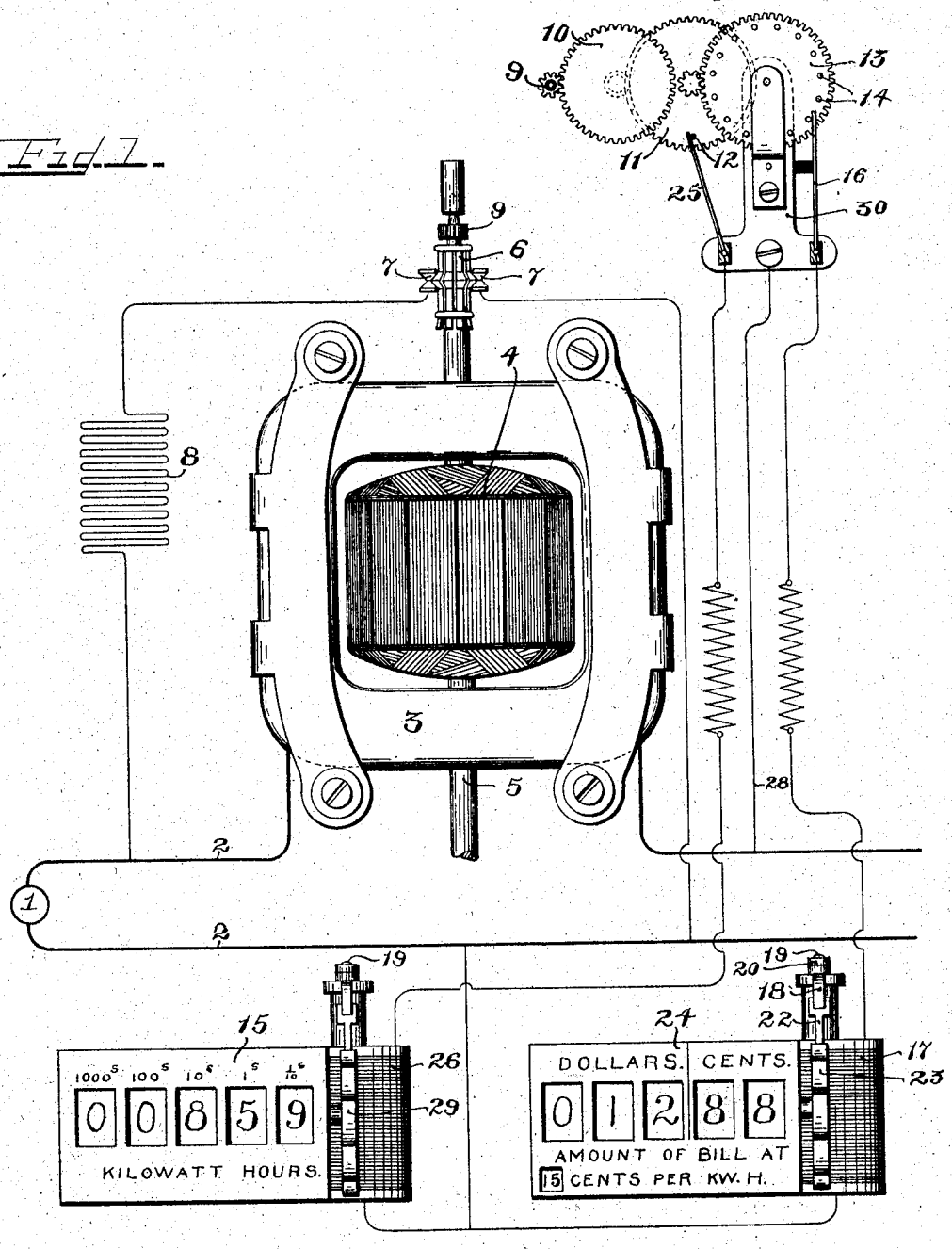

Witnesses.
May W. Gabil.
Harvey L. Hanson.

Inventor
Thomas Duncan
By Charles A. Brown Cragg & Belfield
Attorneys.

ANDREW B. GRAHAM CO., PHOTO-LITHOGRAPHERS, WASHINGTON, D. C.

No. 796,040. PATENTED AUG. 1, 1905.

T. DUNCAN.

ELECTRIC METER.

APPLICATION FILED JULY 11, 1901.

2 SHEETS—SHEET 2.

Fig. 3

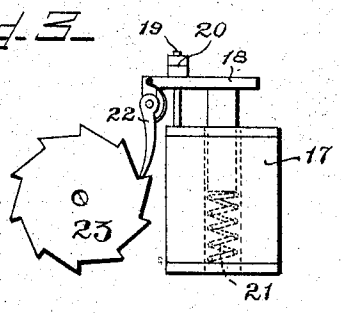

Fig. 2

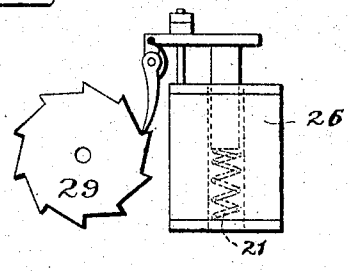

Fig. 4

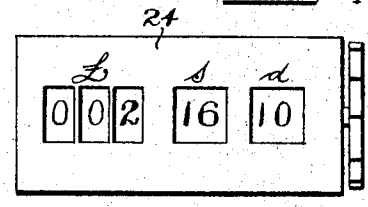

Fig. 5

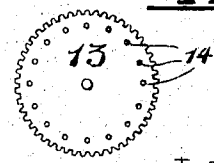

Witnesses
May A. Label.
Harvey L. Hanson.

Inventor
THOMAS DUNCAN
By Charles A. Brown Cragg & Pelfield
Attorneys

ANDREW B. GRAHAM CO. PHOTO-LITHOGRAPHERS, WASHINGTON, D. C.

UNITED STATES PATENT OFFICE.

THOMAS DUNCAN, OF CHICAGO, ILLINOIS, ASSIGNOR TO DUNCAN ELECTRIC MANUFACTURING COMPANY, OF LAFAYETTE, INDIANA.

ELECTRIC METER.

No. 796,040. Specification of Letters Patent. Patented Aug. 1, 1905.

Application filed July 11, 1901. Serial No. 67,816.

To all whom it may concern:

Be it known that I, THOMAS DUNCAN, a citizen of the United States, residing at Chicago, in the county of Cook and State of Illinois, have invented a certain new and useful Improvement in Electric Meters, of which the following is a full, clear, concise, and exact description, reference being had to the accompanying drawings, forming a part of this specification.

My invention relates to meters, and primarily to motor-meters wherein integrating counting mechanisms are employed for measuring the load or energy.

My invention has for its prime object the provision of means whereby a motor-meter whose rotating element moves uniformly in one direction may be employed to effect the electrical operation of the counting mechanism as contradistinguished from the well-known and hitherto universally-employed meter wherein the counting mechanism is mounted upon the same frame with the meter and is mechanically operated by engagement with the rotating element.

By means of my invention I am enabled to provide a meter wherein the motor part of the meter may be located in any suitable location, while the counting mechanism may be located elsewhere. Thus the bulky part of the structure may be placed in some obscure location, where it need not necessarily be readily accessible, while the reading-dials may be located where desired, as when the counting mechanism is neatly constructed it may be somewhat decorative and located in libraries, offices, and other well-appointed rooms, where such mechanism dissociated from the motor mechanism will not be objectionable.

Another feature of my invention consists in providing two counting mechanisms, one of which may have its rate of operation per unit of load or energy fixed, while the other may have its rate of operation per unit of load or energy adjustable according to the price that is to be charged for the energy used, whereby the consumer may compare one reading with the other. These counting mechanisms are both preferably operated through the agency of electromagnetic means that are intermittently actuated by means of switching mechanism operated through the agency of the rotating element of the meter, the current for effecting the actuation of the electromagnetic means being preferably obtained from the distribution-circuit. In practicing these features of my invention I preferably employ a train of mechanism that is geared with the shaft of the meter, the wheels of the mechanism being provided with switching-pins or parts that are suitably connected with the transmission-mains and which by periodic engagement with contact-brushes serve to complete the circuit through the electromagnetic means controlling the counting mechanism, that may be located at a point distant from the motor mechanism, the conductors that engage the brushes and the pins forming the only operative connection between the motor mechanism and the electromagnets controlling the counting mechanism. Each counting mechanism preferably includes a counting-train and dials, upon one of which the amount of energy or load may be indicated, while upon the other the cost of the load or energy is indicated. Electromagnetic mechanism, preferably of identical construction, is employed for operating each counting mechanism. A ratchet-wheel is preferably connected with each counting-train, with which ratchet-wheel a pawl carried by the core of each solenoid (which is the form that I prefer to construct the electromagnetic mechanism in) engages, the solenoid-core being periodically attracted by the corresponding solenoid-helix, as circuit is closed through the same at the motor mechanism.

I prefer to employ one of the wheels of the train mechanically operated by the motor mechanism for effecting the energization of one of the solenoids and another wheel for effecting the energization of the remaining solenoid. The wheel that controls the energization of the solenoid governing the operation of the counting mechanism that indicates the monetary equivalent of the load is preferably provided with a series of pins corresponding to the cost of the current, this wheel being preferably removably mounted in its bearings, so that other wheels with differing numbers of pins corresponding to different costs may be substituted, or, if preferred, the pins in this wheel may be removably secured in place, so that they may be removed or added to the wheel in accordance with the cost to be charged to the particular customer.

I will explain my invention more fully by

reference to the accompanying drawings, in which—

Figure 1 is a view of the motor mechanism of a commutated motor-meter, the damping-magnets and disk being removed, as these are well understood in the art, a system of power distribution being indicated, while the mechanically-actuated train of wheels is shown in plan and in electrical association with the counting mechanisms. Fig. 2 is an elevation of the electromagnetic mechanism for controlling the operation of that counting mechanism that is operated at a uniform rate per unit of load or energy. Fig. 3 is a view of the electromagnetic mechanism that controls the operation of the counting mechanism that measures the load or energy by its monetary equivalent. Fig. 4 is a view illustrating a measuring mechanism marked in monetary equivalents of other than United States money. Fig. 5 indicates a value-wheel differing from that entering into the construction of Fig. 1.

Like parts are indicated by similar characters of reference throughout the different figures.

While I have shown a commutated motor-meter, I do not wish to be limited in all the embodiments of my invention to this form of meter, as the invention may be practiced with other forms of meter.

In Fig. 1 I have illustrated a generator 1, supplying current to transmission-mains 2 2, that may supply translating devices. The motor element of a commutated motor-meter is illustrated, wherein a field-winding 3 is shown as being connected in series with one of the transmission-mains 2. An armature-winding 4 is mounted upon a rotatable shaft 5, the armature-winding being preferably provided with a commutator 6, with which commutator-brushes 7 7 engage to connect the armature in bridge of the transmission-mains, a resistance 8 being preferably employed for reducing the current in the armature sufficiently. The shaft of the meter is provided with a pinion 9, (insulated from the shaft by an insulating-bushing,) which drives the wheel 10. This wheel 10 drives the wheel 11, upon which is secured a contact-pin 12. The wheel 11 drives the wheel 13, upon which are secured in this instance fifteen contact-pins 14, the number of contact-pins upon the wheel 13 corresponding to the charge per kilowatt-hour, the number of pins preferably being equal to the number of cents charged per kilowatt-hour. In the present instance, there being fifteen pins, the rate is fifteen cents per kilowatt-hour.

A standard meter makes one revolution per watt-hour—*i. e.*, one revolution in one hour on one watt—or, as tested commercially, makes one revolution per minute on sixty watts. Since a kilowatt-hour is one thousand watt-hours and the meter makes one revolution per watt-hour, then the spindle or shaft 5 will make one thousand revolutions before the energy or load-dial and counting mechanism 15 (when marked as shown) will record one kilowatt-hour. The wheels 9, 10, 11, and 13 are preferably made so that while the spindle 5 makes one thousand revolutions the wheel 13 will make only one revolution. As the value-wheel 13 makes one revolution each of its fifteen pins 14, in this instance, has made contact with a brush 16. The wheel 13 is connected with one of the mains 2, while the contact-brush 16 is connected with the other main through the helix of the electromagnet or solenoid 17, so that this solenoid attracts its core fifteen times during each complete revolution of the wheel 13. The solenoid-core for this purpose is preferably provided with an arm 18, through which is passed a guiding-rod 19, provided with stops 20, against which the arm is thrust by a coiled spring 21 when there is no current in the helix. The solenoid-core is attracted against the force of the coiled spring when circuit through the helix of the solenoid is closed, whereupon the pawl 22 forces the wheel 23 around a sufficient distance to operate the counting mechanism 24 sufficiently to increase the reading of the units of cents one unit. Upon a complete revolution of the wheel 13 the reading at the units and tens-of-cents dials is increased fifteen cents. Thus as each kilowatt-hour is consumed fifteen cents is added to the reading of the instrument 24. For example, if eighty-five and thirteen-fifteenths kilowatt-hours have been consumed the dial 24 will record "$12.88."

Since it is customary to have dials indicate tenths of a kilowatt-hour, I have put the pin 12 on the wheel 11, which pin and wheel control the operation of the energy-dial 15. The wheel 11 makes ten revolutions for one of the wheel 13 and registers ten-tenths, or one kilowatt-hour. Each time the wheel 11 makes one revolution the pin 12 is brought into contact with the brush 25, that is connected with one of the transmission-mains through the helix of an electromagnet 26, the wheel 11, as well as the wheel 13, having connection through a conductor 28 common to the said wheels with the remaining transmission-main. One revolution of the wheel 11 indicates one-tenth of a kilowatt-hour, manifested upon the space at the extreme right of the dial 15. Ten revolutions of the wheel 11, corresponding to one kilowatt-hour, will cause an additional unit to be added to the reading in the space next to that on the extreme right.

The electromagnetic mechanism for controlling the operation of the counting mechanism actuating the indicators upon the dial 15 is similar to that which I have described in connection with the dial 24, and I will therefore not repeat a description thereof. The counting mechanism may be of any well-known form suitably coupled with the wheels 23 and 29,

and I do not, therefore, deem an illustration thereof to be essential.

In the lower corner of the dial 24 may be located a space in which may be inserted a card bearing the rate to be charged the consumer for his service.

The value-wheel 13 may be either provided with contact-posts 14, that are removably secured thereto, or the wheel may be removably secured in a bearing 30, so that other value-wheels bearing a number of pins corresponding to the rate the consumer is to be charged may be inserted in place. For example, the wheel illustrated in Fig. 5, having sixteen pins, may be inserted when the consumer is to be charged sixteen cents per kilowatt-hour instead of fifteen cents.

While I have indicated the measurement upon the reading-scales in figures of currency, it is obvious that the monetary equivalent may otherwise be indicated or understood from the operation of the dial mechanism 24.

It will be seen that I have devised a construction where the switch that controls the electromagnet is extraneous to, electrically independent of, and mechanically actuated by, the rotating motor of the meter.

I do not wish to be limited to the use of supplemental counting mechanisms in connection with electric meters, as they may be employed with other forms of meters.

While I have herein shown and particularly described the preferred embodiment of my invention, it is obvious that changes may readily be made without departing from the spirit thereof, and I do not, therefore, wish to be limited to the precise disclosure herein set forth; but,

Having thus described my invention, I claim as new and desire to secure by Letters Patent—

1. The combination with the motor of a meter whose rotating element travels continuously in one direction, of counting mechanism for recording the load or energy in a working circuit, electromagnetic mechanism for operating the counting mechanism, interchangeable value-wheels operated by the rotating element of the motor, and a switch, said value-wheels being of different character and each serving to operate the switch intermittently to close circuit through the electromagnetic mechanism, intermittently to actuate the counting mechanism a number of times corresponding to the particular value-wheel, the value-wheels serving to operate the counting mechanism during one revolution a differing number of times to correspond with the rate the consumer is charged, substantially as described.

2. The combination with the motor of a meter, of counting mechanism for recording the load or energy in a working circuit, electromagnetic mechanism for operating the counting mechanism, interchangeable value-wheels operated by the rotating element of the motor, and a switch, said value-wheels being of different character and each serving to operate the switch intermittently to close circuit through the electromagnetic mechanism, intermittently to actuate the counting mechanism a number of times corresponding to the particular value-wheel, the value-wheels serving to operate the counting mechanism during one revolution a differing number of times to correspond with the rate the consumer is charged, substantially as described.

3. The combination with an electric meter, of two counting mechanisms, one serving to register the energy or load at a uniform rate per unit of load or energy, while the other serves to register the monetary equivalent of the load or energy at a rate per unit of load or energy corresponding to the cost thereof, electromagnetic means serving to effect a step-by-step operation of the counting mechanisms, and switching means interposed between the rotating element of the meter and said electromagnetic means for effecting the energization of the electromagnetic means to effect the step-by-step operation of the counting mechanisms, substantially as described.

4. The combination with the rotating element of a meter, of a counting mechanism, a solenoid and an arm projecting therefrom, a guide engaging the arm to direct the same in rectilineal travel, a spring engaging the core to force the same away from the helix, a stop limiting the thrust of the spring, a pawl carried by the arm, a step-by-step wheel engaging the counting mechanism actuated by the pawl upon each energization of the solenoid, and switching mechanism controlled by the rotating element of the meter for intermittently energizing the solenoid, substantially as described.

5. The combination with the rotating element of a meter, of two counting mechanisms operated thereby one for indicating energy consumed and the other for indicating cost, and electromagnetic means governed by the rotating element of the meter serving to operate the said counting mechanisms, substantially as described.

In witness whereof I hereunto subscribe my name this 3d day of June, A. D. 1901.

THOMAS DUNCAN.

Witnesses:
GEORGE L. CRAGG,
HERBERT F. OBERGFELL.