3 Sheets—Sheet 1.

H. BRAUNHOLD.

MACHINES FOR POLISHING PAPER, &c.

No. 194,214. Patented Aug. 14, 1877

Fig. 1.

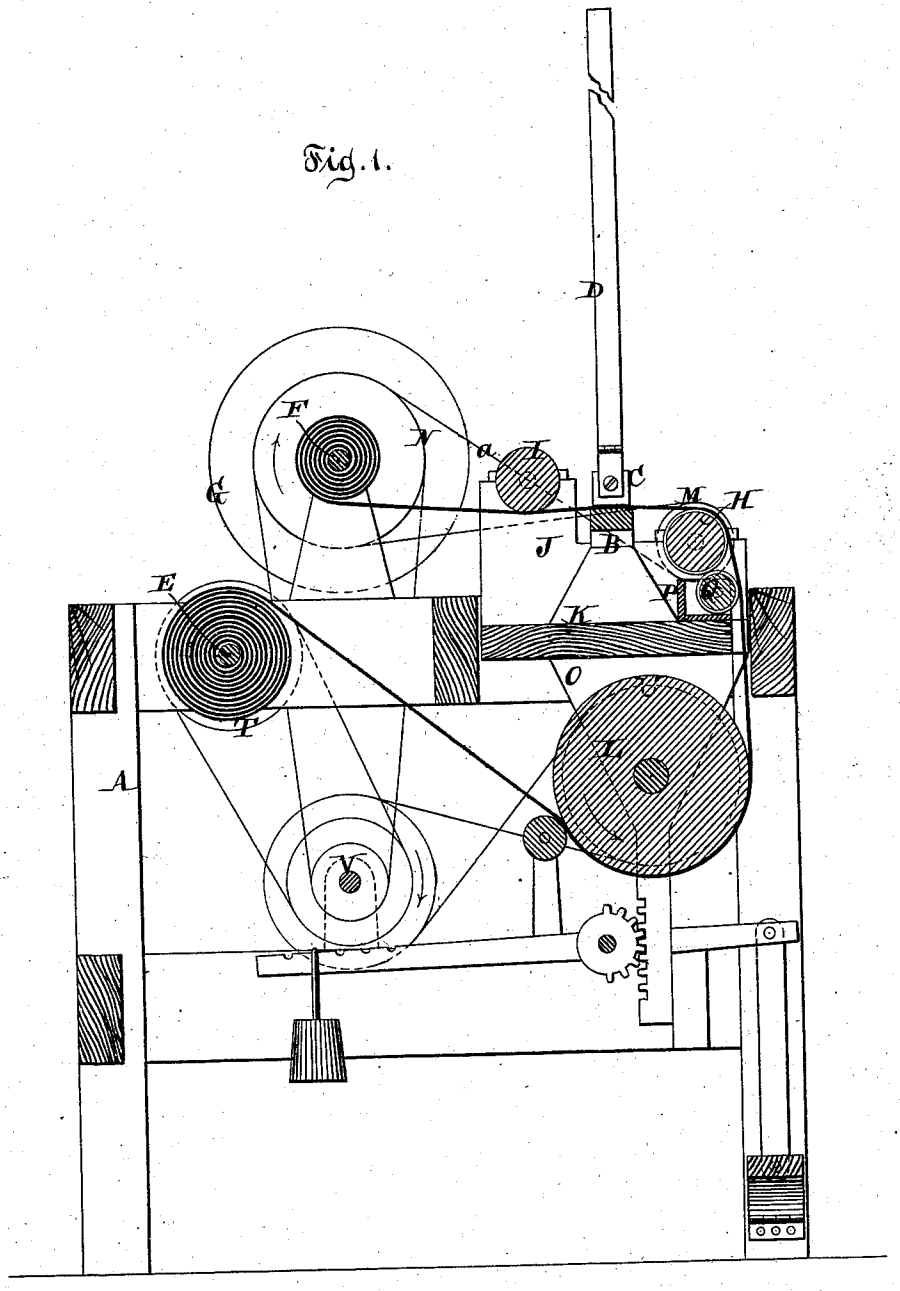

Witnesses.

Otto Schupland

Hugo Brueggemann

Inventor.

Henry Braunhold

by

Sanford & Hauff

his attorneys.

N. PETERS, PHOTO-LITHOGRAPHER, WASHINGTON, D. C.

3 Sheets—Sheet 2.

H. BRAUNHOLD.

MACHINES FOR POLISHING PAPER, &c.

No. 194,214. Patented Aug. 14, 1877.

Fig. 2.

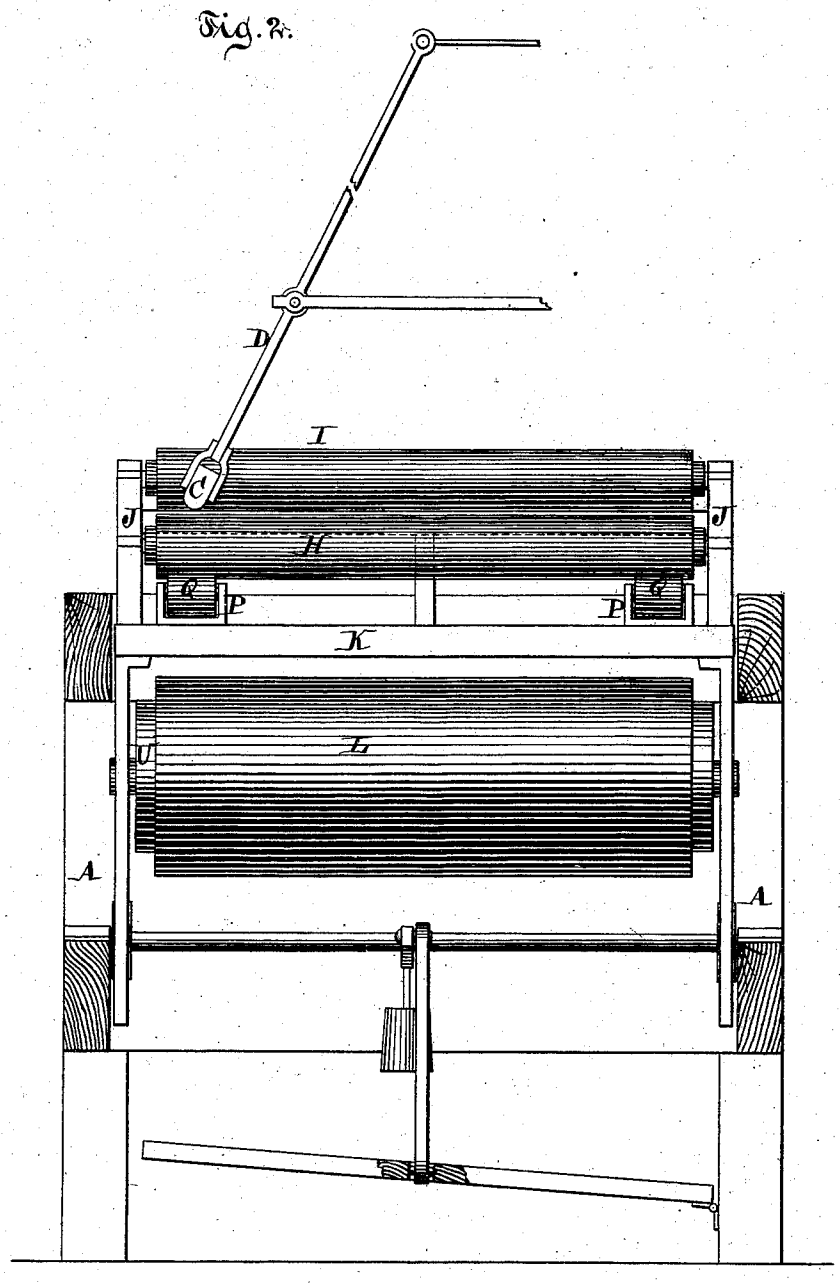

Witnesses.

Otto Hufland

Hugo Bruggemann

Inventor.

Henry Braunhold

by Van Santvoord & Hauff

his attorneys.

N. PETERS, PHOTO-LITHOGRAPHER, WASHINGTON, D. C.

3 Sheets—Sheet 3.

H. BRAUNHOLD.

MACHINES FOR POLISHING PAPER, &c.

No. 194,214. Patented Aug. 14, 1877.

Fig. 3.

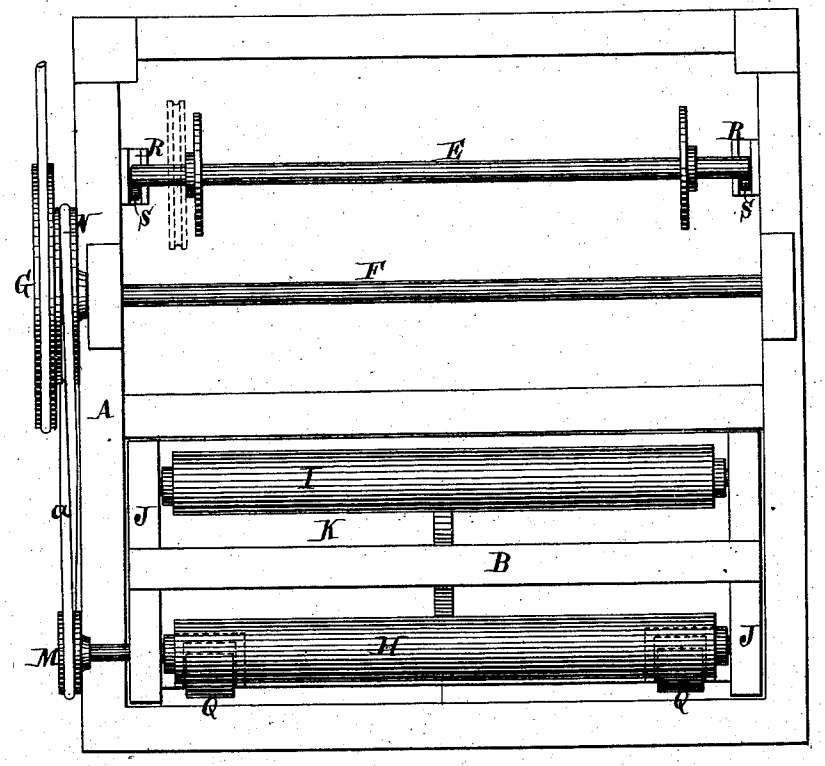

Fig. 4.

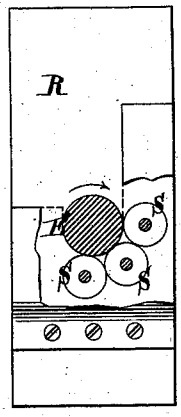

Witnesses.
Otto Stupeland
Hugo Brueggemann

Inventor.
Henry Braunhold
by
Van Santvoord & Hauff
his attorneys

N. PETERS, PHOTO-LITHOGRAPHER, WASHINGTON, D. C.

UNITED STATES PATENT OFFICE.

HENRY BRAUNHOLD, OF NEW YORK, N. Y.

IMPROVEMENT IN MACHINES FOR POLISHING PAPER, &c.

Specification forming part of Letters Patent No. **194,214**, dated August 14, 1877; application filed January 13, 1877.

To all whom it may concern:

Be it known that I, HENRY BRAUNHOLD, of the city, county, and State of New York, have invented a new and useful Improvement in Machines for Polishing Paper and other Materials, which improvement is fully set forth in the following specification, reference being had to the accompanying drawing, in which—

Figure 1 represents a longitudinal vertical section of a polishing-machine containing my improvement. Fig. 2 is a cross-section thereof. Fig. 3 is a plan or top view of the same. Fig. 4 is a front view of one of the brackets for supporting the feed-shaft.

Similar letters indicate corresponding parts.

My improvement relates to that class of polishing-machines in which the paper or other material is subjected to the action of an oscillating polishing-tool, which is arranged over a bed, over which the material is caused to pass, the material being taken from a roll on one shaft in its unpolished state, and wound on another shaft as it is polished.

The improvements consist of a novel combination and arrangement, which will be fully hereinafter described, and a preliminary explanation is therefore deemed unnecessary.

In the drawing, the letter A designates the frame of my machine, and B is the bed over which swings the polishing tool or stone C, the latter being secured to a rod, D, which is pivoted at its upper end, in the usual way. E is the shaft which feeds or carries the roll of paper or other material to be polished, and F is the shaft which takes it up after it is polished. The take-up shaft F is provided with a pulley, G, which is connected by a suitable band with a driving-shaft.

The letters H I designate two rollers, arranged, respectively, on opposite sides of the bed B, and which have their bearings in rails J, secured to a yielding table, K, to which is secured also the bed B. These rollers H I are so disposed that if the material to be polished is caused to pass over the roller H and under the roller I, as shown in Fig. 1, it passes over the bed B nearly on a level therewith, and hence the material is not liable to be creased or torn by contact with the edges of the bed. To the shaft of the roller H is secured a pulley, M, which is connected by a belt, *a*, with a secondary pulley, N, mounted on the take-up shaft F.

The letter L designates a smoothing-roller, which is, preferably, made of large diameter, and which has its bearings in hangers O, secured to the yielding table K, the roller being situated under the table. If the material to be polished is caused to pass over or round this smoothing-roller L before it is conducted over the bed B, it is thereby freed of any wrinkles or unevenness that may exist therein.

The letter P designates two chalk-boxes, located in front of the bed B, and at or near the ends of the table K, in each of which boxes is mounted a spreading roller or brush, Q. These boxes P are intended to hold chalk, or any equivalent frictional material, in a moist state.

If the material to be polished is caused to pass over the spreading-rollers Q, and a frictional substance is placed in the boxes P, the latter is applied to the inner surface of the material by the spreading-rollers, and thus that portion of the material situated above the bed is caused to adhere thereto during the time the polishing-tool passes over it, and the material is not liable to be caught and torn by the polishing-tool.

The object of arranging the chalk-boxes at each end of the bed B is to have the substance applied only to the edges of the material where it is most liable to be caught and torn by the polishing-tool; but in some cases a single chalk-box is used, which is made of equal length to the bed B, so as to coat the entire surface of the material.

The feed-shaft E has its bearings in brackets R, (see Figs. 3 and 4,) which are each provided with a recess to receive anti-friction rolls S, these anti-friction rolls being so arranged that when the shaft E is put in place it rests on them, and thus the shaft is caused to revolve with great facility, and the material can be unwound therefrom by its being drawn out without danger of tearing it, even if thin or light material is used.

It will be noticed that the take-up shaft E is so arranged as to receive a positive motion, so that the material is automatically wound thereon as it is polished, and by the action of said take-up shaft, moreover, the material is

continuously drawn across the machine-bed, so that no attendance is required for this purpose, as in the old class of polishing-machines, an inexperienced person being enabled to take care of several of my machines without difficulty.

In some cases I mount a pulley, T, on the feed-shaft E, and provide the shaft of the smoothing-roller L with a pulley, U, so that said feed-shaft and smoothing-roller also have a positive motion, the pulleys T and U being connected to pulleys mounted on an independent shaft, V, which derives its motion from the take-up shaft F, as shown in Fig. 1.

The object of arranging the parts as last stated, and especially the smoothing-roller L, is to keep the material slack before it passes over the machine-bed, having found this advantageous in some kinds of work.

What I claim as new, and desire to secure by Letters Patent, is—

1. The shaft E, take-up shaft F, horizontal bed B, and polishing-tool C, in combination with the vertically-movable smoothing-roller L, hangers O, yielding table K, and upper and lower rollers H and I, the whole constructed for operation substantially as and for the purpose described.

2. The combination of boxes P and the spreading-rollers Q therein with the shaft H, revolving in contact with the rollers Q, and the bed B, tool C, shafts E and F, and smoothing-roller L, substantially as described.

In testimony that I claim the foregoing I have hereunto set my hand and seal this 10th day of January, 1877.

H. BRAUNHOLD. [L. S.]

Witnesses:
J. VAN SANTVOORD,
E. F. KASTENHUBER.