US 20200119829A1

(19) United States

(12) Patent Application Publication (10) Pub. No.: US 2020/0119829 A1

Chedore et al. (43) Pub. Date: Apr. 16, 2020

(54) **OPTIMIZED COLORLESS, DIRECTIONLESS, AND CONTENTIONLESS ROADM IN A MODULE**

(71) Applicant: **Ciena Corporation**, Hanover, MD (US)

(72) Inventors: **Paul Chedore**, Ottawa (CA); **Jean-Luc Archambault**, Ottawa (CA)

(21) Appl. No.: **16/161,165**

(22) Filed: **Oct. 16, 2018**

Publication Classification

(51) **Int. Cl.**

H04J 14/02 (2006.01)

H04Q 11/00 (2006.01)

(52) **U.S. Cl.**

CPC .. ***H04J 14/0212*** (2013.01); *H04Q 2011/0016* (2013.01); ***H04Q 11/0005*** (2013.01)

(57) **ABSTRACT**

A Reconfigurable Optical Add/Drop Multiplexer (ROADM) node with a Colorless, Directionless, and Contentionless (CDC) architecture, targeting smaller degree nodes, includes an integrated ROADM degree and add/drop module having M common input and output ports and N add/drop input and output ports, wherein the integrated ROADM degree and add/drop module is formed by an M×N demultiplexer Contentionless Wavelength Selective Switch (CWSS) and an M×N multiplexer CWSS; and X degree modules, each having an input and output port connected to common ports of the integrated ROADM degree and add/drop module, a first set of ports of the N add/drop input and output ports are connected for degree-to-degree connectivity and a second set of ports of the N add/drop input and output ports are utilized for local add/drop, such that the integrated module provides both the degree-to-degree connectivity and the local add/drop.

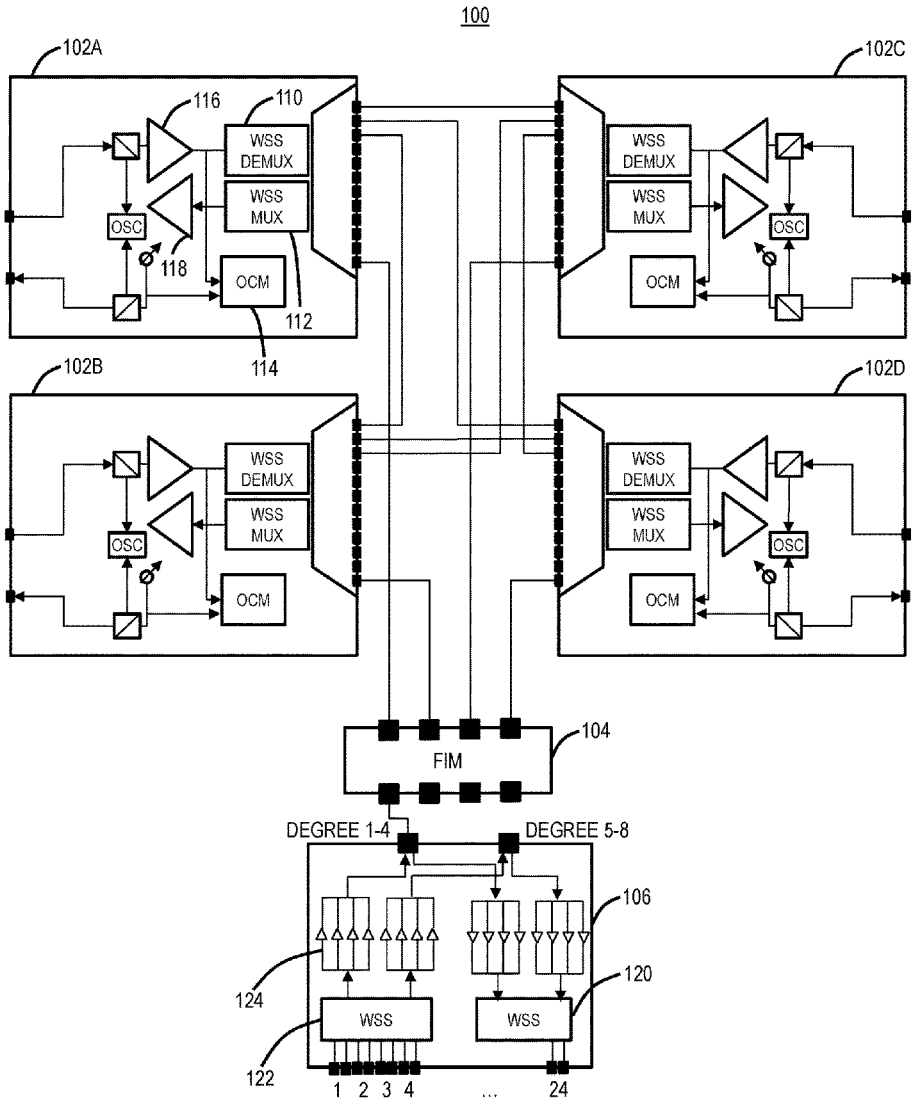

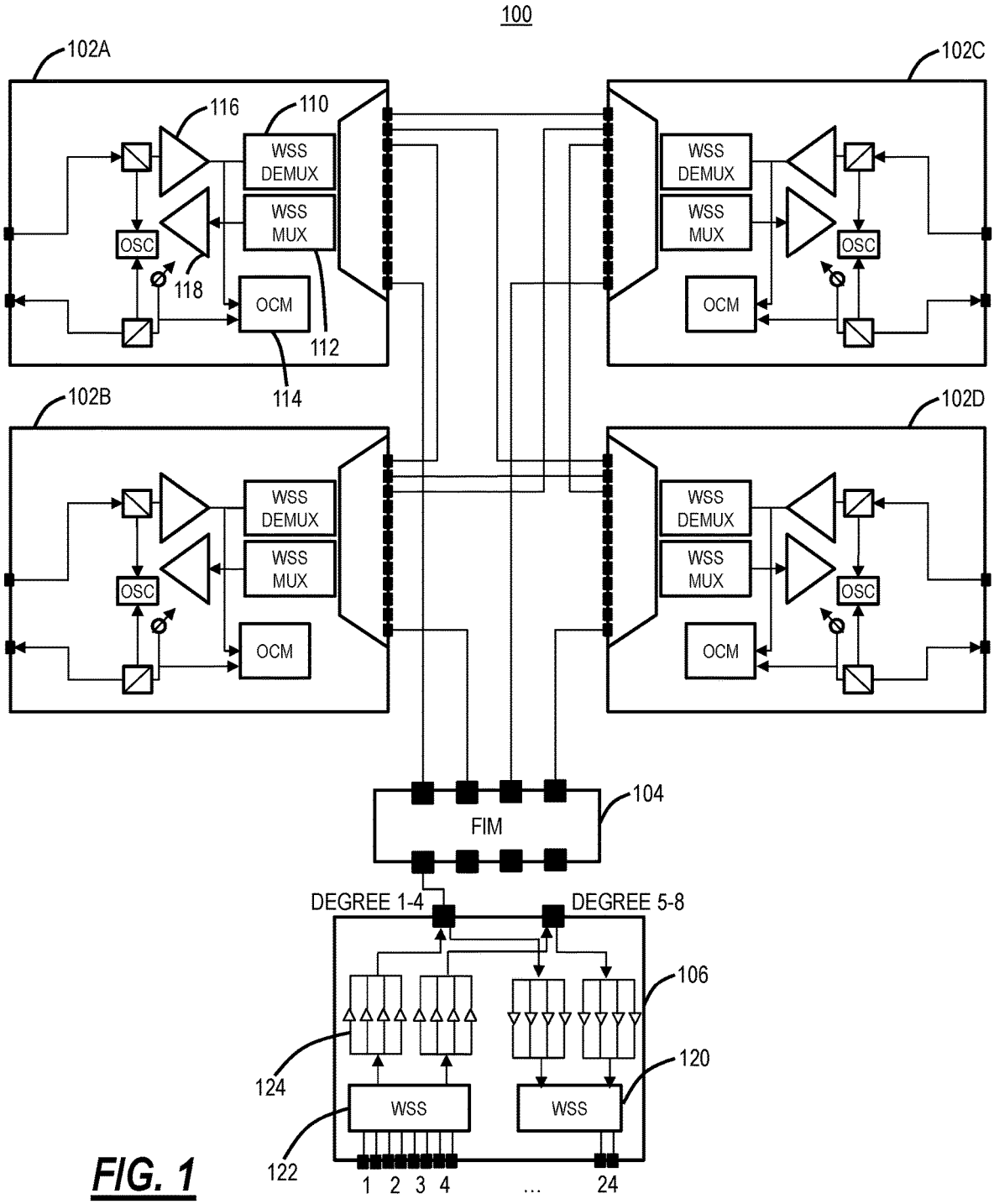
100
102A
102C
102B
102D
116
110
WSS DEMUX
WSS MUX
OSC
OCM
118
112
114
104
FIM
DEGREE 1-4
DEGREE 5-8
106
120
124
122
WSS
1 2 3 4
...
24

FIG. 1

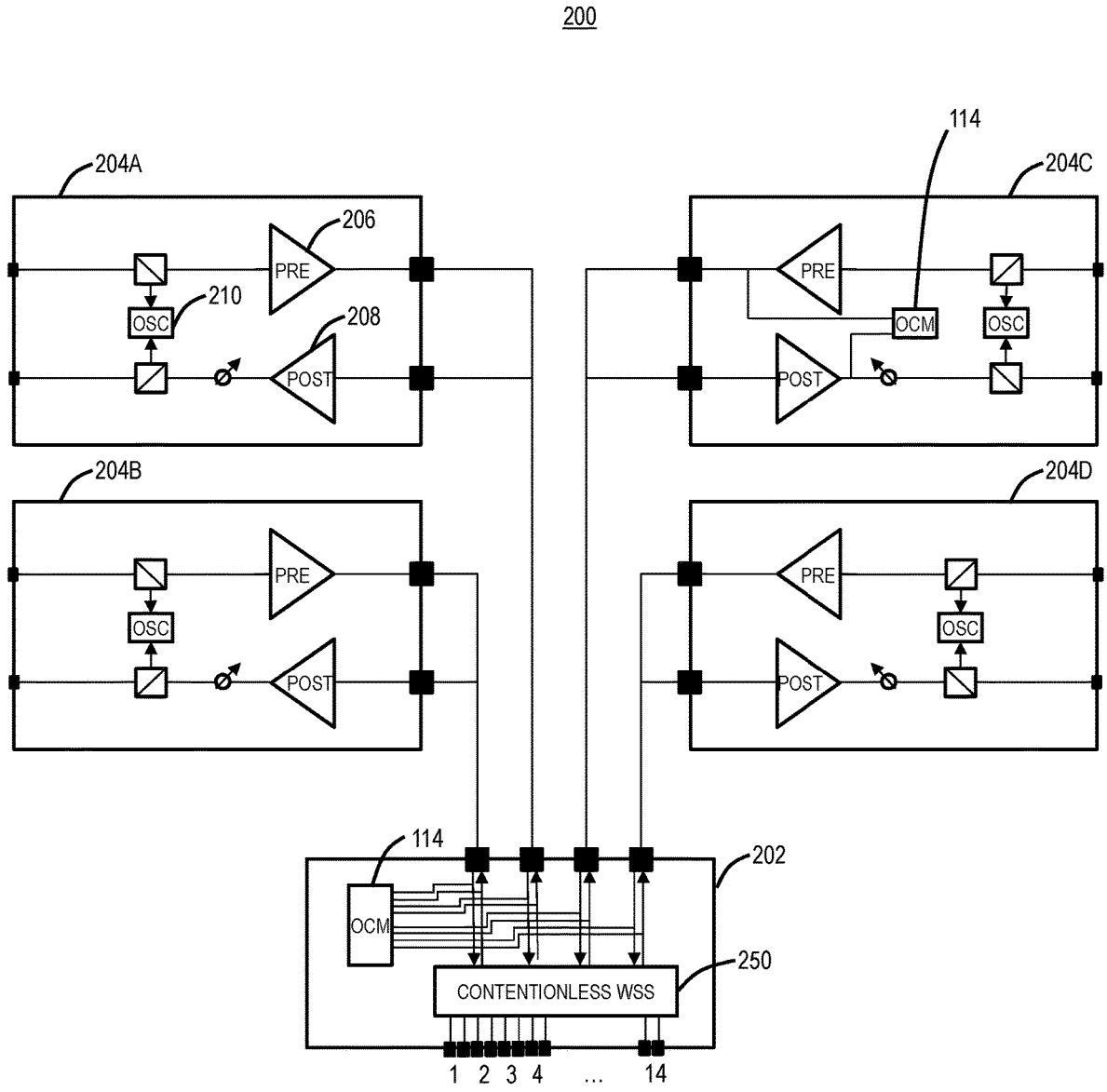
200
114
204A
204C
206
PRE
210
OSC
208
POST
OCM
204B
204D
114
202
250
CONTENTIONLESS WSS
1 2 3 4 ... 14

FIG. 2

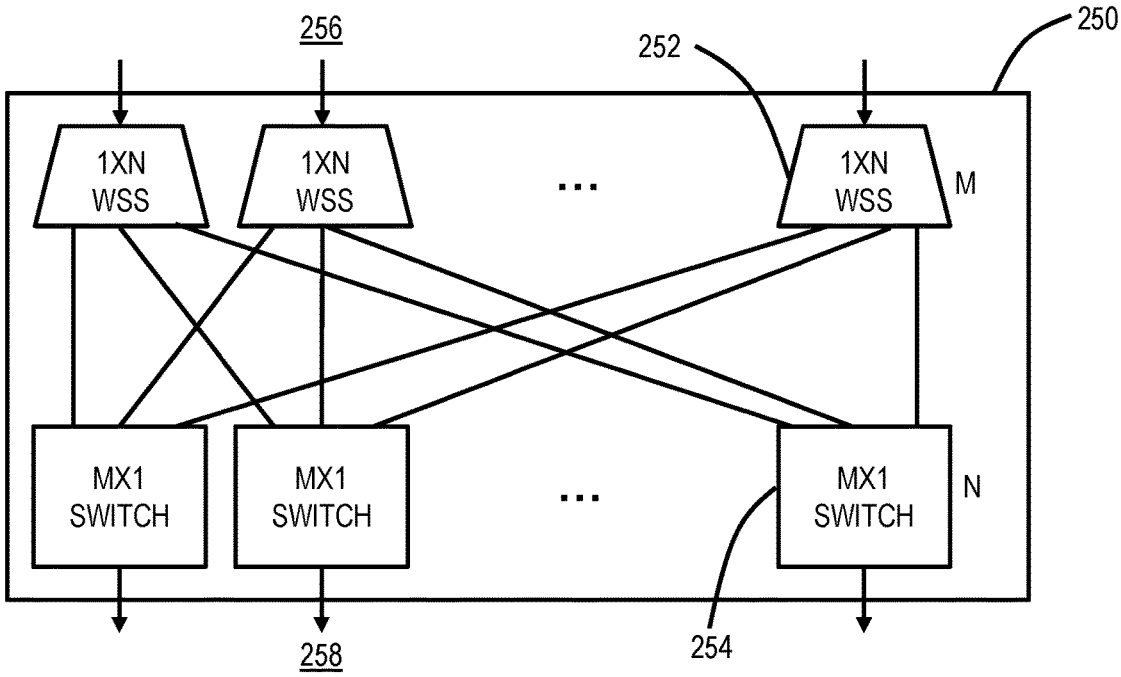
256
252
250
1XN WSS
1XN WSS
1XN WSS
M
MX1 SWITCH
MX1 SWITCH
MX1 SWITCH
N
254
258

FIG. 3

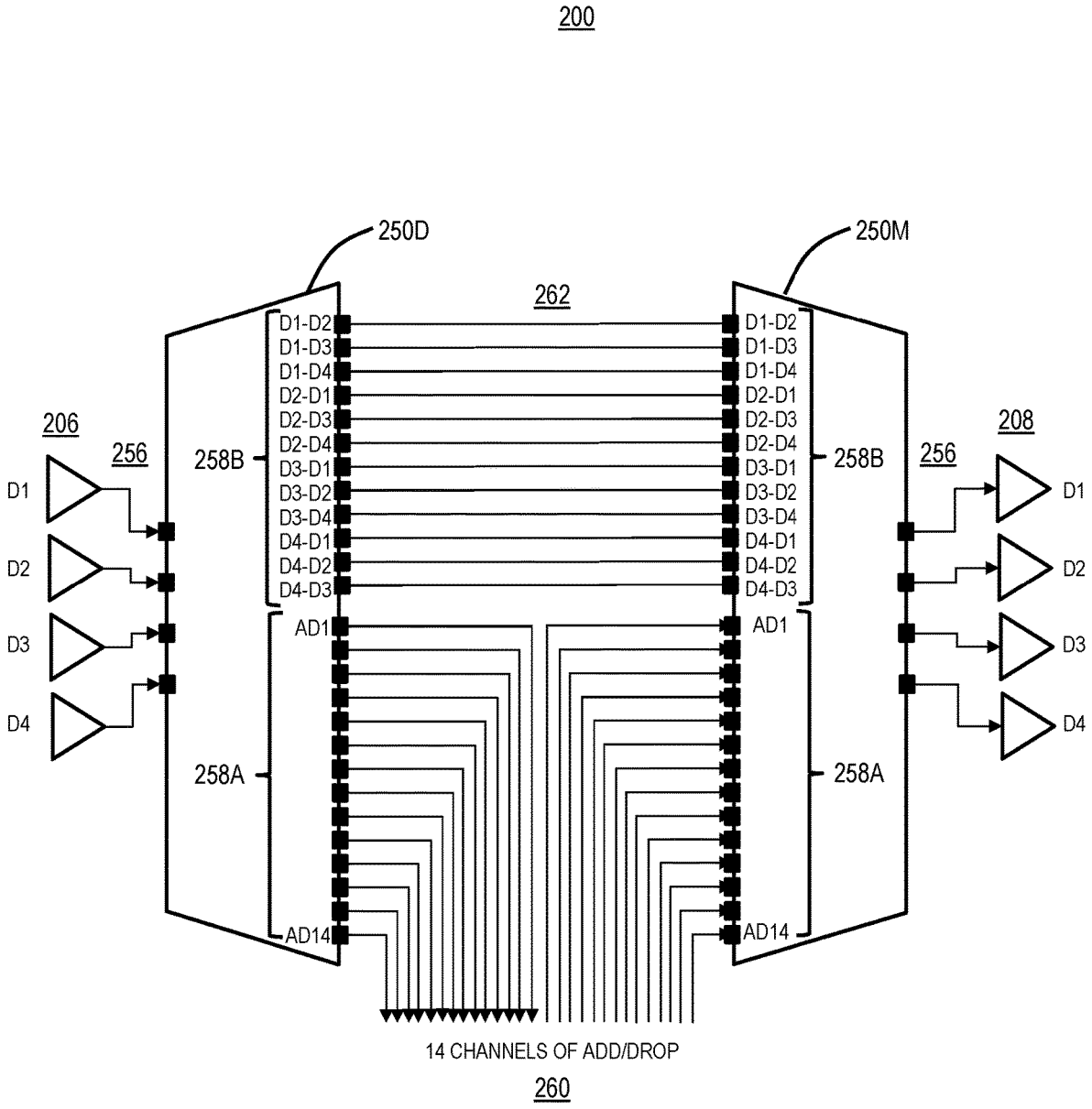
200
250D
250M
262
206
256
258B
D1
D2
D3
D4
D1-D2
D1-D3
D1-D4
D2-D1
D2-D3
D2-D4
D3-D1
D3-D2
D3-D4
D4-D1
D4-D2
D4-D3
AD1
AD14
258A
208
14 CHANNELS OF ADD/DROP
260

FIG. 4

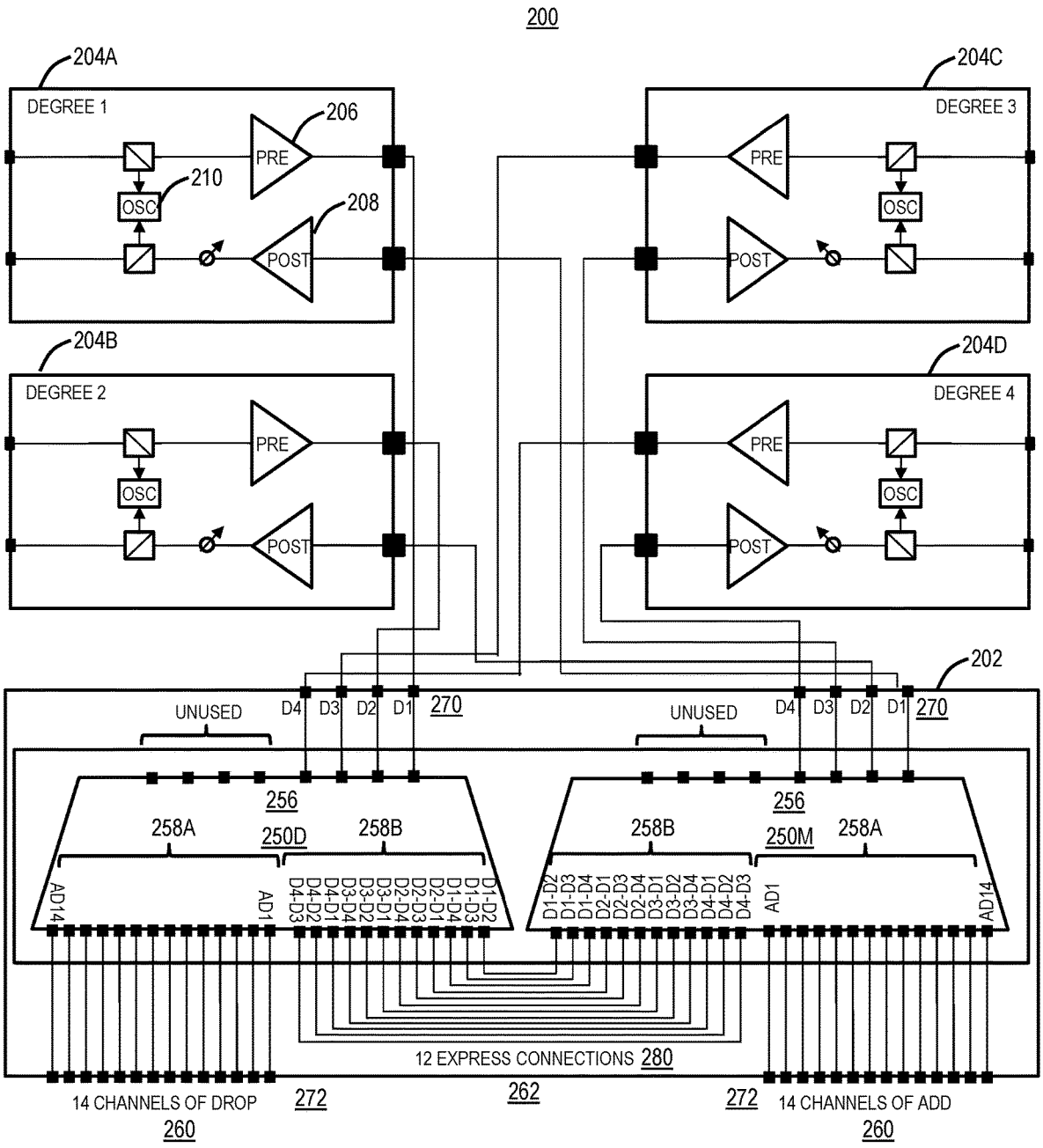
200
204A
DEGREE 1
206
PRE
210
OSC
208
POST
204C
DEGREE 3
204B
DEGREE 2
204D
DEGREE 4
202
UNUSED
D4 D3 D2 D1
270
256
258A
250D
258B
250M
AD14
AD1
D4-D3 D4-D2 D4-D1 D3-D4 D3-D2 D3-D1 D2-D4 D2-D3 D2-D1 D1-D4 D1-D3 D1-D2
D1-D2 D1-D3 D1-D4 D2-D1 D2-D3 D2-D4 D3-D1 D3-D2 D3-D4 D4-D1 D4-D2 D4-D3
12 EXPRESS CONNECTIONS 280
262
14 CHANNELS OF DROP
272
260
14 CHANNELS OF ADD

FIG. 5

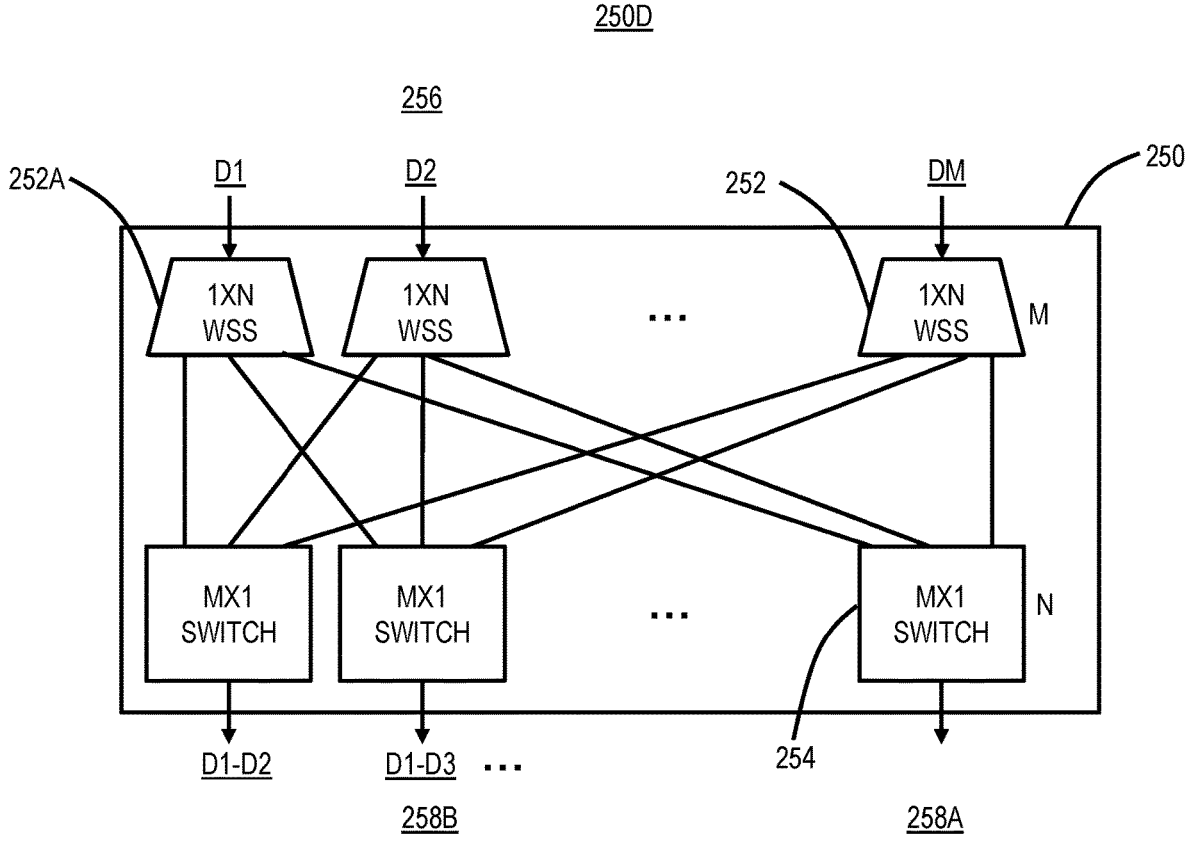
250D
256
252A
D1
D2
252
DM
250
1XN WSS
1XN WSS
1XN WSS
M
MX1 SWITCH
MX1 SWITCH
MX1 SWITCH
N
D1-D2
D1-D3
254
258B
258A

FIG. 6

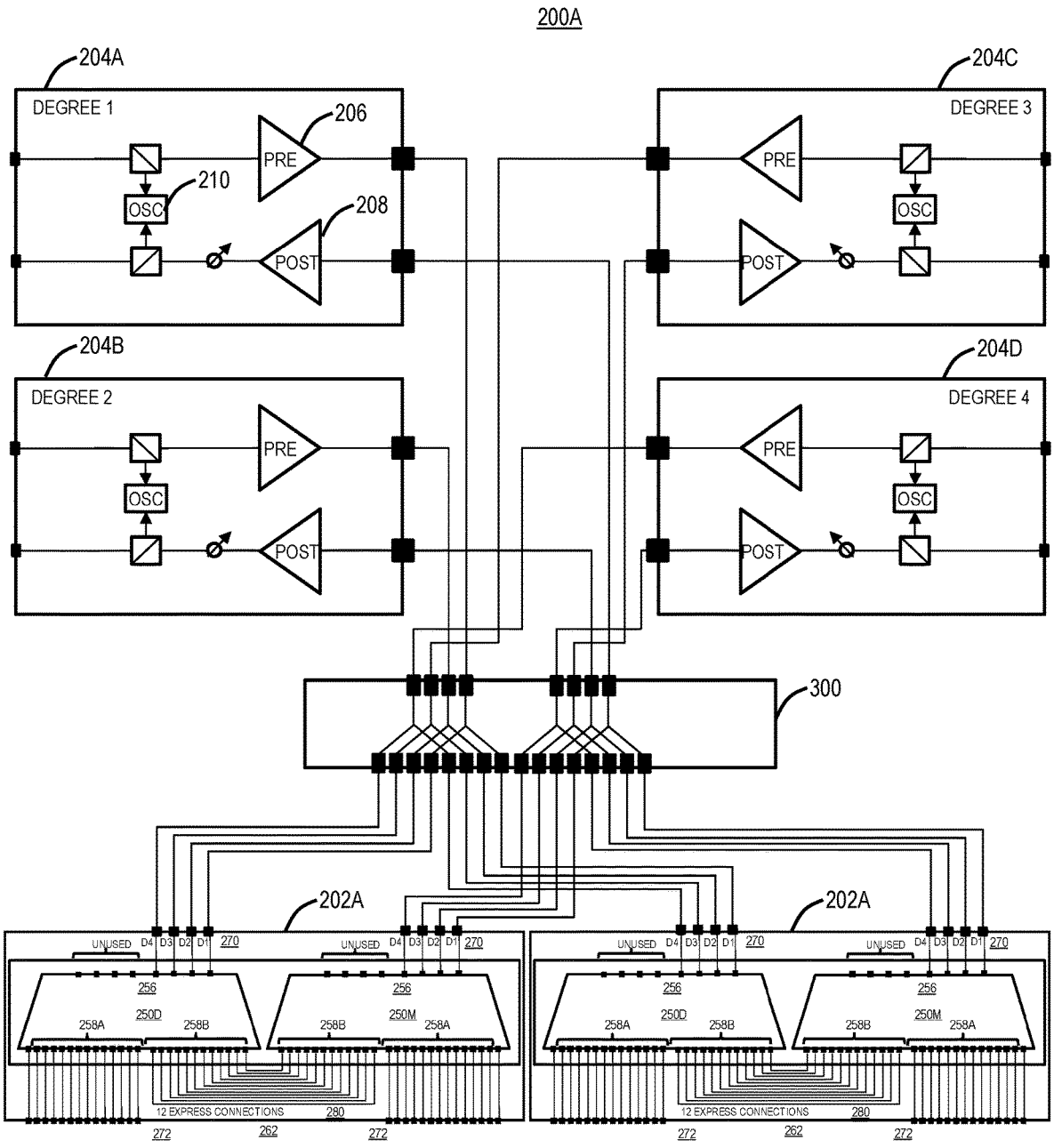
200A
204A
DEGREE 1
206
PRE
210
OSC
208
POST
204C
DEGREE 3
PRE
OSC
POST
204B
DEGREE 2
PRE
OSC
POST
204D
DEGREE 4
PRE
OSC
POST
300
202A
202A
UNUSED D4 D3 D2 D1 270
256
250D
250M
258A
258B
12 EXPRESS CONNECTIONS
280
272
262

FIG. 7

OPTIMIZED COLORLESS, DIRECTIONLESS, AND CONTENTIONLESS ROADM IN A MODULE

FIELD OF THE DISCLOSURE

[0001] The present disclosure generally relates to optical networking. More particularly, the present disclosure relates to systems and methods for an optimized Colorless, Directionless, and Contentionless (CDC) Reconfigurable Optical Add/Drop Multiplexer (ROADM) in an integrated module.

BACKGROUND OF THE DISCLOSURE

[0002] Optical networks utilize Reconfigurable Optical Add-Drop Multiplexers (ROADMs) to realize selective and reconfigurable add/drop of wavelengths or spectrum locally and between various degrees. ROADMs generally utilize Wavelength Selective Switches (WSSs) in different configurations. Flexibility in add/drop requirements has led to so-called colorless, directionless, and optionally contentionless add/drop multiplexer structures, such as in ROADM devices, nodes, architectures, and structures. A colorless add/drop device supports any wavelength or spectral occupancy/band being added to any port of an add/drop device, i.e., ports are not wavelength specific. A directionless add/drop device supports any port being directed to any degree. Finally, a contentionless add/drop device supports multiple instances of the same channel (wavelength) in the same device (albeit to different degrees). A colorless, directionless add/drop device can be referred to as a CD device, and a colorless, directionless, and contentionless add/drop device can be referred to as a CDC device.

[0003] CDC ROADM deployments are common and offer the most flexibility, albeit at higher costs and equipment requirements. Of note, conventional CDC configurations are less cost effective for smaller degree nodes. For this reason, network operators typically opt for CD or Colorless Direct Attach (CDA) configurations for smaller degree nodes (e.g., four or fewer degrees). It would be advantageous to provide a configuration which supports CDC in smaller degree and add/drop nodes with lower costs and equipment requirements.

BRIEF SUMMARY OF THE DISCLOSURE

[0004] In an embodiment, a Reconfigurable Optical Add/Drop Multiplexer (ROADM) node with a Colorless, Directionless, and Contentionless (CDC) architecture includes an integrated ROADM degree and add/drop module having M common input and output ports and N add/drop input and output ports, wherein the integrated ROADM degree and add/drop module is formed by an M×N demultiplexer Contentionless Wavelength Selective Switch (CWSS) and an M×N multiplexer CWSS, M and N are integers; and X degree modules, X is an integer and represents a number of degrees of the ROADM node, each having an input and output port connected to associated common ports of the integrated ROADM degree and add/drop module, wherein a first set of ports of the N add/drop input and output ports are connected between the demultiplexer CWSS and the multiplexer CWSS for degree-to-degree connectivity and a second set of ports of the N add/drop input and output ports are utilized for local add/drop of channels, such that the integrated ROADM degree and add/drop module provides both the degree-to-degree connectivity and the local add/drop of channels utilizing the demultiplexer CWSS and the multiplexer CWSS. X can be ≤4.

[0005] The first set of ports can be X*(X−1) input and output ports and the second set of ports can be N−X*(X−1) input and output ports. M−X input and output ports of the M common input and output ports can be unequipped. The first set of ports can include input and output ports for each degree to connect to every other degree. The demultiplexer CWSS and the multiplexer CWSS each can include M 1×N Wavelength Selective Switches (WSSs) each connected to one of M common ports; and N M×1 selector switches each connected to each of the M 1×N WSSs and connected to N add/drop ports. The M 1×N WSSs can be each formed using Liquid Crystal On Silicon (LCOS) and the N M×1 selector switches can be formed using Microelectromechanical systems (MEMS) mirrors or a Planar Lightwave Circuit (PLC). The X degree modules each can include a pre-amplifier, a post-amplifier, and an Optical Service Channel (OSC) module.

[0006] In another embodiment, an integrated Reconfigurable Optical Add/Drop Multiplexer (ROADM) degree and add/drop module with a Colorless, Directionless, and Contentionless (CDC) architecture includes M common input and output ports; and N add/drop input and output ports, an M×N demultiplexer Contentionless Wavelength Selective Switch (CWSS) and an M×N multiplexer CWSS, M and N are integers, configured to optically connect the M common input and output ports and the N add/drop input and output ports, wherein the integrated ROADM degree and add/drop module is utilized in an X degree ROADM node, X is an integer, and wherein a first set of ports of the N add/drop input and output ports are connected between the demultiplexer CWSS and the multiplexer CWSS for degree-to-degree connectivity and a second set of ports of the N add/drop input and output ports are utilized for local add/drop of channels, such that the integrated ROADM degree and add/drop module provides both the degree-to-degree connectivity and the local add/drop of channels utilizing the demultiplexer CWSS and the multiplexer CWSS. X can be ≤4.

[0007] The first set of ports can be X*(X−1) input and output ports and the second set of ports can be N−X*(X−1) input and output ports. M−X input and output ports of the M common input and output ports can be unequipped. The first set of ports can include input and output ports for each degree to connect to every other degree. The demultiplexer CWSS and the multiplexer CWSS each can include M 1×N Wavelength Selective Switches (WSSs) each connected to one of M common ports; and N M×1 selector switches each connected to each of the M 1×N WSSs and connected to N add/drop ports. The M 1×N WSSs can be each formed using Liquid Crystal On Silicon (LCOS) and the N M×1 selector switches can be formed using Microelectromechanical systems (MEMS) mirrors or a Planar Lightwave Circuit (PLC). Each of X of the M common input and output ports can be each connected to an associated degree module each including a pre-amplifier, a post-amplifier, and an Optical Service Channel (OSC) module.

[0008] In a further embodiment, a method includes providing an integrated Reconfigurable Optical Add/Drop Multiplexer (ROADM) degree and add/drop module with a Colorless, Directionless, and Contentionless (CDC) architecture, including M common input and output ports; and N add/drop input and output ports, an M×N demultiplexer

Contentionless Wavelength Selective Switch (CWSS) and an M×N multiplexer CWSS, M and N are integers, configured to optically connect the M common input and output ports and the N add/drop input and output ports, wherein the integrated ROADM degree and add/drop module is utilized in an X degree ROADM node, X is an integer, and wherein a first set of ports of the N add/drop input and output ports are connected between the demultiplexer CWSS and the multiplexer CWSS for degree-to-degree connectivity and a second set of ports of the N add/drop input and output ports are utilized for local add/drop of channels, such that the integrated ROADM degree and add/drop module provides both the degree-to-degree connectivity and the local add/drop of channels utilizing the demultiplexer CWSS and the multiplexer CWSS. The method can further include providing X degree modules each having an input and output port connected to associated common ports of the integrated ROADM degree and add/drop module. X can be ≤4. The first set of ports can be X*(X−1) input and output ports and the second set of ports can be N−X*(X−1) input and output ports.

BRIEF DESCRIPTION OF THE DRAWINGS

[0009] The present disclosure is illustrated and described herein with reference to the various drawings, in which like reference numbers are used to denote like system components/method steps, as appropriate, and in which:

[0010] FIG. **1** is a block diagram of an example four degree ROADM node utilizing multiple modules to form the degrees and the local add/drop;

[0011] FIG. **2** is a block diagram of an optimized ROADM node utilizing a single module to form the degrees and the local add/drop;

[0012] FIG. **3** is a block diagram of a contentionless WSS utilized in the optimized ROADM node;

[0013] FIG. **4** is a block diagram of nodal connectivity associated with the ROADM degree and add/drop module and two Contentionless Wavelength Selective Switches (CWSSs) in the optimized ROADM node of FIG. **2**;

[0014] FIG. **5** is a block diagram of module connectivity between the ROADM degree and add/drop module and the amplifier modules in the optimized ROADM node of FIG. **2**;

[0015] FIG. **6** is a block diagram of a CWSS on a demultiplexer side illustrating degree routing; and

[0016] FIG. **7** is a block diagram of module connectivity in an optimized ROAM node which includes two ROADM degree and add/drop modules for redundancy and/or increased port count.

DETAILED DESCRIPTION OF THE DISCLOSURE

[0017] In various embodiments, the present disclosure relates to an optimized Colorless, Directionless, and Contentionless (CDC) Reconfigurable Optical Add/Drop Multiplexer (ROADM) in an integrated module. Specifically, the proposed CDC ROADM described herein provides a small CDC architecture within a single module, e.g., supporting a four degree or less ROADM node. Variously, the CDC architecture proposed herein utilizes a same Wavelength Selective Switch (WSS) module for both degree connectivity and for local add/drop, enabling a single module to support a cost-reduced CDC ROADM. Thus, the switching elements of a CDC architecture is self-contained in the single module, providing cost reduction, less equipment, reduced power consumption, etc. versus a conventional, multi-module CDC architecture. The CDC architecture proposed herein is ideal for smaller degree nodes.

Conventional CDC ROADM Architecture

[0018] FIG. **1** is a block diagram of an example four degree ROADM node **100** utilizing multiple modules **102**, **104**, **106** to form the degrees and the local add/drop. Specifically, the ROADM node **100** includes four-degree modules **102**A, **102**B, **102**C, **102**D, a Fiber Interface Module (FIM) **104** for managing fiber connectivity between the modules **102**, **106**, and a local add/drop module **106**. The degree modules **102**A, **102**B, **102**C, **102**D each include a Wavelength Selective Switch (WSS) demultiplexer **110**, a WSS multiplexer **112**, pre-amplifier **116**, a post-amplifier **118**, and an Optical Channel Monitor (OCM) **114**. The degree modules **102**A, **102**B, **102**C, **102**D can further include an Optical Service Channel (OSC), and other components. The FIM module **104** can be a passive device which provides optical fiber connectivity between the degree modules **102**A, **102**B, **102**C, **102**D, between the degree modules **102**A, **102**B, **102**C, **102**D and the local add/drop module **106**. The local add/drop module **106** provides connectivity to local optical transceivers, modems, etc. to the degrees via the degree modules **102**A, **102**B, **102**C, **102**D. The local add/drop module **106** includes a WSS **120** for channel adds, a WSS **122** for channel drops, and amplifiers **124** (which can be optional).

[0019] The four-degree ROADM node **100** includes a CDC architecture which is flexible, operationally simple, and future-proof. Any wavelength can be added/dropped or expressed through any degree, through software configuration. However, the CDC architecture illustrated in the four degree ROADM node **100** has significant cost, required equipment, and power consumption. Specifically, the four-degree ROADM node **100** has eight WSS modules **110**, **112** and two WSS modules **120**,**122** for a total of 10 WSS modules.

Optimized CDC ROADM Architecture

[0020] Accordingly, embodiments are presented directed to an optimized CDC ROADM architecture which reduces the equipment, footprint, and cost/power associated with the four degree ROADM node **100**. FIG. **2** is a block diagram of an optimized ROADM node **200** utilizing a single module **202** to form the degrees and the local add/drop degrees and local add/drop switching. Specifically, the optimized ROADM node **200** provides the same CDC architecture as the four-degree ROADM node **100** albeit with reduced equipment. The optimized ROADM node **200** includes a ROADM degree and add/drop module **202** which is a single module providing WSS functionality for both degree-to-degree connectivity and for local add/drop. The ROADM degree and add/drop module **202** provides the degree functionality of the degree modules **102**A, **102**B, **102**C, **102**D. Instead, the optimized ROADM node **200** includes amplifier modules **204**A, **204**B, **204**C, **204**D instead of the degree modules **102**A, **102**B, **102**C, **102**D. The amplifier module **204** includes a pre-amplifier **206**, a post-amplifier **208**, and an OSC **210**. Note, the amplifier modules **204** do not require WSS components as the degree modules **102** include.

Accordingly, the amplifier modules **204** have reduced cost, space, and power relative to the degree modules **102**.

[0021] Note, the four-degree ROADM node **100** and the optimized ROADM node **200** are both shown with four degrees for illustration purposes. As described herein, the four-degree ROADM node **100** has a total of 10 WSS modules whereas the optimized ROADM node **200** requires only 2 WSS modules, namely a contentionless WSS **250** (one for the multiplexer and one for the demultiplexer). Those of ordinary skill in the art will recognize the single module **202** can be used to form other nodal architectures, i.e., one, two, three-degrees. Also, the single module **202** can be used to form larger degrees, i.e., five or more, at the expense of a reduction in local add/drop. The proposed solution advantageously enables implementation of smaller degree nodes with a CDC approach.

[0022] The four-degree ROADM node **100** can also include the OCM **114** to provide monitoring functionality. In an embodiment, the OCM **114** can be integrated in the single module **202**. In another embodiment, the OCM **114** can be in each of the amplifier modules **204**A, **204**B, **204**C, **204**D.

Contentionless WSS

[0023] FIG. **3** is a block diagram of a contentionless WSS (CWSS) **250** utilized in the optimized ROADM node **200**. The CWSS **250** is utilized to realize the CDC architecture. Previously, the CDC architecture was formed through Multicast Switches (MCS). Advantageously, the CWSS **250** has, relative to the MCS implementation of a CDC architecture, a significantly lower loss, the potential to scale to higher port counts, and channel filtering is built-in in the multiplexing direction to reduce noise funneling. The systems and methods herein utilize the CWSS **250** to realize the CDC architecture in the optimized ROADM node **200**. An example of the CWSS **250** is described in Colbourne, P. D., McLaughlin, S., Murley, C., Gaudet, S., & Burke, D. (2018, March), "Contentionless Twin 833 24 WSS with Low Insertion Loss," in *Optical Fiber Communication Conference* (pp. Th4A-1), Optical Society of America, the contents of which are incorporated by reference herein.

[0024] The CWSS **250** includes an M-array of 1×N WSSs **252** and an N-array of M×1 selector switches **254**. The CWSS **250** requires two switching elements, namely the M-array of 1×N WSS **252** and the N-array of M×1 selector switches **254** (whereas the MCS has a single switching element with combiners/splitters). Thus, the CWSS **250** can be referred to as an M×N device (M, N are integers, such as 8×24, etc.).

[0025] The M ports connected to the 1×N WSSs **252** can be referred to as common ports **256** of the CWSS **250** and each is connected to a fully independent 1×N WSS **252**, enabling individual wavelengths to be routed independently to any of N Add/Drop ports **258** connected to the M×1 selector switches **254**. Each of the N Add/Drop ports **258** can be coupled to any common port **256** of the CWSS **250** via the bank of M×1 selector switches **254**. Note that each add/drop port **258** can be connected to only one common port **256** at one time (there is no wavelength selectivity in the M×1 selector switches **254**). The function is similar to a multicast switch, but with 1×N splitters replaced by 1×N WSS's. Up to M instances of a given wavelength can be routed independently through the M×N CWSS **250** without contention.

[0026] In an embodiment, the CWSS **250** can be 8×24 (M=8, N=24) and the 1×24 WSS's **252** can be implemented using Liquid Crystal On Silicon (LCOS) phase modulator beam steering. One LCOS panel can be sub-divided into several independent sections, to control multiple independent WSS's within the same device, plus the LCOS steering engine enables flexible spectrum operation with variable channel widths. To minimize insertion loss, the 8×1 selector switches **254** can be implemented using an array of Micro-electromechanical systems (MEMS) mirrors (a Planar Lightwave Circuit (PLC) design also possible). An advantage of MEMS mirrors as the switch elements is high isolation, thus preventing same-wavelength signals from different common ports **256** from causing interference.

[0027] The foregoing description utilizes the CWSS **250** as an 8×26 device (M=8, N=26) for describing the implementation of the ROADM degree and add/drop module **202**. Those of ordinary skill in the art will recognize that different values of M and N are contemplated.

Single ROADM Degree and Add/Drop Module

[0028] FIG. **4** is a block diagram of nodal connectivity associated with the ROADM degree and add/drop module **202** and two CWSSs **250** in the optimized ROADM node **200**. FIG. **5** is a block diagram of module connectivity between the ROADM degree and add/drop module **202** and the amplifier modules **204**A, **204**B, **204**C, **204**D in the optimized ROADM node **200**. Again, for illustration purposes, FIGS. **4** and **5** illustrate a four-degree configuration and other degree configurations are also contemplated.

[0029] The present disclosure contemplates a single ROADM degree and add/drop module **202** which performs the degree connectivity and the local add/drop connectivity in a single, integrated module. The ROADM degree and add/drop module **202** provides the functionality of the local add/drop module **106** and the WSS demultiplexer **110** and the WSS multiplexer **112** in the degree modules **102**.

[0030] The single ROADM degree and add/drop module **202** includes two CWSS **250** modules which are denoted as CWSS **250**D for a demultiplexer WSS and CWSS **250**M for a multiplexer WSS, i.e., the single ROADM degree and add/drop module **202** contains both the multiplexer and demultiplexer WSS functions. In an embodiment, the CWSS **250**D, **250**M can be a twin contentionless 8×26 WSS module. The CWSS **250**D, **250**M is generally designed to act as CDC multiplexer/demultiplexer when used in combination with a high port count twin WSS on the line side (such as the WSSs **120**, **122** in FIG. **1**). However, through remapped internal connectivity, the CWSSs **250**D, **250**M are also repurposed to provide a multi-degree CDC ROADM along with the add/drop functionality.

[0031] FIG. **4** illustrates logical connectivity using the single ROADM degree and add/drop module **202** to provide a four degree CDC architecture and to locally add/drop **14** channels. The optimized ROADM node **200** includes four degrees, labeled D**1**, D**2**, D**3**, D**4**. FIG. **4** is illustrated logically from right to left with the right side showing node ingress via four pre-amplifiers **206**, one for each degree D**1**, D**2**, D**3**, D**4**, and each input into an associated common port **256** of the CWSS **250**D.

[0032] The CWSS **250**D has ports **258**, which are denoted as add/drop ports **258**A and express ports **258**B. The add/drop ports **258**A are used for local add/drop **260** and the express ports **258**B are used for degree-to-degree connec-

tivity **262**. On the CWSS **250**D, the add/drop ports **258**A are used for dropping channels from the degrees D**1**, D**2**, D**3**, D**4**. The express ports **258**B on the CWSS **250**D connect to respective express ports **258**B on the CWSS **250**M. For example, a degree D**1**-D**2** express port **258**B on the CWSS **250**D connects to a corresponding degree D**1**-D**2** express port **258**B on the CWSS **250**M, and the like. The CWSS **250**M also has add/drop ports **258**A used for local add/drop **260**. On the CWSS **250**M, the add/drop ports **258**A are used for adding channels locally to the degrees D**1**, D**2**, D**3**, D**4**.

[0033] Of note, an aspect of the proposed solution is the unique connectivity between the express ports **258**B on the CWSS **250**D and the express ports **258**B on the CWSS **250**M for the degree-to-degree connectivity. Because the CWSS **250**D, **250**M uses MEMS for the add/drop ports **258**, e.g., the M×1 selector switches **254**, the CWSS **250**D, **250**M can only route spectrum from/to a specific degree. As such, it is not possible to simply connect the multiplexer and demultiplexer halves of a module and route traffic arbitrarily between degrees.

[0034] For example, traffic incident on degree D**1** has spectrum that needs to be routed to degrees D**2**, D**3**, D**4**. Since the input to the CWSS **250**M module has a MEMs switch which selects a given degree (stripe of LCOS), it is not possible to send all the express traffic to one port. Express traffic from degree D**1** needs to be routable to an input dedicated to degree D**2**, D**3**, D**4**. FIG. **6** is a block diagram of the CWSS **250**D illustrating degree routing. Here, degree D**1** is input to a 1×N WSS **252**A which steers light towards a given output port's MEMs switch. As such, the express ports **258**B require a port for each degree, namely D**1**-D**2**, D**1**-D**3**, etc.

[0035] For X degrees, X being an integer, the configuration of the CWSS **250**D, **250**M requires X*(X−**1**) ports to route express traffic. Thus, for four degrees, the optimized ROADM node **200** requires 4*(4−1)=12 port connections between the CWSS **250**D and the CWSS **250**M halves of the module.

[0036] Assume the CWSS **250**D, **250**M are M×N devices (M, N are integers, typically M<N, but not required) and there are X degrees, X is an integer (X must be less than or equal to M), the following provides the port numbers available for local add/drop.

[0037] Number of the express ports **258**B required for degree-to-degree connectivity **262**=X*(X−1).

[0038] The M common ports **256** on each of the CWSS **250**D, **250**M are connected to the X degrees, and if M>X, these ports are unequipped.

[0039] Number of the express ports **258**B for the local add/drop **260**=N−X*(X−1).

[0040] Assume the CWSS **250**D, **250**M are 8×26 (M=8, N=26), the following table illustrates capabilities for a different number of degrees (these numbers apply to one of the CWSS **250**D, **250**M):

TABLE 1

Example port counts for different degrees and an 8 × 26 CWSS

Number of Degrees	Common ports 256	Add/drop ports 258
2	2 equipped; 6 unequipped	2 for degree-to-degree connectivity 262 24 for local add/drop 260
3	3 equipped; 5 unequipped	6 for degree-to-degree connectivity 262 20 for local add/drop 260
4	4 equipped; 4 unequipped	12 for degree-to-degree connectivity 262 14 for local add/drop 260
5	5 equipped; 3 unequipped	20 for degree-to-degree connectivity 262 6 for local add/drop 260

[0041] As seen in Table 1, the CWSS **250**D, **250**M in the optimized ROADM node **200** provide reasonable add/drop counts for degrees four and lower, at the expense of unused/unequipped common ports and at a significantly lower cost, power, and footprint relative to the CDC architecture of the four-degree ROADM node **100**.

[0042] Of course, other values of M×N are contemplated. For example, it is expected that N will increase, e.g., 26 to 40, etc. This would enable more degrees, e.g., an 8×40 CWSS **250**D, **250**M would enable the 5 degrees with 20 local add/drop **260**. Thus, when N is larger, it may be possible to deploy the optimized ROADM node **200** at higher degree nodes (e.g., 5 or more). In this manner, the optimized ROADM node **200** may support the CDC architecture at all nodes in a network.

[0043] FIG. **5** illustrates a module configuration for realizing the optimized ROADM node **200** using the CWSS **250**D, **250**M. Of note, FIG. **5** has the same functionality as FIG. **1** albeit with less equipment and the ROADM degree and add/drop module **202** for providing both local add/drop **260** and degree-to-degree connectivity **262**. From a hardware perspective, the ROADM degree and add/drop module **202** can be a rack-mountable module (e.g., 1-2 Rack Units (RU) high) or circuit pack inserted into a shelf with 2M common ports **270** and 2N add/drop ports **272**. The ports **270**, **272** are optical ports configured for an optical fiber, patch cord, etc. The ROADM degree and add/drop module **202** includes both the CWSS **250**D, **250**M and thus has 2M common ports **270** and 2N add/drop ports **272**.

[0044] In this example, four degrees and 8×26 CWSS **250**D, **250**M, the 2M common ports **270** include 8 ports on the CWSS **250**D and 8 ports on the CWSS **250**M, four of which on each are unused/unequipped as described herein. The 2N add/drop ports **272** includes 14 local add/drop **260** channels on each of the CWSS **250**D, **250**M and 12 express connections between the express ports **258**B for the degree-to-degree connectivity **262**. In an embodiment, express connections **280** can be internally connected inside the ROADM degree and add/drop module **202** (as illustrated in FIG. **5**). In another embodiment, the express ports **258**B can also have faceplate ports on the ROADM degree and add/drop module **202** and the express connections **280** can be formed by cabling between the faceplate ports.

[0045] Note, each of the CWSS **250**D, **250**M is M×N, so the overall ROADM degree and add/drop module **202** can

have 2M common ports and 2N add/drop ports on the faceplate, i.e., each port can connect to one optical fiber and a channel can be an input and an output port. Additionally, the term port used herein can refer to two physical connections on the ROADM degree and add/drop module **202**. For example, an input and output port physically has two connections—one each for input and output. For example, the CWSS **250**D, **250**M are deployed in a so-called twin module. The express connections **280** can be ports of each of the twin connected to one another.

ROADM Node with an Optimized CDC Architecture

[0046] In an embodiment, a ROADM node with an optimized CDC architecture includes an integrated ROADM degree and add/drop module **202** having M common input and output ports **270** and N add/drop input and output ports **272**, wherein the integrated ROADM degree and add/drop module **202** is formed by an M×N demultiplexer Contentionless Wavelength Selective Switch (CWSS) **250**D and an M×N multiplexer CWSS **250**M, M and N are integers; and X degree modules **204**, X is an integer and represents a number of degrees of the ROADM node, each having an input and output port connected to associated common ports **270** of the integrated ROADM degree and add/drop module **202**, wherein a first set of ports **258**B of the N add/drop input and output ports **272** are connected between the demultiplexer CWSS **250**D and the multiplexer CWSS **250**M for degree-to-degree connectivity **262** and a second set of ports **258**A of the N add/drop input and output ports **272** are utilized for local add/drop **260** of channels, such that the integrated ROADM degree and add/drop module **202** provides both the degree-to-degree connectivity **262** and the local add/drop **260** of channels utilizing the demultiplexer CWSS **250**D and the multiplexer CWSS **250**M. Optionally, the number of degrees is X≤4.

[0047] The first set of ports **258**B is X*(X−1) input and output ports and the second set of ports **258**A is N−X*(X−1) input and output ports. M−X input and output ports of the M common input and output ports **270** are unequipped. The first set of ports **258**B include input and output ports for each degree to connect to every other degree. The demultiplexer CWSS **250**D and the multiplexer CWSS **250**M each include M 1×N Wavelength Selective Switches (WSSs) **252** each connected to one of M common ports **256**; and N M×1 selector switches **254** each connected to each of the M 1×N WSSs **252** and connected to N add/drop ports **258**. The M 1×N WSSs **252** are each formed using Liquid Crystal On Silicon (LCOS) and the N M×1 selector switches **254** are formed using Microelectromechanical systems (MEMS) mirrors. The X degree modules **204** each can include a pre-amplifier **206**, a post-amplifier **208**, and an Optical Service Channel (OSC) module **210**.

[0048] In another embodiment, an integrated ROADM degree and add/drop module **202** with an optimized CDC architecture includes M common input and output ports **270**; and N add/drop input and output ports **272**, an M×N demultiplexer Contentionless Wavelength Selective Switch (CWSS) **250**D and an M×N multiplexer CWSS **250**M, M and N are integers, configured to optically connect the M common input and output ports **270** and the N add/drop input and output ports **272**, wherein the integrated ROADM degree and add/drop module **202** is utilized in an X degree ROADM node, X is an integer, and wherein a first set of ports **258**B of the N add/drop input and output ports **272** are connected between the demultiplexer CWSS **250**D and the multiplexer CWSS **250**M for degree-to-degree connectivity **262** and a second set of ports **258**A of the N add/drop input and output ports **272** are utilized for local add/drop **260** of channels, such that the integrated ROADM degree and add/drop module **202** provides both the degree-to-degree connectivity **262** and the local add/drop **260** of channels utilizing the demultiplexer CWSS **250**D and the multiplexer CWSS **250**M.

Redundant Configuration

[0049] FIG. **7** is a block diagram of module connectivity in an optimized ROAM node **200**A which includes two ROADM degree and add/drop modules **202**A, **202**B for redundancy and/or increased port count. The optimized ROAM node **200**A in FIG. **7** is similar to the optimized ROAM node **200** in FIG. **5** with four amplifier modules **204**A, **204**B, **204**C, **204**D. Again, for illustration purposes, FIG. **7** illustrates a four-degree configuration and other degree configurations are also contemplated. The optimized ROAM node **200**A includes two of the ROADM degree and add/drop modules **202**A, **202**B along with a splitter **300** located between the ROADM degree and add/drop modules **202**A, **202**B and the amplifier modules **204**A, **204**B, **204**C, **204**D. The splitter **300** is a passive splitter array in both the transmit and the receive direction.

[0050] Functionally, the optimized ROAM node **200**A provides redundancy, namely the ROADM degree and add/drop modules **202** is not a single point of failure. However, the optimized ROAM node **200**A can also support 2× the port count due to the presence of two ROADM degree and add/drop modules **202**A, **202**B. For example, the optimized ROAM node **200**A can support additional local add/drop ports.

[0051] On the add/drop ports **272**, there can be a second transceiver for 1+1/1:1/etc. protection or an Optical Protection Switch (OPS) which only utilizes a single transceiver. With the optimized ROAM node **200**A for redundancy, there is protection against a complete node failure in the event a single ROADM degree and add/drop module **202** fails. Also, the optimized ROAM node **200**A can also provide express redundancy, software could detect a failed ROADM degree and add/drop module **202**A and route the express traffic via the second ROADM degree and add/drop module **202**B.

[0052] It will be appreciated that some embodiments described herein may include one or more generic or specialized processors ("one or more processors") such as microprocessors; Central Processing Units (CPUs); Digital Signal Processors (DSPs): customized processors such as Network Processors (NPs) or Network Processing Units (NPUs), Graphics Processing Units (GPUs), or the like; Field Programmable Gate Arrays (FPGAs); and the like along with unique stored program instructions (including both software and firmware) for control thereof to implement, in conjunction with certain non-processor circuits, some, most, or all of the functions of the methods and/or systems described herein. Alternatively, some or all functions may be implemented by a state machine that has no stored program instructions, or in one or more Application Specific Integrated Circuits (ASICs), in which each function or some combinations of certain of the functions are implemented as custom logic or circuitry. Of course, a combination of the aforementioned approaches may be used. For

some of the embodiments described herein, a corresponding device in hardware and optionally with software, firmware, and a combination thereof can be referred to as "circuitry configured or adapted to," "logic configured or adapted to," etc. perform a set of operations, steps, methods, processes, algorithms, functions, techniques, etc. on digital and/or analog signals as described herein for the various embodiments.

[0053] Moreover, some embodiments may include a non-transitory computer-readable storage medium having computer readable code stored thereon for programming a computer, server, appliance, device, processor, circuit, etc. each of which may include a processor to perform functions as described and claimed herein. Examples of such computer-readable storage mediums include, but are not limited to, a hard disk, an optical storage device, a magnetic storage device, a ROM (Read Only Memory), a PROM (Programmable Read Only Memory), an EPROM (Erasable Programmable Read Only Memory), an EEPROM (Electrically Erasable Programmable Read Only Memory), Flash memory, and the like. When stored in the non-transitory computer-readable medium, software can include instructions executable by a processor or device (e.g., any type of programmable circuitry or logic) that, in response to such execution, cause a processor or the device to perform a set of operations, steps, methods, processes, algorithms, functions, techniques, etc. as described herein for the various embodiments.

[0054] Although the present disclosure has been illustrated and described herein with reference to preferred embodiments and specific examples thereof, it will be readily apparent to those of ordinary skill in the art that other embodiments and examples may perform similar functions and/or achieve like results. All such equivalent embodiments and examples are within the spirit and scope of the present disclosure, are contemplated thereby, and are intended to be covered by the following claims.

1. A Reconfigurable Optical Add/Drop Multiplexer (ROADM) node with a Colorless, Directionless, and Contentionless (CDC) architecture, the ROADM node comprising:

an integrated ROADM degree and add/drop module having M common input and output ports and N add/drop input and output ports, wherein the integrated ROADM degree and add/drop module is formed by an M×N demultiplexer Contentionless Wavelength Selective Switch (CWSS) and an M×N multiplexer CWSS, M and N are integers; and

X degree modules, X is an integer and represents a number of degrees of the ROADM node, each having an input and output port connected to associated common ports of the integrated ROADM degree and add/drop module,

wherein a first set of ports of the N add/drop input and output ports are connected between the demultiplexer CWSS and the multiplexer CWSS for degree-to-degree connectivity and a second set of ports of the N add/drop input and output ports are utilized for local add/drop of channels, such that the integrated ROADM degree and add/drop module provides both the degree-to-degree connectivity and the local add/drop of channels utilizing the demultiplexer CWSS and the multiplexer CWSS, and

wherein the first set of ports is X*(X−1) input and output ports and the second set of ports is N−X*(X−1) input and output ports.

2. The ROADM node of claim **1**, wherein X≤4.

3. (canceled)

4. The ROADM node of claim **1**, wherein M−X input and output ports of the M common input and output ports are unequipped.

5. The ROADM node of claim **1**, wherein the first set of ports comprise input and output ports for each degree to connect to every other degree.

6. The ROADM node of claim **1**, wherein the demultiplexer CWSS and the multiplexer CWSS each comprise:

M 1×N Wavelength Selective Switches (WSSs) each connected to one of M common ports; and

N M−1 selector switches each connected to each of the M 1×N WSSs and connected to N add/drop ports.

7. The ROADM node of claim **6**, wherein the M 1×N WSSs are each formed using Liquid Crystal On Silicon (LCOS) and the N M×1 selector switches are formed using Microelectromechanical systems (MEMS) mirrors or a Planar Lightwave Circuit (PLC).

8. The ROADM node of claim **1**, wherein the X degree modules each comprise a pre-amplifier, a post-amplifier, and an Optical Service Channel (OSC) module.

9. An integrated Reconfigurable Optical Add/Drop Multiplexer (ROADM) degree and add/drop module with a Colorless, Directionless, and Contentionless (CDC) architecture, comprising:

M common input and output ports; and

N add/drop input and output ports, an M×N demultiplexer Contentionless Wavelength Selective Switch (CWSS) and an M×N multiplexer CWSS, M and N are integers, configured to optically connect the M common input and output ports and the N add/drop input and output ports,

wherein the integrated ROADM degree and add/drop module is utilized in an X degree ROADM node, X is an integer,

wherein a first set of ports of the N add/drop input and output ports are connected between the demultiplexer CWSS and the multiplexer CWSS for degree-to-degree connectivity and a second set of ports of the N add/drop input and output ports are utilized for local add/drop of channels, such that the integrated ROADM degree and add/drop module provides both the degree-to-degree connectivity and the local add/drop of channels utilizing the demultiplexer CWSS and the multiplexer CWSS, and

wherein the first set of ports is X*(X−1) input and output ports and the second set of ports is N−X*(X−1) input and output ports.

10. The integrated ROADM degree and add/drop module of claim **9**, wherein X≤4.

11. (canceled)

12. The integrated ROADM degree and add/drop module of claim **9**, wherein M−X input and output ports of the M common input and output ports are unequipped.

13. The integrated ROADM degree and add/drop module of claim **9**, wherein the first set of ports comprise input and output ports for each degree to connect to every other degree.

14. The integrated ROADM degree and add/drop module of claim **9**, wherein the demultiplexer CWSS and the multiplexer CWSS each comprise:

M 1×N Wavelength Selective Switches (WSSs) each connected to one of M common ports; and

N M×1 selector switches each connected to each of the M 1×N WSSs and connected to N add/drop ports.

15. The integrated ROADM degree and add/drop module of claim **14**, wherein the M 1×N WSSs are each formed using Liquid Crystal On Silicon (LCOS) and the N M×1 selector switches are formed using Microelectromechanical systems (MEMS) mirrors or a Planar Lightwave Circuit (PLC).

16. The integrated ROADM degree and add/drop module of claim **9**, wherein each of X of the M common input and output ports are each connected to an associated degree module each comprising a pre-amplifier, a post-amplifier, and an Optical Service Channel (OSC) module.

17. (canceled)

18. (canceled)

19. (canceled)

20. (canceled)

21. An integrated Reconfigurable Optical Add/Drop Multiplexer (ROADM) degree and add/drop module with a Colorless, Directionless, and Contentionless (CDC) architecture, comprising:

M common input and output ports; and

N add/drop input and output ports, an M×N demultiplexer Contentionless Wavelength Selective Switch (CWSS) and an M×N multiplexer CWSS, M and N are integers, configured to optically connect the M common input and output ports and the N add/drop input and output ports,

wherein the integrated ROADM degree and add/drop module is utilized in an X degree ROADM node, X is an integer,

wherein a first set of ports of the N add/drop input and output ports are connected between the demultiplexer CWSS and the multiplexer CWSS for degree-to-degree connectivity and a second set of ports of the N add/drop input and output ports are utilized for local add/drop of channels, such that the integrated ROADM degree and add/drop module provides both the degree-to-degree connectivity and the local add/drop of channels utilizing the demultiplexer CWSS and the multiplexer CWSS, and.

wherein the demultiplexer CWSS and the multiplexer CWSS each include M 1×N Wavelength Selective Switches (WSSs) each connected to one of M common ports, and N M×1 selector switches each connected to each of the M 1×N WSSs and connected to N add/drop ports.

22. The integrated ROADM degree and add/drop module of claim **21**, wherein X≤4.

23. The integrated ROADM degree and add/drop module of claim **21**, wherein M−X input and output ports of the M common input and output ports are unequipped.

24. The integrated ROADM degree and add/drop module of claim **21**, wherein the first set of ports comprise input and output ports for each degree to connect to every other degree.

25. The integrated ROADM degree and add/drop module of claim **21**, wherein the M 1×N WSSs are each formed using Liquid Crystal On Silicon (LCOS) and the N M×1 selector switches are formed using Microelectromechanical systems (MEMS) mirrors or a Planar Lightwave Circuit (PLC).

26. The integrated ROADM degree and add/drop module of claim **21**, wherein each of X of the M common input and output ports are each connected to an associated degree module each comprising a pre-amplifier, a post-amplifier, and an Optical Service Channel (OSC) module.

* * * * *