(12) INTERNATIONAL APPLICATION PUBLISHED UNDER THE PATENT COOPERATION TREATY (PCT)

(19) World Intellectual Property Organization
International Bureau

(43) International Publication Date
7 May 2015 (07.05.2015)

WIPO | PCT

(10) International Publication Number
WO 2015/066280 A1

(51) International Patent Classification:
A61B 5/107 (2006.01) *A61B 8/14* (2006.01)

(21) International Application Number:
PCT/US2014/063079

(22) International Filing Date:
30 October 2014 (30.10.2014)

(25) Filing Language: English

(26) Publication Language: English

(30) Priority Data:
61/897,315 30 October 2013 (30.10.2013) US

(71) Applicant *(for all designated States except US)*: **BRIGHAM AND WOMEN'S HOSPITAL, INC.** [US/US]; 75 Francis Street, Boston, MA 02115 (US).

(72) Inventors; and
(71) Applicants *(for US only)*: **VOSBURGH, Kirby, Gannett** [US/US]; 110 Pickwick Rd., Newton, MA 02465 (US). **WHITE, Phillip, Jason** [US/US]; 41 Wallingford Rd., #2, Boston, MA 02135 (US).

(74) Agent: **STONE, Jonathan, D.**; Quarles & Brady LLP, 411 E. Wisconsin Ave., Milwaukee, WI 53202 (US).

(81) Designated States *(unless otherwise indicated, for every kind of national protection available)*: AE, AG, AL, AM, AO, AT, AU, AZ, BA, BB, BG, BH, BN, BR, BW, BY, BZ, CA, CH, CL, CN, CO, CR, CU, CZ, DE, DK, DM, DO, DZ, EC, EE, EG, ES, FI, GB, GD, GE, GH, GM, GT, HN, HR, HU, ID, IL, IN, IR, IS, JP, KE, KG, KN, KP, KR, KZ, LA, LC, LK, LR, LS, LU, LY, MA, MD, ME, MG, MK, MN, MW, MX, MY, MZ, NA, NG, NI, NO, NZ, OM, PA, PE, PG, PH, PL, PT, QA, RO, RS, RU, RW, SA, SC, SD, SE, SG, SK, SL, SM, ST, SV, SY, TH, TJ, TM, TN, TR, TT, TZ, UA, UG, US, UZ, VC, VN, ZA, ZM, ZW.

(84) Designated States *(unless otherwise indicated, for every kind of regional protection available)*: ARIPO (BW, GH, GM, KE, LR, LS, MW, MZ, NA, RW, SD, SL, ST, SZ, TZ, UG, ZM, ZW), Eurasian (AM, AZ, BY, KG, KZ, RU, TJ, TM), European (AL, AT, BE, BG, CH, CY, CZ, DE, DK, EE, ES, FI, FR, GB, GR, HR, HU, IE, IS, IT, LT, LU, LV, MC, MK, MT, NL, NO, PL, PT, RO, RS, SE, SI, SK, SM, TR), OAPI (BF, BJ, CF, CG, CI, CM, GA, GN, GQ, GW, KM, ML, MR, NE, SN, TD, TG).

Published:

— *with international search report (Art. 21(3))*

(54) Title: VENTRICULOSTOMY GUIDANCE DEVICE

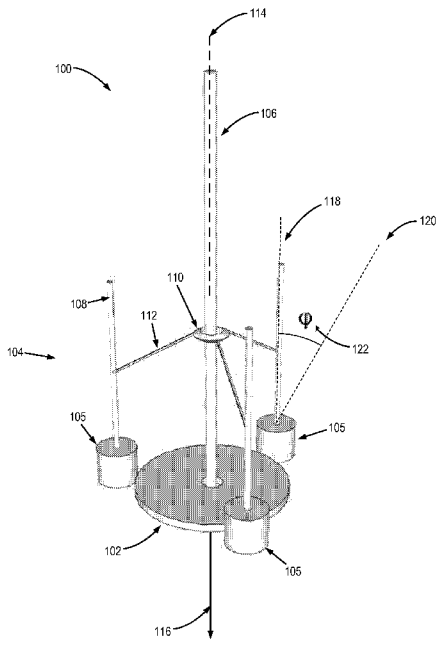

FIG. 1

(57) Abstract: A system is provided for guiding a medical instrument relative to a subject's anatomy using ultrasound-guided imaging. The system includes a support frame configured to be positioned on the subject's anatomy, the support frame defining an entry location for the medical instrument, and at least one ultrasound transducer coupled to the support frame and arranged such that the at least one ultrasound transducer is operable to transmit ultrasound energy to the subject's anatomy and receive echo signals therefrom. The system also includes a processor in communication with the at least one ultrasound transducer and configured to receive the echo signals and generate a trajectory that extends from the entry location to a desired region of the subject's anatomy.

WO 2015/066280 A1

VENTRICULOSTOMY GUIDANCE DEVICE

CROSS-REFERENCE TO RELATED APPLICATIONS

[0001] This application is based on, claims priority to, and incorporates herein by reference in its entirety U.S. Provisional Application Serial No. 61/897,315 filed October 30, 2013 , and entitled "VENTRICULOSTOMY GUIDANCE DEVICE."

BACKGROUND OF THE INVENTION

[0002] The field of the invention is systems and devices for interventional medicine. More particularly, the system described herein supports a guided intracranial instrument insertion without the disadvantages of known technologies.

[0003] Extra Ventricular Drains ("EVD") are often placed to relieve intracranial pressure in patients with subarachnoid hemorrhage and head trauma. The procedure is generally performed freehand. Published studies have reported rates of initial EVD catheter misplacement as high as 100%. Further studies have estimated the mean distance error from optimal placement for these free-hand procedures to be ~16 mm, with typically 2 passes needed for placement, and nearly one quarter of catheter tip placements outside of the ventricular space. While it is based on survey of practicing neurosurgeons and residents, the paper of O'Neill *et al.* ("A survey of ventriculostomy placement and intracranial pressure monitor placement practices," Surgical Neurology 2008; 70:268-73) is the most comprehensive study, with over 900 returned questionnaires. It is notable that all practitioners, including experienced, active neurosurgeons, report frequently requiring more than one attempt to complete a successful ventriculostomy, and many had observed peers make multiple attempts. While immediately observable brain injury, such as blood on the stylet, occurs in less than 2% of cases, significant injuries, including functional deficits, are observed in many cases; the data are spotty and inconsistent, but 10-15% is a rough average.

[0004] There are several image-guidance systems commercially available to assist and improve the accuracy of brain targeting. However, despite their performance (error ~5 mm) and clear patient benefit, they are not commonly used. According to the O'Neill *et al.* survey, only a few percent of the 934 American neurosurgeon respondents used such a system on a regular basis. This low rate appears to be due to two factors: 1) the equipment is expensive and cumbersome to use, thus greatly extending the time required, and 2) current practice is "good enough." Simple alignment fixtures, such as

the Ghajar approach, ("A guide for ventricular catheter placement (technical note)." J Neurosurg 1985; 63(6) 985-986) may also be used to improve accuracy for ventricles of normal shape and location. However, this is performed without cannula trajectory monitoring and direct confirmation of placement, and less than 5% of neurosurgeons and none of the 100 reporting residents reported using such a guide. In addition, a hybrid approach has been recently demonstrated (Patil,V *et al.* "Accuracy of an electromagnetic tracking system for image guided placement of external ventricular drain," American Association of Neurological Surgeons 2010, Philadelphia, PA) in which a pre-procedure CT-based model is registered to the skull and a "GPS-like" display guides a stylet to its target. However, this device also requires extensive setup and the availability of a pre-procedure CT.

[0005] Therefore, given these shortcomings, it would be desirable to have a system that will not require pre-procedure images of the ventricles or independent systems for head tracking. It would also be desirable to have a system that will be a stand-alone system, requiring minimal training, and with performance and ease of use intended to promote adoption and increase the potential for becoming a standard of care.

SUMMARY OF THE INVENTION

[0006] The present invention overcomes the aforementioned drawbacks by providing a low cost, easily used system for guiding a medical instrument relative to a subject's anatomy for use in trans-cranial procedures. The system includes a support frame configured to be positioned on the subject's anatomy. The support frame defines an entry location for a medical instrument. The system also includes an instrument guide coupled to the support frame. The instrument guide includes an annular portion coupled on one end to the entry location for the medical instrument. The instrument guide is configured to receive the medical instrument such that the medical instrument can be guided to this entry location. The system also includes at least one ultrasound transducer movably coupled to the instrument guide and arranged such that the at least one ultrasound transducer is operable to transmit ultrasound energy to the subject's anatomy and receive echo signals therefrom. The system also includes a processor in communication with the at least one ultrasound transducer and configured to receive the echo signals and identify therefrom a trajectory that extends from the entry location

to a desired region of the subject's anatomy.

[0007] The foregoing and other aspects and advantages of the invention will appear from the following description. In the description, reference is made to the accompanying drawings which form a part hereof, and in which there is shown by way of illustration a preferred embodiment of the invention. Such embodiment does not necessarily represent the full scope of the invention, however, and reference is made therefore to the claims and herein for interpreting the scope of the invention.

BRIEF DESCRIPTION OF THE DRAWINGS

[0008] FIG. 1 is an example of a system for performing trans-cranial procedures using ultrasound imaging guidance, in accordance with the present invention.

[0009] FIGS. 2A and 2B illustrate an example of a mode of operation for the system, in accordance with the present invention.

[0010] FIG. 3 is another example of a system for use in accordance with the present invention.

[0011] FIG. 4 is another example of a system for use in accordance with the present invention.

[0012] FIG. 5 is another example of a system design for use in accordance with the present invention.

[0013] FIG. 6 is another example of a system design for use in accordance with the present invention.

[0014] FIG. 7 is a block diagram illustrating an example of controlling a system for performing trans-cranial procedures using ultrasound imaging guidance, in accordance with the present invention.

[0015] FIG. 8A is a MRI image of a patient with a 1D ultrasound device applied at the right temporal acoustic window.

[0016] FIG. 8B is a 1D brightness-mode display from intracranial ultrasound signal traces.

DETAILED DESCRIPTION OF THE INVENTION

[0017] A system for guiding an interventional medical procedure is provided. The system generally includes a frame that can be positioned on a subject's anatomy. The frame also supports one or more ultrasound transducers that are configured to determine an entry location on the subject's anatomy and a trajectory along which a

medical device or instrument is to be guided.

[0018] The present disclosure provides an approach that utilizes trans-cutaneous ultrasound imaging (e.g., imaging through an intact skull) in combination with a system that may be easily positioned on the head to optimize the placement of interventional instrumentation, such as an extra-ventricular drain ("EVD"). Traditional ultrasound techniques for brain imaging require a burr hole in the skull, which must be enlarged so the ultrasound transducer may touch the dura, thereby bypassing the skull and attaining good acoustic contact with the brain. In contrast, the system described herein does not require a burr hole, and will likely provide more positioning flexibility for difficult cases, such as patients having displaced or distorted ventricles, when the need for guidance is most apparent. The approach is based on development of systems to perform trans-cranial focused ultrasound therapy, wherein new methods for transmitting ultrasound through the skull, including a new shear-mode technique for trans-cranial imaging, may be implemented. While the definition of intricate structures remains challenging, the ventricles can be readily distinguished and characterized through these signals, as will be described below.

[0019] Shown in FIG. 1 is one embodiment of a system **100** that is designed to minimize complexity and, as such, increase safety while performing trans-cranial procedures, such as a ventriculostomy, using ultrasound imaging guidance. The system **100** generally includes a support frame **102**, and an ultrasound transducer assembly **104** and instrument guide **106** coupled to the support frame **102**. The system **100** is configured to be positioned on a portion of a subject's anatomy, for example on a subject's head. Furthermore, the system **100** may be fastened, secured, or otherwise affixed to subject in any number of ways and may be configured with the ability for repositioning while in use.

[0020] The support frame **102** generally may include a planar surface and may be detachably coupled to or positioned against the surface of a target anatomy, such as a skull's outer convexity. In one aspect, the system **100** may be mounted in direct contact with a scalp rather than a skull bone. This design aspect obviates the requirement for an extended skin incision to expose a skull surface. The support frame **102** is also configured such that when it is positioned against the scalp or skull surface, ultrasound signals can be projected from the ultrasound transducers **105** through the skull bone into a desired region in an intracranial space so as to provide, for example, ventricle-

localizing data.

[0021] The ultrasound transducer assembly **104** includes one or more ultrasound transducers **105** arranged such that the location of an anatomical target in the subject, such as a ventricle, can be determined. The ultrasound transducers **105** are also arranged such that a trajectory for a medical device or instrument, such as a catheter or cannula, suitable to reach the anatomical target may be determined and tracked. Coupled to each ultrasound transducer **105** is a guide **108** that extends from an upper surface of the transducer **105**. Each guide **108** may be used to modify the orientation of the respective transducer **105**, thereby modifying a propagation axis of that ultrasound transducer **105** with respect to a subject. In this manner, the ultrasound transducers **105** may be used to identify locations of anatomical targets relative to the instrument guide **106** and base plate **102** such that the medical instrument can be effectively directed to a desired target.

[0022] The instrument guide **106** is preferably an annular structure, such as a tube or lumen, and sized to receive a medical device or instrument, such as a catheter or cannula, or any other interventional instrument or tool. The instrument guide **106** may be configured to provide access to an entry location on the anatomy of a subject, as well as guidance for a medical device or instrument from the entry location to a desired point or region within the subject's anatomy. In this manner, the instrument guide **106** defines a trajectory along which a medical instrument can be introduced into the body of a subject.

[0023] In some configurations, the medical device or instrument received by the instrument guide **106** (not shown in FIG. 1) may be designed to include echogenic features that can facilitate or enhance monitoring during a trans-cranial procedure. This may include tailoring the physical characteristics of the medical device or instrument in a manner that would generate specific ultrasound signatures or readily identifiable ultrasound signals. For example, the medical device or instrument may include textured, patterned, indented, angled, or otherwise irregular surfaces, including, for example, one or more dimples, notches, divots, knurls, ridges, nubs, and the like, or may include materials that are capable of enhancing echogenicity. In some designs, such echogenic features may be configured generally near the tip of the medical device or instrument, although other suitable locations can also be possible.

[0024] Mechanical linkages **112** movably couple the guides **108** to the

instrument guide **106**. In some aspects, the mechanical linkages **112** may be coupled on one end to an annular support **110**, which is slidably coupled to the instrument guide **106,** and on the other end is coupled to the guides **108**. In this configuration, manipulation of guides **108** can adjust the orientation of the transducers **105**, but may also allow for a related adjustment in the orientation of other ultrasound transducers **105**. Specifically, this can occur via the mechanical linkages **112** when the annular support **110** is moved along the instrument guide **106**. In this manner, movement of the medical device or instrument, by way of insertion and guidance of the medical device or instrument through instrument guide **106**, can be actively monitored.

[0025] In the embodiment shown in FIG. 1, system **100** includes an ultrasound transducer assembly **104** composed of three single-channel (1-D) transducers **105** movably coupled to the instrument guide **106** via mechanical linkages **112**, as described above. The instrument guide **106** may be positioned such that the principal axis **114** of system **100** is substantially aligned with the direction of travel of a medical device or instrument, defining an instrument trajectory **116**. The transducers **105** may be oriented such that their respective 1-D propagation vectors can be adjusted to sweep across and monitor their respective two-dimensional regions of interest. As such, the transducers **105** may be configured to adjust from an orientation axis **118**, which is aligned substantially parallel to the principal axis **114**, to a tilted axis **120**, by sweeping over an angle, φ, **122,** either manually , or using motors, which may or may not be precision motors. In some aspects, the orientation or angulation of transducers **105** may be correlated or synchronized with the movement of the medical device or instrument in order to maintain view of specific portions of the device or instrument, such as echogenic features configured therein.

[0026] The transducers **105** may be mechanically coupled to support frame **102** such that a positioning cam (not shown in FIG. 1) may allow for accurate and precise angulations of the transducers **105**, with pivot points near the scalp contact. In some configurations, the transducers **105** may have apertures that are weakly geometrically focused (e.g. F-number between 4.0 and 6.0), or planar apertures having an active area of, for example, 3 cm^2. In addition, the transducers **105** may operate at a center frequencies between, for example, 0.5 and 1.0 MHz with fractional bandwidths approaching 60%. Moreover, the transducers **105** may be commercially procured or assembled in-house with silver-electroded PZT piezoceramic elements encased in

polymethyl methacrylate (PMMA) housing and backed by tungsten-impregnated polymer.

[0027] It is envisioned that additional features and elements not explicitly shown in FIG. 1 may also be included into system **100**. For instance, standoff layers (not shown) may be designed and incorporated into system **100** in a manner that facilitates acoustical coupling between the transducers **105** and the subject's anatomy, as well as allows for the varied positioning of the transducers **105**. Specifically, the optional standoff layers may be preferably composed of materials with appropriate ultrasound transmission properties, such as polyvinyl alcohol cryogel (PVA-C). Additionally, potentiometers (not shown in FIG. 1) may also be incorporated for electronically encode positions.

[0028] An illustration of one mode of operation for system **100** is shown in FIGS. 2A and 2B. Specifically, a coordinated angulation of the transducers **105** in a direction away from the principal axis **114** of system **100** is shown. For instance, the transducers **105** are angulated by adjusting the orientation of guides **108**, either by directly manipulating the guides **108** or by way of displacement of the annular support **110** along the instrument guide **106**. By design, the three scanning planes of the transducers **105** can intersect at a line coincident with a point **200** on the instrument trajectory **116**.

[0029] In some aspects, system **100** can also be configured such that an additional angulated steering direction can be provided to all three single-channel (1-D) transducers **105**. For instance, in addition to angulation in the plane of the trajectory **116**, the transducers **105** can be configured to have freedom of motion to angulate (either manually or by using motors) "out-of-plane." The advantages of this design include the availability of added spatial information.

[0030] The system **100** of FIG. 1 may also be configured such that the single-channel (1-D) transducers **105** in the transducer assembly **104** are oriented such that their imaging planes are orthogonal to each other. It is also noted, however, that this orthogonal scan plane orientation can be achieved with any number of transducers **105** and not just three. The advantages of this design include ease of user interpretation and the potential for mechanical and electronic simplicity.

[0031] In some configurations, the coupling of the transducers **105** to the frame **102** may define the entry point for a medical device or instrument on the skull and the

instrument trajectory **116**. It is possible in this configuration that the arrangement of the instrument trajectory **116** does not enable hitting the target based on the initial positioning of the system **100**. If that is the case, the operator can move the system **100** until it registers. Alternatively, the support frame **102** can have an adjustment capability to tilt the axis of the instrument guide **106** and the instrument trajectory **116** so that the entry point can still be used, but with a tilted instrument trajectory **116**. This approach may require tilting of the transducers **105**, which may require more complex linkages or mechanical controls. In one configuration, the transducers **105** can be capable of moving vertically relative to the plate **102** while keeping the linkage point fixed so the arc displacement still stays in geometric synch.

[0032] In another embodiment of the current invention, illustrated in FIG. 3, a variation of system **100** includes a transducer assembly **104** composed of multiple-channel (2-D) transducer arrays **302** instead of single-channel (1D) transducers **105**. This embodiment allows for electronic scanning of the respective 2-D regions-of-interest of the transducers **302**. The advantages of this design include the lack of moving parts (the transducers **302** are stationary with respect to the frame **102** but angulated toward the instrument trajectory **116** and improved scanning speed relative to the 1-D transducer configuration in FIG. 2.

[0033] In yet another embodiment of the current invention, illustrated in FIG. 4, a variation of system **100** includes more single-channel (1-D) transducers **105** than are utilized in the configuration of the transducer assembly **104** shown in FIG. 1. The advantages of this design include the additional spatial information that is available without repositioning system **100**.

[0034] In yet another embodiment of the current invention, illustrated in FIG. 5, a variation of system **100** includes a transducer assembly **104** that includes a substantially hemispherical cap **502**, on which a plurality of single-channel (1-D) transducers **105** are arranged in different rows such that each transducer **105** extends radially from the instrument guide **106** insertion point **504**. Electronic selection of the transducers **105** may variably control the 1-D projection and the depth of scan, and thus may not necessitate electronically phased steering. The advantages of this design include the lack of moving parts (the transducers **105** are stationary with respect to the support frame **102**) and improved scanning speed relative to the transducer assembly **104** configuration illustrated in FIG. 1.

[0035] In yet another embodiment of the current invention, illustrated in FIG. 6, a variation of system **100** includes a transducer assembly **104** that includes two multiple-channel (2-D) transducer arrays **602**. The two transducers **602** are mounted on the frame **102** diametrically opposite each other and oriented to scan in planes that cut across the instrument trajectory **116**. The planes are selected by manual or via motor-driven angulation of the transducers **602** away and toward the instrument trajectory **116**. The advantage of this design includes a full volumetric scan of the entire region-of-interest.

[0036] In yet another embodiment, the system **100** may also include a system controller **710** that controls operation of system **100**, with and/or without manual assistance or input from a human operator, as shown in FIG. 7. The system controller **710** generally includes a processor **712** configured to communicate with a multi-channel transmitter **714** and a multi-channel receiver **716**. Multi-channel transmitter **714** receives driving signals from processor **712** and, in turn, directs an ultrasound transducer **105** to generate ultrasound energy. Multi-channel receiver **716** receives acoustic signals during and/or after sonications and relays these signals to processor **712** for processing. In one embodiment of the present invention, ultrasound driving signals may be transmitted in a manner consistent with a longitudinal mode and/or a shear wave mode. Although for the sake of clarity FIG. 7 only shows one communication between multi-channel transmitter **714**, multi-channel receiver **716** and a single transducer **105**, it is implicit that additional communications are possible and/or necessary when the system **100** is configured to include multiple transducer **105** in the ultrasound transducer assembly **104**.

[0037] Processor **712** may be designed to process acoustic signals and construct any number of images of, for example, a subject anatomy or a location of a medical instrument with respect to the subject anatomy in 1D, 2D or 3D, as desired. By way of example, acoustic signals from a far surface of a skull or skull base may be used as a reference, allowing the production of an accurate and real-time dynamic visual image of a medical instrument tip location. Using geometric and time-of-flight analysis, the magnitude and direction of the medical instrument tip shifts may be determined.

[0038] Processor **712** may also be configured to communicate with a memory **720** for storing and retrieving data, and may be able to relay data via an output **718**. Output **718** may be designed to take any desired shape or form, including a

visualization system for displaying images of, for example, a subject anatomy or a medical device or instrument, or any other interventional devices, about or within the subject anatomy. In one aspect, a visualization system may receive a real-time feed of the encoded A-mode ultrasound signals, although other visualization schemes may be possible. For example, a likely strategy may involve a translucent rendering of "scan planes" showing the ventricle surfaces and a position of a medical device or instrument, such as a cannula or catheter.

[0039] System controller **710** may also include a position controller **722** which is in communication with processor **712**. Position controller **722** may be configured to control the positioning and/or orientation of transducers **105** in the ultrasound transducer assembly **104** or a medical device or instrument, such as a cannula or catheter, by directing, for example, servos or motors (not shown in FIG. 1) during operation of system **100**. Although for the sake of figure clarity FIG. 7 only shows one communication of the position controller **722** with a single transducer **105**, it is implicit that additional communications are also possible between position controller **722** and other transducers **105**, or any other device, configured with system **100** in accordance with the present invention.

[0040] During operation, system controller **710** may adjust the driving signals in response to the acoustic signals received by the multi-channel receiver **716**. For example, the phase and/or amplitude of the driving signals may be adjusted so that ultrasound energy is more efficiently transmitted through, for example, a skull of subject and into the target volume-of-interest (VOI). Furthermore, the acoustic signals may also be analyzed to determine whether and how the extent of a focal region should be adjusted. In one aspect, the actuation signal may include repeated pulses of high-voltage bursts with inter-burst periodicity tuned to match the fundamental operating frequency of the transducers (for example ±180 V, PRP=100-200 ms, Duty cycle = 0.0015-0.0030% based on f_c=1 MHz).

[0041] Backscattered ultrasound signals may be processed by processor **712** to isolate and accentuate signals arising from a VOI containing, for example, a ventricle to be catheterized. A standard method for producing ultrasound A-mode signals may be implemented (viz., time windowing, transducer PSF cross-correlation, time-gain compensation, nonlinear compression, rectification, demodulation, and noise rejection), including temporal and spectral filters appropriate to the operating conditions (i.e., with

consideration of the ultrasound interaction characteristics of periosteal, skull, and intracranial tissues). Position encoded A-mode data may be supplied to a visualization engine for further processing and display.

[0042] Turning now to FIG. 8A, an example of a pre-operative MRI image of a patient having illustrated thereon an example of a trajectory towards a ventricle is shown. The line corresponds to the approximate trajectory of an ultrasound signal, demonstrating the lateral interface of the right lateral ventricle to be at a distance of approximately 7.0 cm from the ultrasound transducer aperture. A representative A-mode ultrasound signal acquired along this line is shown in FIG. 8B, demonstrating a prominent peak (arrow) at the expected location of the lateral ventricle boundary.

[0043] In summary, external ventricular drains ("EVD") are often placed to relieve intracranial pressure due to cerebrospinal fluid excess generally caused by subarachnoid hemorrhage or traumatic brain injury. Errors in placement are a chronic, albeit low level, concern in neurosurgical practice. While reported data are limited and inconsistent, the rate of catheter misplacement is high. In practice, most EVD catheters are inserted “free-hand” at the bedside, resulting in reported rates of initial catheter misplacement as high as 50%.

[0044] To reduce the resultant damage to brain tissue, four approaches have been evaluated in the past two decades: a) mechanical guides for the cannula, b) neurosurgical instrument tracking and anatomic registration systems, c) direct CT guidance, and d) ultrasound guidance using a probe inserted through an access hole in the skull to contact the dura. These have not been widely adopted due to: performance and flexibility challenges (a), cost and complexity (b,c), or need for an additional “burr hole” in the skull (d). There is general agreement that existent technical approaches to improve EVD guidance are too complex and time intensive to justify their use.

[0045] Therefore, the present disclosure describes various embodiments of a system for use in interventional procedures. Specifically, the approach of the present disclosure aims to facilitate, for example, correct placement of medical instrumentation under a range of clinical conditions, offering superior accuracy without the deficiencies of prior techniques. For instance, capabilities afforded by the system, as described herein, can be used to assist a clinician in placing, say, a cannula in the correct position and orientation during an EVD procedure by way of ultrasound information generated using integral ultrasound transducers therein.

[0046] Further advantages afforded by the present disclosure include enabling a clinician or other health care professional to be confident about the particulars of a subject's anatomy via characteristic ultrasound signals or signatures obtained using a system, as described, as well as the medical procedure in progress. For example, if say ventricles appear "normal" on ultrasound images obtained using a system, as described, a clinician may be inclined to continue performing the intervention undertaken. By contrast, if anatomical features are not found normal, a clinician may be informed and inclined to pursue other procedures or protocols, such as reviewing recent radiologic examinations to better localize a desired target, or proceed freehand, or use a "full-deck" needle guidance, for example, using the Brainlab system.

[0047] The present invention has been described in terms of one or more preferred embodiments, and it should be appreciated that many equivalents, alternatives, variations, and modifications, aside from those expressly stated, are possible and within the scope of the invention.

CLAIMS

What is claimed is:

1. An ultrasound system for guiding a medical instrument relative to a subject's anatomy, comprising:

a support frame configured to be positioned on the subject's anatomy, the support frame defining an entry location for a medical instrument;

an instrument guide coupled to the support frame and having an annular portion coupled on one end to the entry location for the medical instrument and configured to receive the medical instrument such that the medical instrument can be guided to the entry location;

at least one ultrasound transducer movably coupled to the instrument guide and arranged such that the at least one ultrasound transducer is operable to transmit ultrasound energy to the subject's anatomy and receive echo signals therefrom; and

a processor in communication with the at least one ultrasound transducer and configured to receive the echo signals and identify therefrom a trajectory that extends from the entry location to a desired region of the subject's anatomy.

2. The system of claim 1, further comprising at least one mechanical linkage movably coupling the at least one ultrasound transducer to the instrument guide.

3. The system of claim 2, further comprising an annular support slidably coupled to an outer surface of the instrument guide, wherein the at least one mechanical linkage is coupled on one end to the annular support and coupled on another end to the at least one ultrasound transducer.

4. The system of claim 1, wherein the at least one ultrasound transducer is configured to transmit ultrasound energy along a propagation axis in a different scanning plane.

5. The system of claim 4, wherein the support frame is configured such that the different scanning planes of at least two of the transducers are orthogonal.

6. The system of claim 4, wherein the at least one ultrasound transducer is coupled to the instrument guide such that the propagation axis of the at least one ultrasound transducer extends radially from the entry location.

7. The system of claim 1, wherein the support frame is configured to be detachably coupled to the subject's anatomy.

8. The system of claim 1 further comprising a controller in communication with the at least one ultrasound transducer, the controller configured to direct the at least one ultrasound transducer to transmit ultrasound energy through a bone.

9. The system of claim 8, wherein the controller is configured to direct the at least one ultrasound transducer to transmit the ultrasound energy through a skull bone.

10. The system of claim 1, wherein the at least one ultrasound transducer comprises at least one ultrasound transducer array that is capable of performing synchronized ultrasound beam steering.

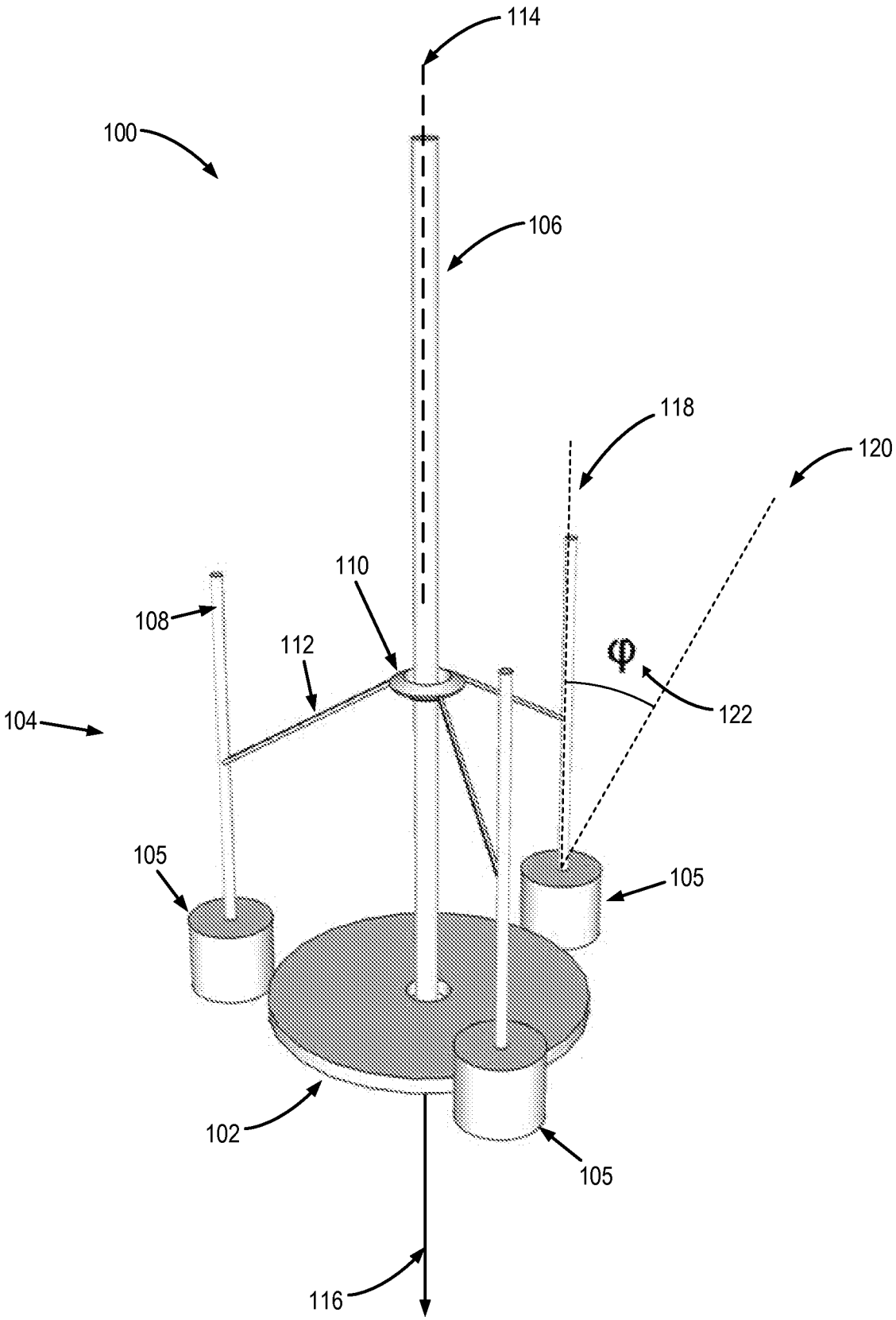

FIG. 1

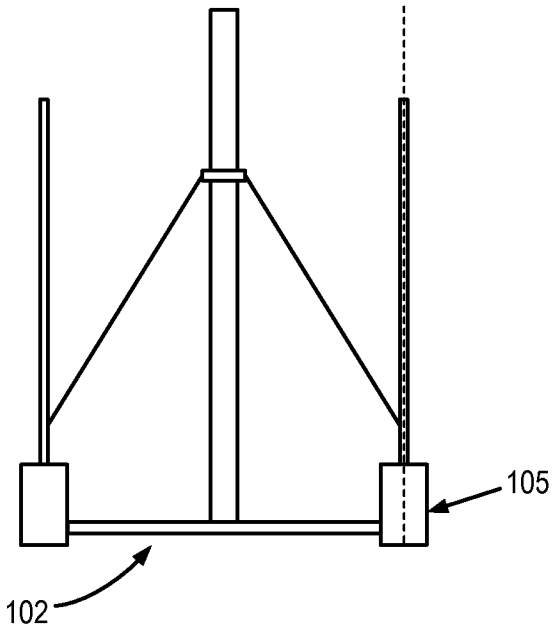

FIG. 2A

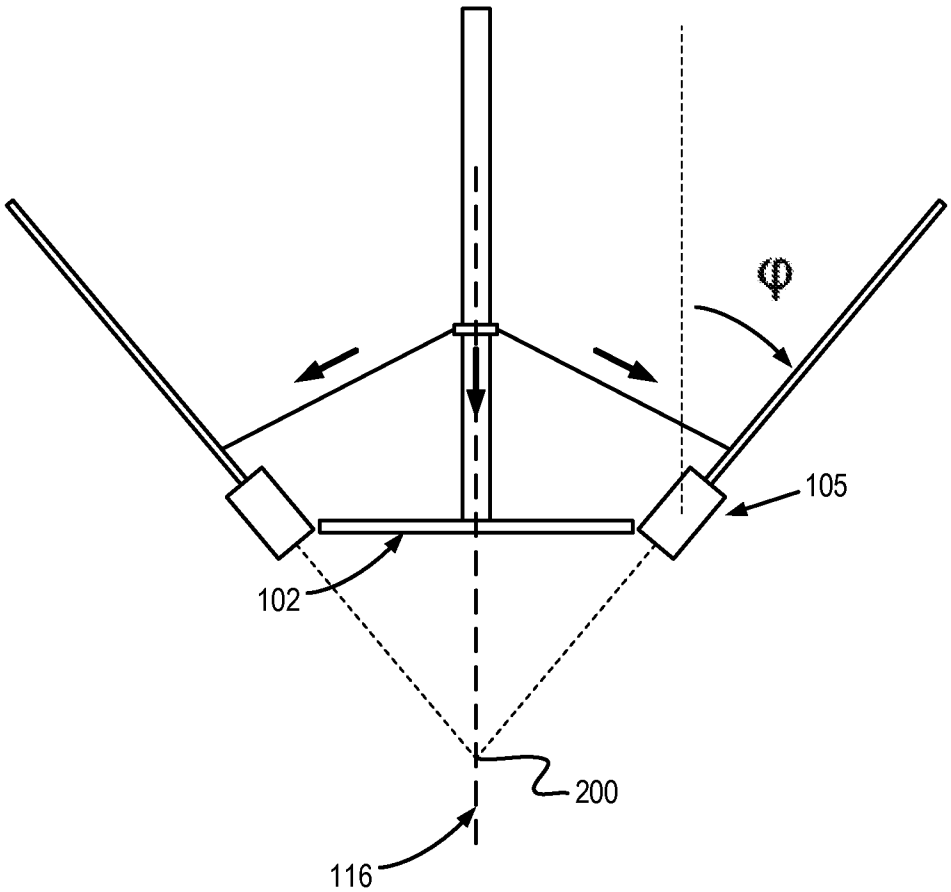

FIG. 2B

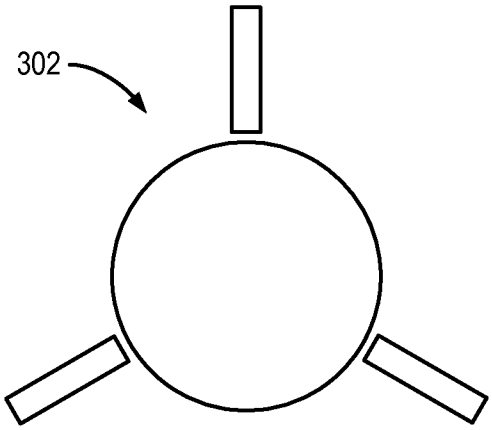

FIG. 3

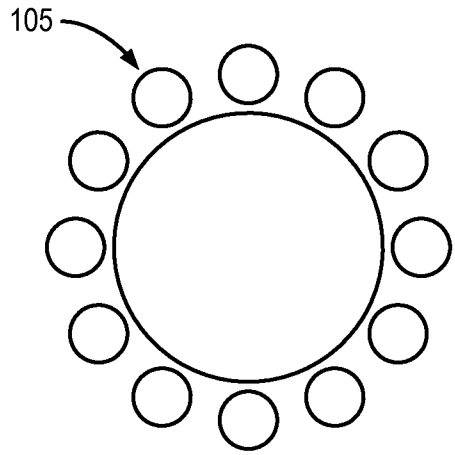

FIG. 4

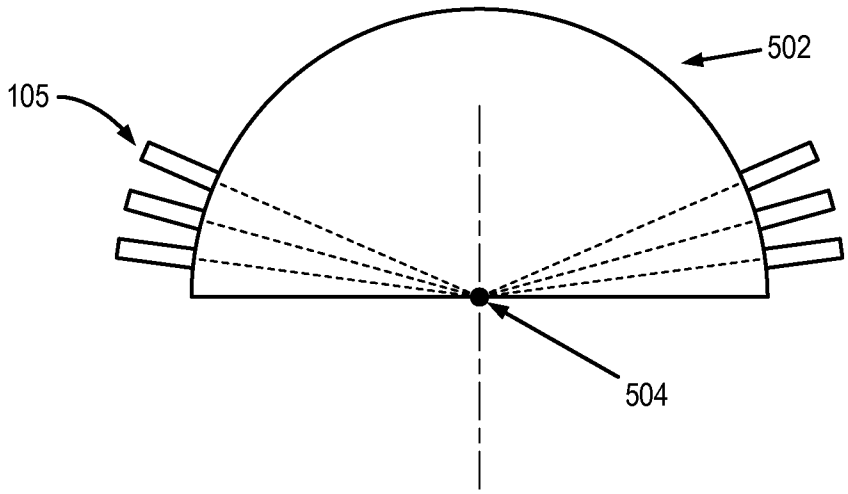

FIG. 5

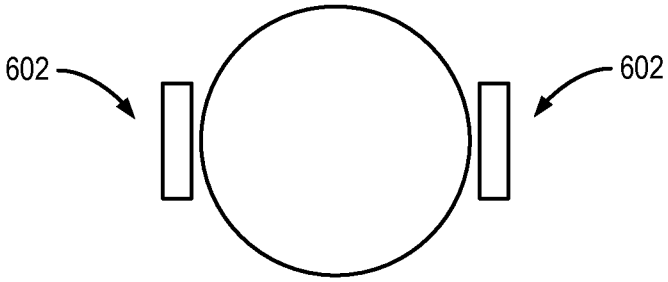

FIG. 6

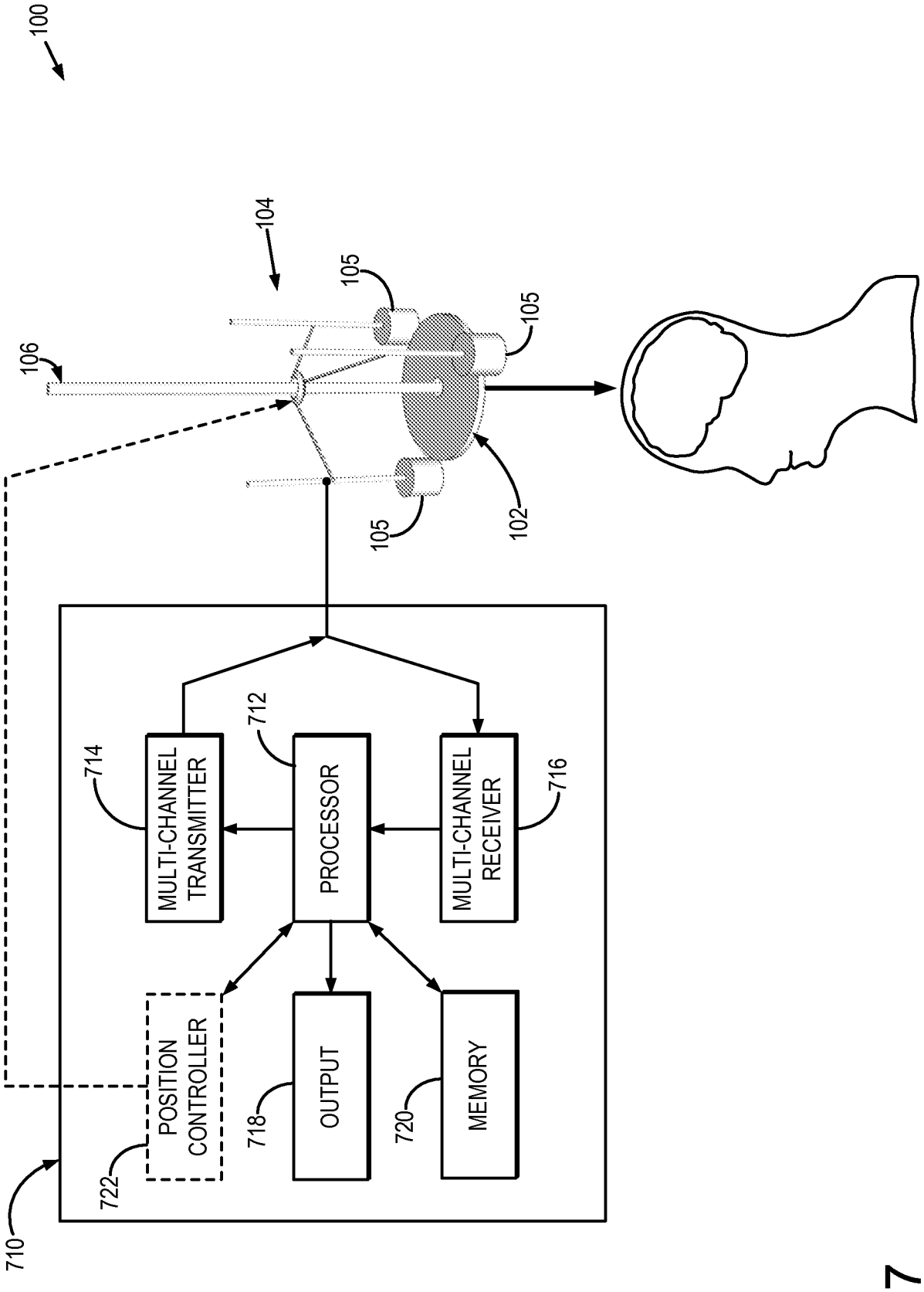
100
104
105
105
106
105
102
710
712
714
716
718
720
722
MULTI-CHANNEL TRANSMITTER
PROCESSOR
MULTI-CHANNEL RECEIVER
POSITION CONTROLLER
OUTPUT
MEMORY

FIG. 7

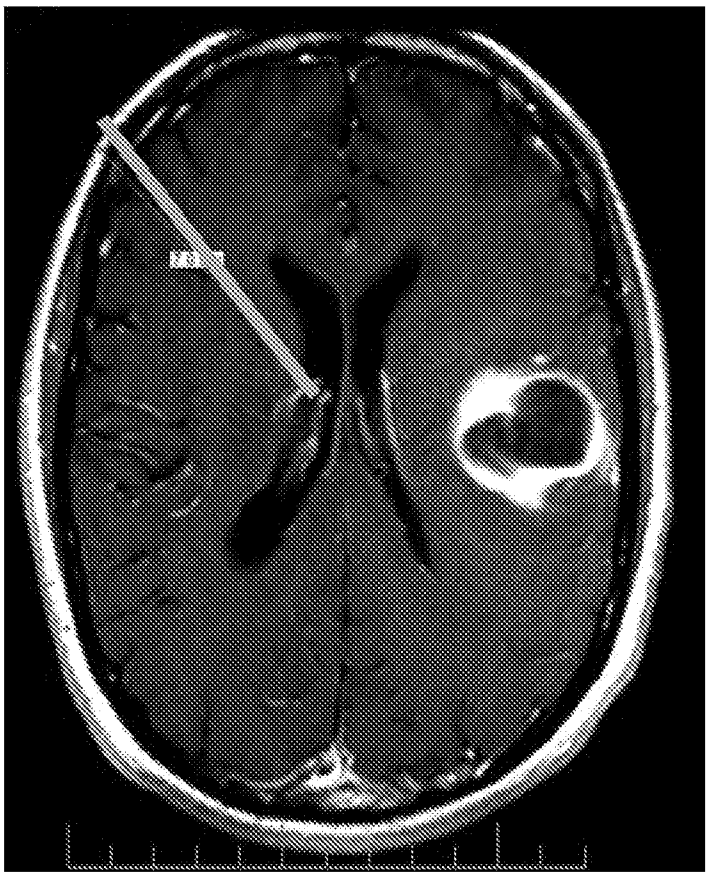

FIG. 8A

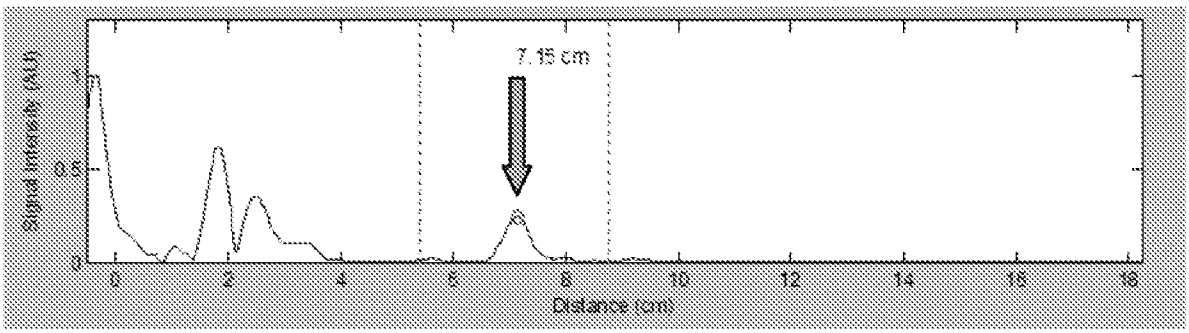
7.15 cm
Signal Intensity (AU)
1
0.5
0
0
2
4
6
8
10
12
14
16
18
Distance (cm)

FIG. 8B

INTERNATIONAL SEARCH REPORT

International application No.
PCT/US14/63079

A. CLASSIFICATION OF SUBJECT MATTER
IPC(8) - A61B 5/107, 8/14 (2015.01)
CPC - A61B 8/0808, 8/42, 19/5244
According to International Patent Classification (IPC) or to both national classification and IPC

B. FIELDS SEARCHED

Minimum documentation searched (classification system followed by classification symbols)
IPC(8) - A61B 5/107, 8/00, 8/14 (2015.01)
CPC - A61B 8/00, 8/0808, 8/42, 8/4245, 19/5244; USPC - 600/415, 424, 459

Documentation searched other than minimum documentation to the extent that such documents are included in the fields searched

Electronic data base consulted during the international search (name of data base and, where practicable, search terms used)
PatSeer (US, EP, WO, JP, DE, GB, CN, FR, KR, ES, AU, IN, CA, INPADOC Data); Google/Google Scholar; Proquest; IP.com; ultrasonic, ultrasound, ultra-sonography, echo-tomography, bone, skull, cranium, transducer, support frame, support, frame, slide, slidably, instrument, guide, non-invasive, processor, computer, laptop, linkage, annular, orthogonal, kirby vosburgh, phillip white

C. DOCUMENTS CONSIDERED TO BE RELEVANT

Category*	Citation of document, with indication, where appropriate, of the relevant passages	Relevant to claim No.
X -- Y	US 2011/0301451 A1 (ROHLING, R) December 8, 2011; abstract; figures 2, 5, 9, 12; paragraphs [0029], [0031]-[0033], [0045], [0063]	1-2, 4, 6, 7 --- 5, 8-10
Y	US 2003/0181801 A1 (LASSER, RS et al.) September 25, 2003; abstract; figure 8; paragraph [0006]	5
Y	US 2010/0268088 A1 (PRUS, O et al.) October 21, 2010; figure 2; paragraphs [0002], [0006]-[0007], [0024]	8-10
A	US 5,660,185 A (SHMULEWITZ, A et al.) August 26, 1997; entire document	1-10
A	US 2002/0156376 A1 (WANG, SP et al.) October 24, 2002; figure 1	1-10
A	WO 1996/011624 (ST. LOUIS UNIVERSITY) April 25, 1996; entire document	1-10

☐ Further documents are listed in the continuation of Box C. ☐

* Special categories of cited documents:
"A" document defining the general state of the art which is not considered to be of particular relevance
"E" earlier application or patent but published on or after the international filing date
"L" document which may throw doubts on priority claim(s) or which is cited to establish the publication date of another citation or other special reason (as specified)
"O" document referring to an oral disclosure, use, exhibition or other means
"P" document published prior to the international filing date but later than the priority date claimed
"T" later document published after the international filing date or priority date and not in conflict with the application but cited to understand the principle or theory underlying the invention
"X" document of particular relevance; the claimed invention cannot be considered novel or cannot be considered to involve an inventive step when the document is taken alone
"Y" document of particular relevance; the claimed invention cannot be considered to involve an inventive step when the document is combined with one or more other such documents, such combination being obvious to a person skilled in the art
"&" document member of the same patent family

Date of the actual completion of the international search	Date of mailing of the international search report
14 January 2015 (14.01.2015)	09 FEB 2015
Name and mailing address of the ISA/US Mail Stop PCT, Attn: ISA/US, Commissioner for Patents P.O. Box 1450, Alexandria, Virginia 22313-1450 Facsimile No. 571-273-3201	Authorized officer: Shane Thomas PCT Helpdesk: 571-272-4300 PCT OSP: 571-272-7774