JOSEPH L. PILLSBURY.

Improvement in Hydrants.

No. 115,637. Patented June 6, 1871.

Fig: 2.

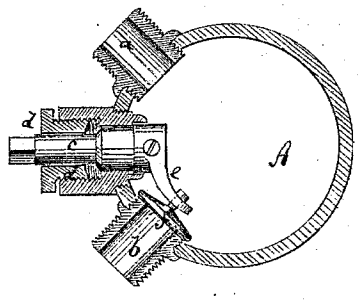

Fig: 1.

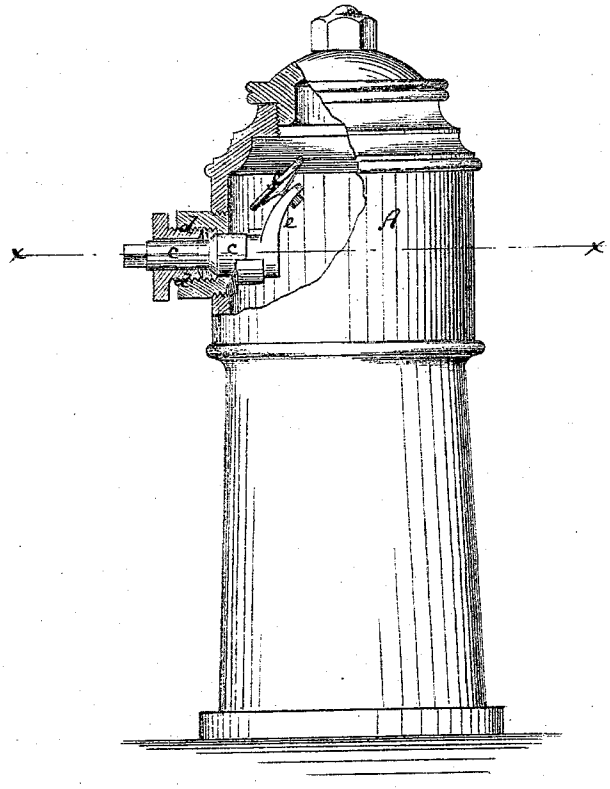

Witnesses:

Chas. Nida.

Wm. H. C. Smith.

Inventor:

J. L. Pillsbury.

Per Munn & Co

Attorneys.

AM. PHOTO-LITHOGRAPHIC CO. N.Y. (OSBORNE'S PROCESS.)

UNITED STATES PATENT OFFICE.

JOSEPH L. PILLSBURY, OF COLUMBUS, OHIO.

IMPROVEMENT IN HYDRANTS.

Specification forming part of Letters Patent No. 115,637, dated June 6, 1871.

To all whom it may concern:

Be it known that I, JOSEPH L. PILLSBURY, of Columbus, in the county of Franklin and State of Ohio, have invented a new and Improved Hydrant-Head; and I do hereby declare that the following is a full, clear, and exact description thereof, which will enable others skilled in the art to make and use the same, reference being had to the accompanying drawing forming part of this specification, in which—

Figure 1 represents a side elevation, partly in section, of a hydrant having my improvement. Fig. 2 is a horizontal section of the same taken on the line *x x*, Fig. 1.

Similar letters of reference indicate corresponding parts.

This invention has for its object to provide hydrants having double discharge-nozzles with a convenient valve, whereby either one of the nozzles can be closed. The invention consists in the application to the hydrant of a swiveled lever carrying a disk or valve, whereby either one of the nozzles can be easily closed.

A in the drawing represents the body of the hydrant, having two nozzles, *a* and *b*, to connect with two lines of hose. Equidistant from the axes of both nozzles is swiveled, in the head A, a stem, *c*, which is packed by a stuffing-box, *d*, and can be turned by means of a key or handle, which can be applied to its outer end. The inner end of the stem *c* carries a lever, *e*, to which a valve or disk, *f*, is secured. This valve or disk can, by turning the stem, be brought opposite the inner end of either nozzle to close the same, as in Fig. 2, or can be held clear of both, as in Fig. 1.

When, in the ordinary double hydrant, one hose is secured, the second can only be applied by stopping the entire supply of water by the main cock, as otherwise the force of the water would prevent the attachment of the second hose. By the use of my invention the second nozzle could be closed by the valve *f* when the hose is to be attached, while the stream through the other hose will not be interrupted.

In case a hose bursts, which is frequently the case, the valve *f* is immediately moved to prevent more water from flowing to it, while the other hose can be used without hindrance. The interruptions often fatal to the success of stopping the fire are thus made unnecessary.

Having thus described my invention, I claim as new and desire to secure by Letters Patent—

In combination with a hydrant having the two nozzles *a b*, the stem *c*, swiveled at an equal distance between said nozzles, and provided with an arm, *e*, and disk *f* at the inner end, as and for the purpose specified.

JOSEPH L. PILLSBURY.

Witnesses:

J. R. ARMSTRONG,

HORATIO N. P. DOLE.