Dec. 10, 1963 M. S. MEADER 3,114,038

ROOM DEODORIZER WITH CUP AND TOOTHBRUSH STERILIZING MEANS

Filed Jan. 19, 1962 4 Sheets-Sheet 1

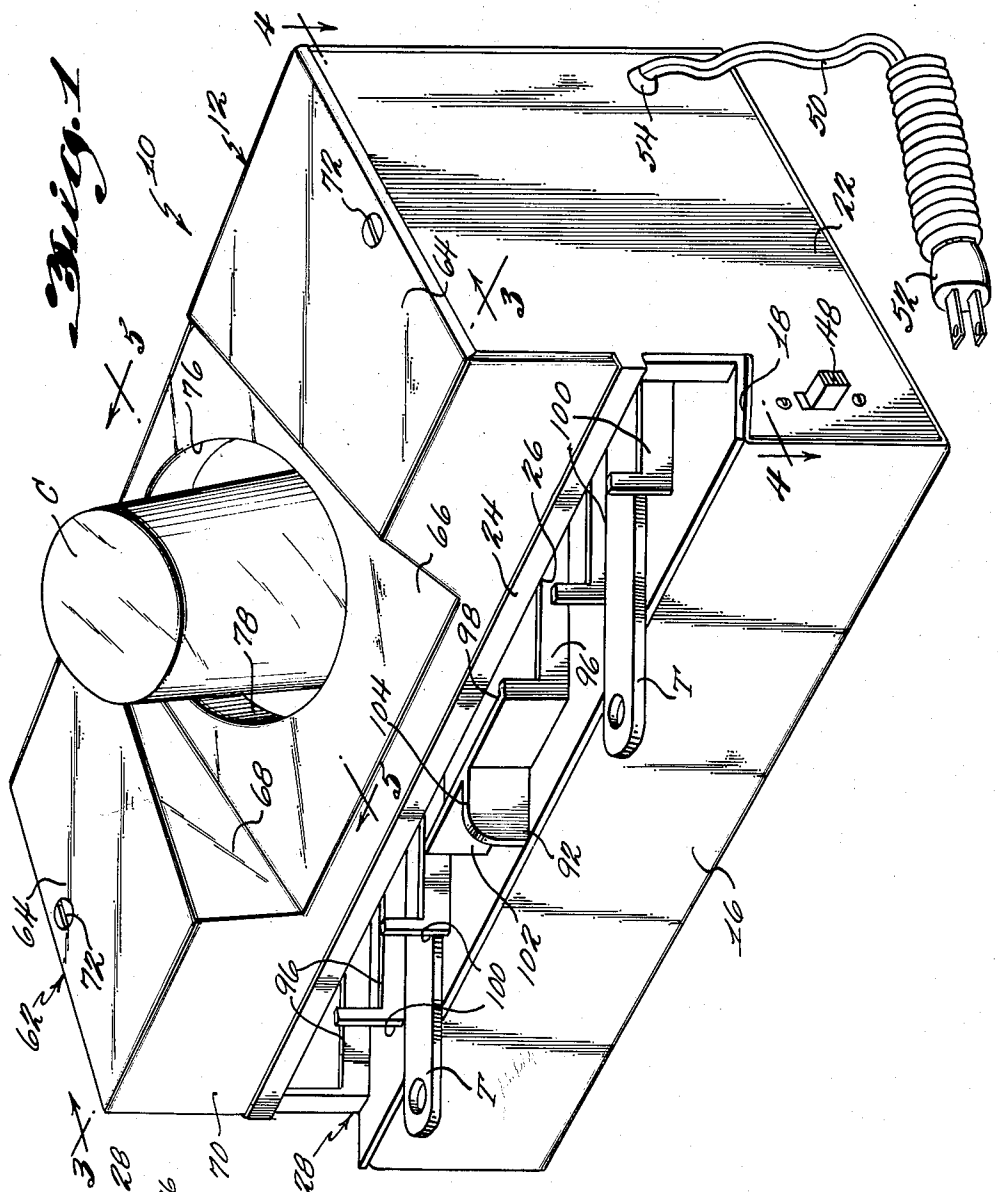

Fig. 1

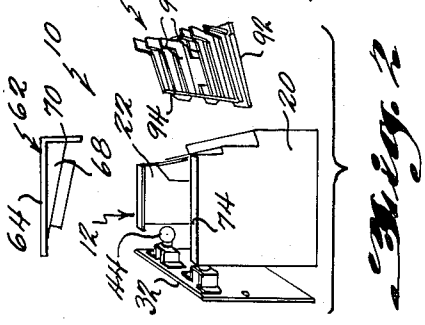

Fig. 12

INVENTOR.
MALCOLM S. MEADER
BY
Cushman, Darby & Cushman
ATTORNEYS

Dec. 10, 1963 M. S. MEADER 3,114,038

ROOM DEODORIZER WITH CUP AND TOOTHBRUSH STERILIZING MEANS

Filed Jan. 19, 1962 4 Sheets-Sheet 2

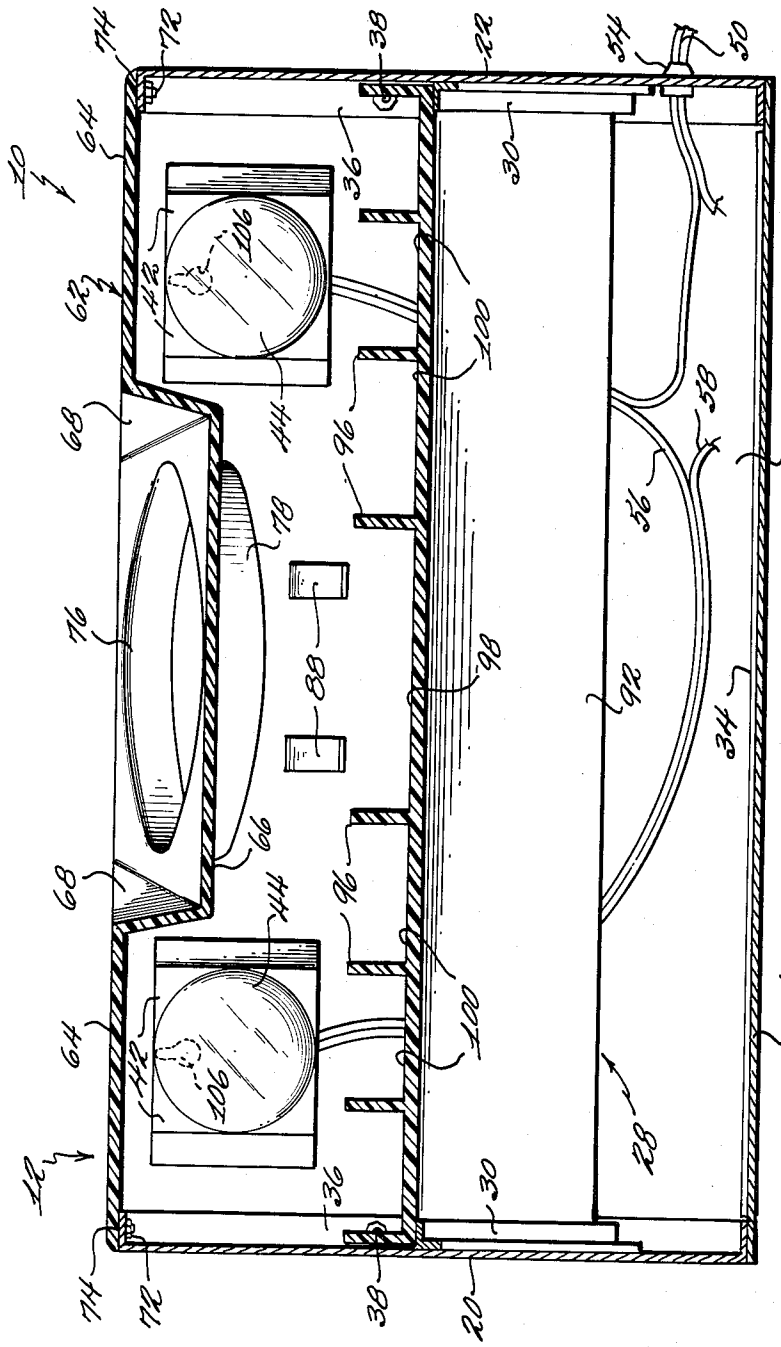

Fig. 3

INVENTOR.
MALCOLM S. MEADER
BY
Cushman, Darby & Cushman
ATTORNEYS

Dec. 10, 1963 M. S. MEADER 3,114,038

ROOM DEODORIZER WITH CUP AND TOOTHBRUSH STERILIZING MEANS

Filed Jan. 19, 1962 4 Sheets-Sheet 3

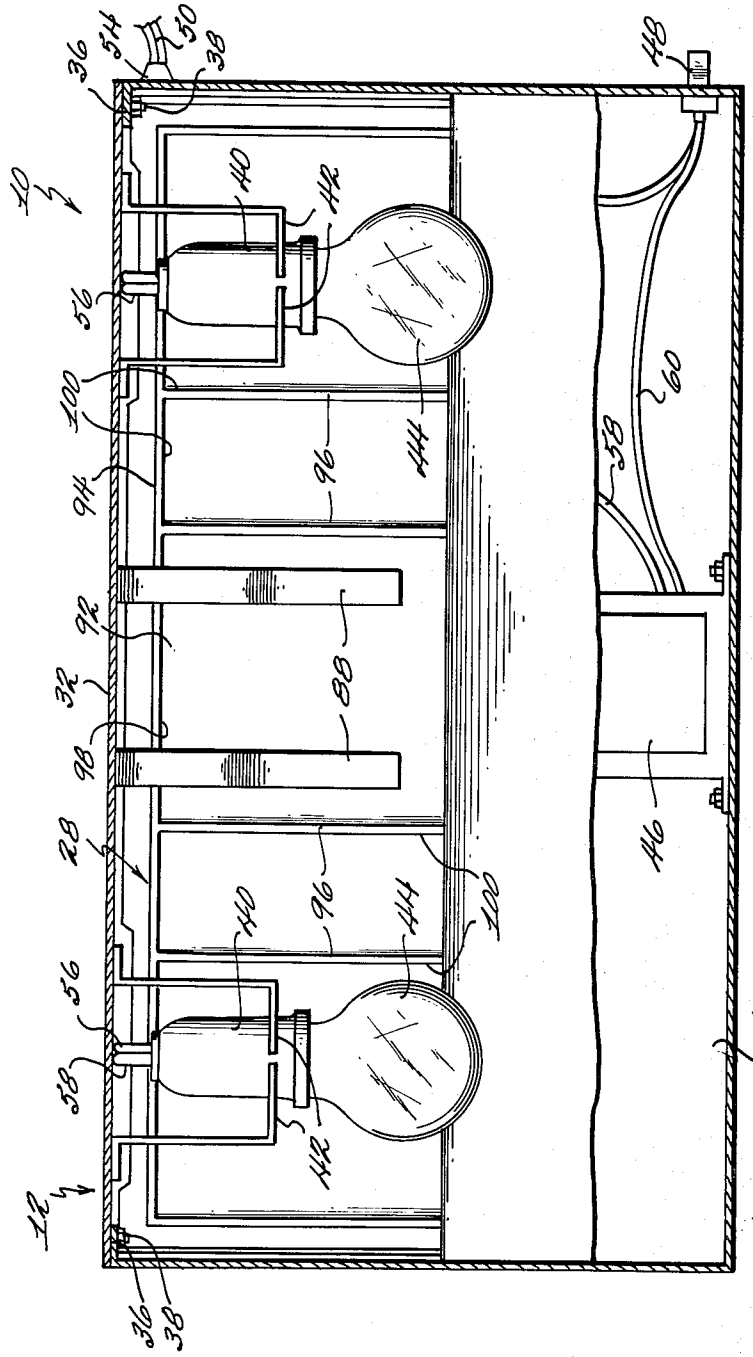

Fig. 4

INVENTOR.
MALCOLM S. MEADER
BY
Cushman, Darby & Cushman
ATTORNEYS

Dec. 10, 1963 M. S. MEADER 3,114,038

ROOM DEODORIZER WITH CUP AND TOOTHBRUSH STERILIZING MEANS

Filed Jan. 19, 1962 4 Sheets-Sheet 4

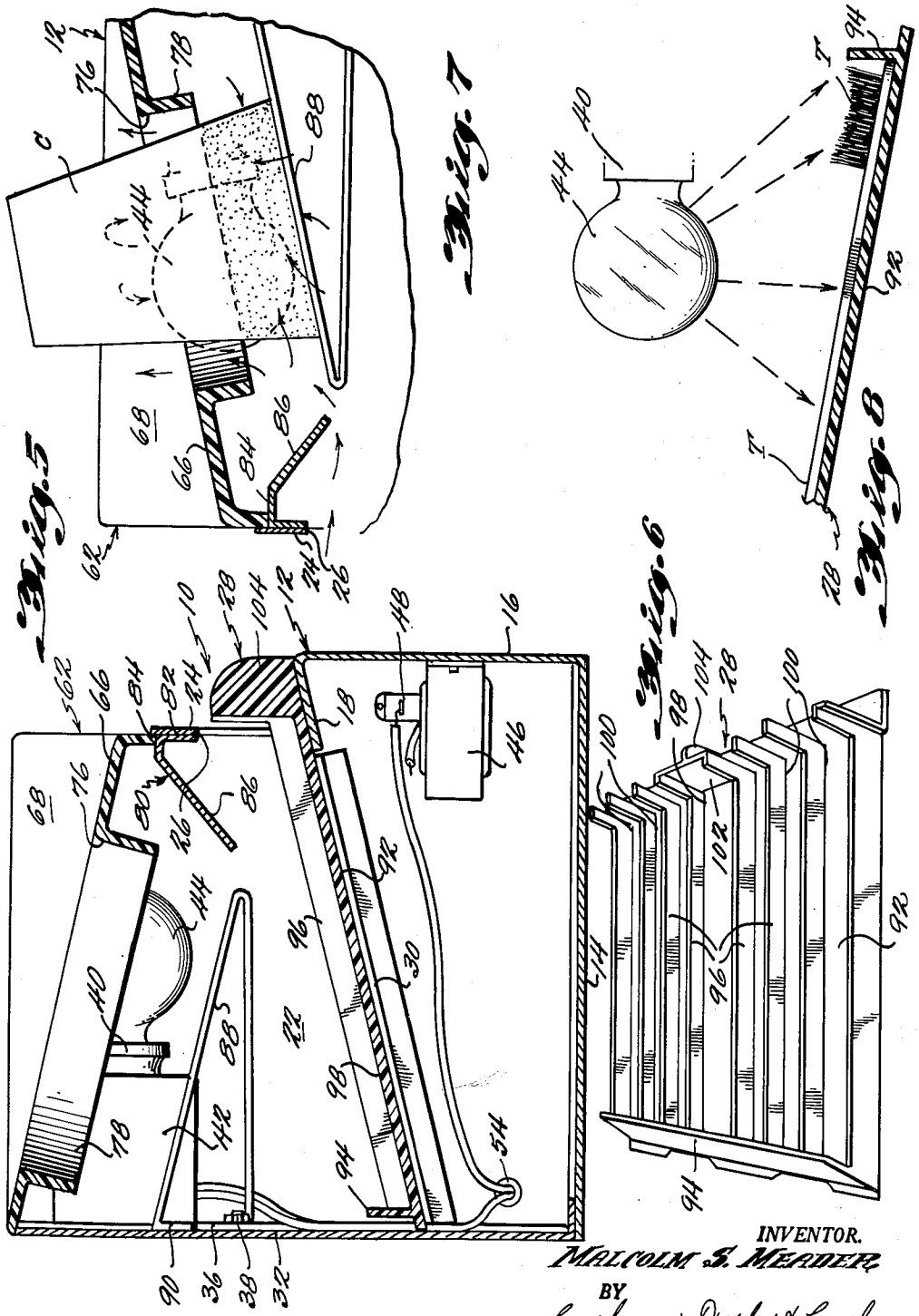

Fig. 5

Fig. 7

Fig. 8

Fig. 9

INVENTOR.
MALCOLM S. MEADER
BY
Cushman, Darby & Cushman
ATTORNEYS

United States Patent Office 3,114,038 Patented Dec. 10, 1963

3,114,038

ROOM DEODORIZER WITH CUP AND TOOTHBRUSH STERILIZING MEANS

Malcolm S. Meader, 3301 Woodbine St., Chevy Chase, Md.

Filed Jan. 19, 1962, Ser. No. 167,261
10 Claims. (Cl. 250—51)

This invention relates to the sterilization of articles and deodorization of air, and more particularly to a device for supporting and sterilizing articles such as a plurality of toothbrushes, a drinking container, and/or the like, and for deodorizing the surrounding air.

The present device utilizes as a sterilizing and deodorizing source electrically actuated lamps or bulbs of the type adapted to emit electromagnetic waves of a germicidal frequency and to generate a gas capable of deodorizing air diffused therewith. Lamps or bulbs of this type are well-known and one embodiment thereof is produced by Westinghouse Electric Corporation under the trademark Sterilamp as disclosed in the Westinghouse publication, "Sterilamp Germicidal Ultraviolet Tubes and their Application." As set forth in the above-mentioned publication, lamps of this type have been used in a variety of different applications, both for personal protection, product protection, animal protection and air duct irradiation. The patented literature contains numerous proposals of devices utilizing lamps of the type mentioned above for sterilizing various articles and for deodorizing room air.

One of the most concentrated areas needing sterilization and deodorization in any dwelling place is the bathroom. There have been many proposals and actual devices produced commercially to, in some way, alleviate this condition utilizing as the sterilization and deodorization source lamps of the type mentioned above. For example, lamps of this type have been mounted in fixtures in the ceiling or on the upper portion of the wall which will serve to emit sterilizing rays in the upper portion of the room and to generate a germicidal deodorizing gas, such as ozone, which will diffuse with the air throughout the room.

In general it can be stated that devices of this type, while serving to freshen the air, do not have the ability to completely sterilize those articles in the room which require a concentrated dosage of the germicidal rays in order to effect complete sterilization. Efforts in this regard have also been proposed and indeed some devices have been actually produced. For example, ultraviolet rays adapted to impinge upon a toilet seat when disposed in its raised position have been utilized to good advantage.

Of the articles contained in most bathrooms, the two which present the most severe conditions requiring sterilization are toothbrushes and drinking containers. The drinking containers in the bathroom are usually used by several different people, several times each day; and toothbrushes are likewise frequently used. Both of these articles may sometimes constitute aggravated carriers of germs which, due to their frequency of use may be undesirably spread among the different occupants of the dwelling.

There have been numerous proposals in the patented literature dealing with the sterilization of toothbrushes by the use of germicidal lamps. In general, the devices proposed have embodied closed housings similar to medicine cabinets and the like in which the toothbrushes are stored for sterilization. These devices have the disadvantage that they require considerable space, or alternatively, severely limit the amount of medicine cabinet space provided, and do not provide for convenient access to the toothbrushes. Moreover, where a closed housing is utilized to sterilize articles the cost of the device is

increased by the necessity to provide parts such as doors, drawers, trays or the like which must be frequently and easily moved. Finally, a closed housing structure prevents the diffusion of the deodorizing gas generated by the lamps into the surrounding air to effect deodorization of the room.

Accordingly, an object of the present invention is the provision of a device for supporting and sterilizing articles such as tooth brushes, drinking containers and/or the like in readily accessible positions and for deodorizing the surrounding air.

Another object of the present invention is the provision of a device of the type described which is capable of rapidly and completely sterilizing the articles supported thereby.

Another object of the present invention is the provision of a device of the type described which functions as a convenient night light.

A further object of the present invention is the provision of a device of the type described which substantially confines the sterilizing ultraviolet rays within the vicinity of the articles supported thereby, so as to insure against excessive exterior exposure of the rays.

Still another object of the present invention is the provision of a device of the type described in which access to the lamps within the housing means of the device for purposes of replacement is sufficiently difficult to prevent access by small children.

Still another object of the present invention is the provision of a device of the type described having improved means for supporting a plurality of toothbrushes in positions of easy accessibility while at the same time insuring rapid and complete sterilization thereof.

Still another object of the present invention is the provision of a device of the type described in which the toothbrush supporting means is easily removable for purposes of cleaning.

Still another object of the present invention is the provision of a device of the type described having improved means for supporting a drinking container in a position of easy accessibility while at the same time insuring rapid and complete sterilization thereof.

Still another object of the present invention is the provision of a device of the type described which is simple in construction, effective in operation and requires a minimum of maintenance.

These and other objects of the present invention will become more apparent during the course of the following detailed description and appended claims.

The invention may best be understood with reference to the accompanying drawings wherein an illustrative embodiment is shown.

In the drawings:

FIGURE 1 is a perspective view of a device for supporting and sterilizing a plurality of toothbrushes and a drinking container and for deodorizing the surrounding air embodying the principles of the present invention;

FIGURE 2 is a reduced exploded perspective view illustrating the separable parts of the device;

FIGURE 3 is an enlarged sectional view taken along the line 3—3 of FIGURE 1;

FIGURE 4 is an enlarged sectional view taken along the line 4—4 of FIGURE 1;

FIGURE 5 is an enlarged sectional view taken along the line 5—5 of FIGURE 1;

FIGURE 6 is a perspective view of the toothbrush supporting tray;

FIGURE 7 is an enlarged fragmentary sectional view illustrating the manner in which the drinking container is supported and sterilized in the device and the deodorizing gas is circulated through the device; and

FIGURE 8 is a view similar to FIGURE 7 illustrating

the manner in which the toothbrushes are supported and sterilized in the device.

Referring now more particularly to the drawings, there is shown in FIGURE 1 thereof a device for supporting and sterilizing a plurality of toothbrushes and a drinking container and for deodorizing the surrounding air embodying the principles of the present invention, which is generally designated by the numeral **10**. The device **10** comprises a housing, generally indicated at **12**, which may be of any desirable construction and made of any desirable material. As shown, there is provided a bottom wall **14** of rectangular configuration having a front wall section **16** extending upwardly from the front edge thereof, the front wall section **16** having an inwardly extending downwardly and rearwardly inclined flange **18** formed thereon. The bottom wall **14**, front wall section **16** and flange **18** may be made of any suitable material and, as shown, they are formed of a single piece of sheet metal bent into the proper configuration. Fixedly secured, as by welding or the like, to opposite ends of the bottom wall **14**, front wall section **16**, and flange **18**, is a pair of upright end walls **20** and **22** which likewise may be of any suitable material and, as shown, are of sheet metal construction. Extending between the end walls **20** and **22** at a position above the flange **18** is a thin front wall section **24** having its ends suitably fixed to the associated end walls as by welding or the like.

The inner edge of the flange **18**, the lower edge of the front wall section **24** and the adjacent edges of the end walls define a horizontally extending opening **26** for receiving a toothbrush support in the form of a removable tray, generally indicated at **28**. It will be noted that each of the end walls has an angle iron section welded thereto providing a flange **30** extending rearwardly and downwardly from the flange **18** so as to support the tray **28** at its ends within the housing.

The housing **12** also includes a back wall or panel **32** which likewise may be made of any suitable material and, as shown, is of sheet metal construction. The back wall is detachably secured to the bottom and end walls by any suitable means such as a bottom flange **34** on the back wall which engages the rear marginal edge portion of the upper surface of the bottom wall and a pair of inwardly turned vertically disposed flanges **36** formed on the end walls. Suitable fastening elements, such as countersunk bolt assemblies **38**, extend through the back panel and the flanges **36** to detachably fixedly secure the back wall with the bottom and end walls.

Carried by the back wall is a pair of electrical socket fixtures or units **40** of conventional design. Any suitable means may be provided for mounting each of the socket units on the back wall and, as shown, such means includes opposed sheet metal brackets **42** welded or otherwise secured to the back wall **32** and providing substantially circular openings to receive and support the socket units. Threaded within the socket units is a pair of lamps or bulbs **44** which are of the type adapted to emit electromagnetic rays of a germicidal frequency and to generate a germicidal gas capable of deodorizing air diffused therewith. Lamps of this type usually require a starting device, such as the ballast **46** shown in FIGURE 4. In accordance with usual practice, the lamps **44** are connected in series with each other and with the ballast **46** and, if desired, an on and off switch **48** may also be connected in series to control the circuit.

As shown, the circuit includes a dual lead insulated cord **50** having a male outlet **52** connected at one end thereof. The cord extends through a suitable eyelet **54** in the end wall **22** of the housing and one lead of the cord is connected with one contact of the switch **48** while the other lead is connected with one contact of one of the socket units. The other contact of the one socket unit is interconnected with a contact of the other socket unit by a lead **56**, and a lead **58** is connected with the other contact of the other socket unit and extends to one contact of the ballast **46** as shown in FIGURE 4. Finally, the other contact of the ballast is connected to one end of a lead **60**, the opposite end of which is connected to the other contact of the switch. It will be understood that the circuit may also have connected in series or parallel therewith an outlet socket (not shown) which may be suitably mounted in a wall of the housing for exterior use, as by an electric shaver or the like.

The housing also includes a wall unit, generally indicated at **62**, which is preferably made of an interiorly beaded translucent material such as polyethylene, nylon, high impact polystyrene or the like. The wall unit **62** includes a pair of horizontal top wall sections **64** and a central top wall section **66** which is inclined downwardly and forwardly. The inner edge of each horizontal top wall section is connected with the adjacent edge of the inclined top wall section by an upright triangular wall section **68**. Extending downwardly from the forward edges of the horizontal top wall sections, inclined top wall section and triangular wall sections is a front wall section **70**, the lower edge of which is arranged to extend in overlapping relation to the front wall section **24** previously described. The wall unit is secured to the upper forward portion of the end walls **20** and **22** by any suitable means, such as a pair of fastening elements preferably in the form of countersunk bolt assemblies **72** extending through the horizontal top wall sections and a pair of flanges **74** extending inwardly from the upper edge of the end walls.

Formed in the inclined top wall section **66** of the unit **62** is an opening **76** which is preferably circular in configuration and of a size to receive therein a drinking container such as a container C as shown in FIGURES 1 and 7. Preferably, the unit **62** includes an integral depending annular wall or lip portion **78** which serves to prevent direct visibility through the opening **76** of the filaments of the lamps **44**, as best shown in FIGURE 3.

In a like manner, in order to prevent direct visibility through the toothbrush supporting tray opening **26**, there is provided a housing wall member **80** having a vertical flange **82** rigidly secured, as by welding or the like, to the interior surface of the front wall section **24**, a horizontal flange **84** extending inwardly therefrom for engaging the lower edge of the front wall section **70** of the wall unit **62** and a downwardly and inwardly inclined flange or wall portion **86** which serves to prevent direct vision of the filaments of the lamps **44** through the opening **26**.

Disposed below the drinking container receiving opening **76** and the lower edge of the annular lip is a pair of downwardly and forwardly inclined strap members **88** which constitute means for engaging the drinking container and supporting the same in proper relation within the opening **70**. The strap members **88** may be mounted within the housing in any suitable manner, and, as shown, they are provided with rearward depending bent portions **90** which are fixed to the back wall as by welding or the like.

In a like manner, the toothbrush supporting tray is provided with suitable means for supporting a plurality of toothbrushes T therein. As best shown in FIGURE 6, the tray **28** is of shallow partitioned construction and includes a bottom wall **92** having a lower inclined upright wall **94** and a plurality of forwardly and rearwardly extending partition walls **96** defining a central compartment **98** and three toothbrush receiving compartments **100** on each side thereof. The partition members defining the central compartment **98** have their upper ends interconnected by an inclined wall section **102** which is provided with a handle **104** to facilitate movement of the tray into and out of the housing. It will be noted that the upper ends of the toothbrush receiving compartments are open.

Operation

The present device is arranged to be utilized in the

bathrooms of dwelling homes, hotels, motels and the like. Preferably, the lamps are continuously actuated although it will be understood that the user may control the actuation of the same by turning the switch 48 whenever desired. While any lamp of the type described may be utilized, a specific example of a preferred lamp is the 749H lamp manufactured by Westinghouse Electric Corporation and sold under the trademark Odorout. Each of these lamps has a rated wattage of 3½ watts, an operating amperage of 0.350 amps., an operating voltage of 10 to 12 volts, a starting voltage of 24 volts, and an average rated life of approximately 4,000 hours when burned at 8 hours the start at 80° F. or more temperature and under specified test conditions, as noted in the above-mentioned Westinghouse publication so that a pair of such lamps can be operated continuously for an extended period of time at a very low cost.

It will be understood that a lamp of the type mentioned above is capable of generating electromagnetic rays having wave lengths of ultraviolet frequency equivalent to 2537 Angstrom units. Approximately 95% of the ultraviolet radiations from lamps of this type are in the 2537 Angstrom unit region. This is the region in the ultraviolet spectrum which is near the peak in germicidal effectiveness. Each 794H lamp has a rated ultraviolet output of 0.1 total watts and 1.2 microwatts per square centimeter at one meter from the lamp. In addition, the lamp is capable of producing shorter wave length ultraviolet rays of 1850 Angstrom units. This latter wave length has the power of generating ozone in the air, which is a form of oxygen and is a germicidal agent in itself. Each 794H lamp has a ozone generating rating of 0.023 gr./hour.

Utilizing two lamps of this type, complete sterilization of toothbrushes can be achieved in a matter of two or three hours, while complete sterilization of a drinking container is achieved in less than 10 minutes. Ozone distribution in the surrounding air of a bathroom of average size sufficient to deodorize the same is accomplished in a relatively short period of time. Moreover, this deodorization is maintained so long as the lamps remain actuated without generating a concentration of ozone in the air beyond a permissible amount under normal conditions.

The present device is constructed so as to provide for optimum ease and convenience in supporting the toothbrushes and drinking container while at the same time presenting these articles to the source of sterilizing rays and sterilizing gas in such a way as to effect rapid and complete sterilization thereof. As best shown in FIGURE 8, it will be noted that the toothbrushes are supported in the tray 28 with the brush ends disposed in a position of exposure to the direct ultraviolet rays of the lamps. The opposite ends or handle ends of the toothbrushes extend outwardly of the housing, as shown in FIGURE 1, so that they may be easily and conveniently grasped by the user. Thus, the toothbrush supporting tray 28 provides for convenient access to the toothbrushes and permits the user to remove the toothbrushes from supported relation and place the toothbrushes in supported relation without the necessity of opening doors or any other manipulation. When the toothbrushes are in supported relation they are presented to the sterilizing source in a most advantageous manner as close as possible to the source without the necessity of providing obstructing parts between the source and the brushes. The angle at which the toothbrushes are supported as shown in the drawings is approximately 10° and this is regarded to be an optimum position for achieving the results set forth above.

It will be noted that the brush ends of the toothbrushes are disposed within the housing when supported in proper relation and thus are maintained in a sterilized zone rather than in the surrounding air. While there is adequate air circulation through the interior of the housing to permit the toothbrushes to dry quite rapidly, the immediate air surrounding the toothbrushes is sterilized so as to prevent any re-contamination. It will be understood that the tray 28 itself is removable from the housing solely for the purpose of cleaning and that, under normal conditions, it would not be necessary to effect such removal for cleaning purposes except at infrequent intervals.

The opening 26 provided in the housing, as well as the open forward ends of the toothbrush compartments 100 of the tray 28, provide an inlet for the surrounding air to enter the interior of the housing as shown by the arrows in FIGURE 7. The lamps 44 also give off some heat and, as a result, there is established within the housing a thermally induced circulation from the inlet through the interior of the housing and upwardly and outwardly of the housing through the container receiving opening 76. This circulation enhances the generation of ozone by the lamps and has the effect of distributing the ozone generated into the surrounding air in a rapid manner. In addition, as shown in FIGURE 7, the container receiving opening 76 is preferably of a size greater than the size of the container C to be supported therein. Thus, even when a container is supported within the opening there is an ample outlet for the passage of the ozone diffused air from the interior of the housing into the surrounding air to effect deodorization thereof. It will also be noted that the support of the container C within the device in inverted relation achieves several advantages. First, by supporting the container within the opening 76, which constitutes the outlet for the ozone diffused air, the ozone generated within the housing will pass upwardly into the interior of the container, thus achieving a more effective sterilization of this hard-to-reach area. In a like manner, the ozone passing by the exterior of the container will hasten sterilization of the exterior thereof. Second, the area of the container in greatest need of sterilization is the exterior marginal portion adjacent the open end which is engaged by the lips of the user and it will be noted that the strap members 88 are disposed below the depending lip 78 approximately one inch, so as to present this area of the container for exposure to the direct ultraviolet rays emitted by the lamps 44. This insures rapid and complete sterilization of this critical area of the container by concentrating the rays thereon. Finally, another advantage of supporting the container in inverted relation is that any residual liquid therein will drain out into the central compartment 98 of the tray 28, thus insuring that the container will be dry and sterile in a short period of time. In this regard, it will be noted that the container is supported in an inclined plane disposed at an angle of approximately 11° with respect to the horizontal. This inclination, which is regarded to be an optimum, facilitates the drainage of the liquid from the container into the central tray compartment and at the same time stably supports the container and presents the upper closed end portion thereof, which extends above the top wall sections 64 and 66 of the housing, in a most convenient position of access.

Another significant feature of the present construction is that the housing provides wall means which positively prevent direct vision of the filaments of the lamps either through the openings 26 or 76 or from any exterior position of normal use. The housing, as described above, is particularly adapted to be mounted on a vertical wall and for this purpose it will be noted there is provided in the back wall a pair of key-shaped knockout portions 106 shown in dotted lines in FIGURE 3, through which suitable fastening elements (not shown) may extend to secure the same to the vertical wall surface. It will also be understood that the bottom wall may be provided with suitable rubber grommets or the like (not shown) enabling the device to be conveniently supported on a horizontal surface. In both instances the housing 12 provides a complete blockage of direct rays outwardly of the housing. As is well-known, con-

tinued exposure to direct ultraviolet rays may produce transitory conditions such as reddening of the skin and irritation of the eyes. The present structure thus prevents exterior exposure of these direct rays. Moreover, access to the lamps 44 for replacement purposes can be obtained by simply removing the fastening elements or bolts 72 which secure the wall unit 62 in the upper forward portion of the housing. The manipulation of these bolts provides simplicity of access when appropriate tools are at hand while, at the same time, preventing easy access to the exposed lamps by small children.

It will be understood that the present structure constitutes a device which, as indicated above, may be either mounted on a wall or supported on a horizontal surface and under these circumstances it is preferable to provide a housing which is completely enclosed except for the inlet and outlet openings provided. It will be understood, however, that the device is susceptible to being installed as built-in equipment, such as in new construction, in whcih case some of the walls of the device may be provided by the built-in structure itself. In any event, it is highly desirable that the filaments of the lamps be protected against direct visibility from any position exterior of the housing when the device is properly installed.

Finally, by utilizing a translucent plastic material in the wall unit 62, there is provided adequate safeguards against exterior exposure of the direct ultraviolet rays while, at the same time, permitting exterior visibility of the violet light emitted by the bulbs. Thus, the present device provides an effective night light for the bathroom. In this regard, the interior surface of the plastic material may be beaded in a known manner, to diffuse this light over the area of the wall unit to enhance the effect.

It thus will be seen that the objects of this invention have been fully and effectively accomplished. It will be realized, however, that the foregoing specific embodiment has been shown and described only for the purpose of illustrating the principles of this invention and is subject to extensive change without departure from such principles. Therefore, this invention includes all modifications encompassed within the spirit and scope of the following claims.

I claim:

1. A device for supporting and sterilizing a plurality of toothbrushes and a drinking container and for deodorizing the surrounding air comprising housing means, means in said housing means for receiving electrically actuated lamp means of the type adapted upon actuation to emit electromagnetic rays of a germicidal frequency and to generate a gas capable of deodorizing air diffused therewith, means for supporting a plurality of toothbrushes in said housing means in positions of exposure to the rays emitted by the lamp means, means for supporting a drinking container in said housing means in a position of exposure of at least the lip engaging portion thereof to the rays emitted by the lamp means, said housing means having spaced exterior opening means therein providing for movement of toothbrushes to and from said toothbrush supporting means and for movement of a drinking container to and from said drinking container supporting means at all times and an inlet and outlet for continuous thermally induced circulation of surrounding air through said housing means to be diffused with the gas generated by the lamp means, said housing means including wall means for preventing direct visibility of the lamp means when said device is normally installed either through said opening means or from substantially any normal use position exterior of said housing means.

2. A device as defined in claim 1 wherein said housing wall means comprises an exterior top wall and an exterior front wall, said spaced exterior opening means being formed in said front and top wall respectively.

3. A device as defined in claim 2 wherein the opening means in said top wall comprises a circular drinking container receiving opening disposed in the central portion of said top wall and wherein said lamp receiving means comprises a pair of socket fixtures mounted within said housing adjacent to and below said top wall on opposite sides of said circular opening.

4. A device as defined in claim 3 wherein said top wall comprises a central portion extending downwardly and forwardly within which said circular opening is formed and two side portions extending generally horizontally below which said socket fixtures are disposed.

5. A device as defined in claim 1 wherein said wall means includes portions made of translucent material permitting the light from the lamp means to be visible exteriorly of said housing means.

6. A device for supporting and sterilizing a drinking container and for deodorizing the surrounding air comprising housing means, means in said housing means for receiving electrically actuated lamp means of the type adapted upon actuation to emit electromagnetic rays of a germicidal frequency and to generate a germicidal gas capable of deodorizing air diffused therewith, said housing means including an upwardly facing opening in the upper portion thereof of a size to receive a drinking container in inverted relation, means in said housing means disposed below said opening permitting communication of said opening with the interior of said housing means for engaging the inverted open end of the drinking container and supporting the same within said opening with the open end of the container in a position of exposure to the rays emitted by the lamp means and with the closed bottom end of the container extending upwardly above said opening so as to permit the same to be readily grasped, said housing means including opening means spaced below said container receiving opening providing an inlet in said housing means for surrounding air so as to establish a thermally induced flow of the gas generated by the lamp means within said housing means upwardly through said opening to fill the interior of a container supported therein, said opening being of a size greater than the drinking container to be supported therein so as to permit a portion of said flow to pass outwardly of said opening into the surrounding air when a container is supported therein, said housing means including wall means preventing direct visibility of the lamp means therein when said device is normally installed from substantially any normal use position exterior of said housing means.

7. A device for supporting and sterilizing a plurality of toothbrushes and a drinking container and for deodorizing the surrounding air comprising: a substantially closed housing including top and bottom walls, front and rear walls and end walls; a pair of electric socket fixtures mounted within said housing at horizontally spaced positions adjacent to and below said top wall; a pair of electrically actuated lamps in said socket fixtures of the type adapted upon actuation to emit electromagnetic rays of a germicidal frequency and to generate a germicidal gas capable of deodorizing air diffused therewith, said front wall having a horizontally extending opening formed therein; a shallow tray having a plurality of partition walls therein defining a plurality of compartments closed at one end and open at the other end for receiving a plurality of toothbrushes with their brush ends adjacent the closed ends of the compartments and their handle ends extending outwardly of the open ends thereof, said tray being of a size to engage within said horizontally extending opening, means for removably supporting said tray within said housing in a position extending rearwardly and downwardly from said horizontally extending opening with the closed ends of said compartments within said housing adjacent to and below said lamps and with the open ends of said compartments adjacent said horizontally extending opening so as to permit movement of

the toothbrushes supported therein into and out of their compartments and to provide an inlet into said housing for surrounding air to be diffused with the gas generated by said lamps, said top wall having an opening formed in the central portion thereof between said socket fixtures of a size to receive a drinking container in inverted relation and to provide an outlet for the gas diffused air so as to permit a thermally induced circulation through said housing, means in said housing disposed below said container receiving opening permitting communication of said opening with the interior of said housing for engaging the inverted open end of the drinking container and supporting the same within said container receiving opening with the open end of the container in a position of exposure to the rays emitted by the lamps and with the closed bottom end of the container extending upwardly above said container receiving opening so as to permit the container to be readily grapsed, said housing having means including said walls for preventing direct visibility of the lamps therein when said device is normally installed from substantially any normal use position exterior of said housing.

8. A device as defined in claim 7 wherein said tray

extends downwardly and forwardly at an angle of approximately 10° with respect to the horizontal.

9. A device as defined in claim 8 wherein said container engaging and supporting means comprises horizontally spaced members providing container engaging surfaces disposed in a downwardly and forwardly inclined plane disposed at an angle of approximately 10° with respect to the horizontal.

10. A device as defined in claim 7 wherein said tray includes a central liquid receiving compartment disposed below said container receiving opening.

References Cited in the file of this patent

UNITED STATES PATENTS

2,180,213	Peake	Nov. 14, 1939
2,249,473	Jackson et al.	July 15, 1941
2,579,242	Pask	Dec. 18, 1951
2,587,131	Ficken	Feb. 26, 1952
2,592,131	Farrar	Apr. 8, 1952
2,676,862	Swain	Apr. 27, 1954
2,702,862	Finney	Feb. 22, 1955
2,738,428	Dressell et al.	Mar. 13, 1956