March 7, 1933. H. L. DURHAM 1,900,011

CORROSION PREVENTING ATTACHMENT FOR BOATS

Filed June 23, 1931

Fig. 1

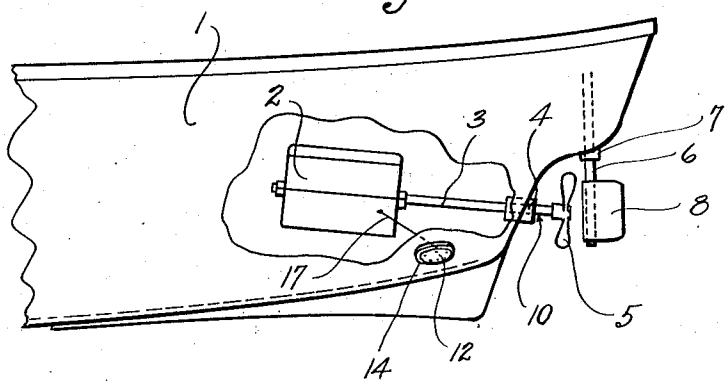

Fig. 2

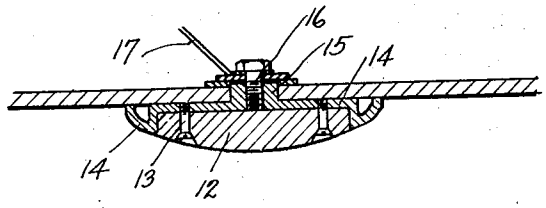

Fig. 4

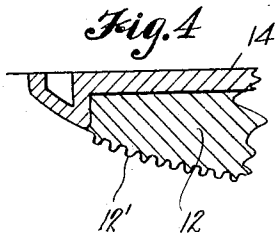

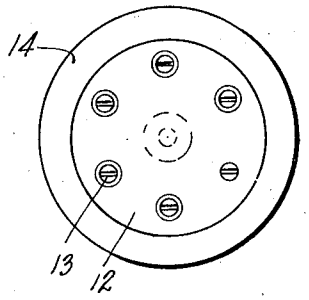

Fig. 3

INVENTOR
HAROLD L. DURHAM
BY
Cook & Robinson
ATTORNEY

Patented Mar. 7, 1933

1,900,011

UNITED STATES PATENT OFFICE

HAROLD L. DURHAM, OF EVERETT, WASHINGTON

CORROSION PREVENTING ATTACHMENT FOR BOATS

Application filed June 23, 1931. Serial No. 546,285.

This invention relates to a method of and means for preventing electrolysis and it has reference in particular to the application of this method and means to motor or engine driven boats which operate in salt or sea water, although not limited to boats; it being the principal object of the invention to provide an economical and satisfactory means for overcoming that undesirable and destructive corrosion or eating away of parts exposed to the water, such as the propeller shaft, the rudder post and bushings, that is caused by galvanic or electrolytic action resultant to the use of different metals in the boat, bearings, bushings, shafts, etc., and their contact with salt water.

Explanatory to the present invention, it will here be stated that considerable damage is done to boats operating in salt water, due to this galvanic or electrolytic action, and it is required that the bushings and bearings which support the propeller shaft and rudder quite frequently be replaced; also it often happens that the propeller shaft and the rudder shaft will be eaten away adjacent their supporting bearings and this will finally result in their breaking off. Also, rivets are eaten away and propellers and rudders also become pitted and damaged. As a general rule bushings used in these positions are of brass or bronze, and the shafts which operate therein are of steel, while the propeller and rudder are of brass or bronze. These different metals, operating in salt water, produce an action that is exactly analogous to the action of a primary battery in which a piece of zinc and a piece of carbon are immersed in an electrolite and connected through an external circuit. In such a case one of the metals corrodes and is carried to the other, on which it is deposited.

This action of electrolysis has been overcome in the present invention by effecting a change of polarity so that those parts ordinarily affected, such as rudders, propellers, bushings, etc., become the negative poles instead of positive. This change is effected by electrically connecting all those parts affected by electrolysis in a circuit with one or more zinc plates, exposed to the salt water and of sufficient size to be effective as positive anodes in the circuit. These plates of zinc are contained in bronze bases, which in turn are electrically connected to the metallic parts within the boat. such as the hull, engine housing, propeller shaft and bushings, in such manner that the zinc plates will charge off into the water instead of the usual corrosion of bearings, bushings or shafts of the operating parts; it being provided that the zinc plate may be replaced as often as is necessary.

Other objects of the invention reside in the various details of construction, the combination of parts, and their mode of use, as will hereinafter be described.

In accomplishing the objects of the invention, I have provided the improved details of construction, the preferred forms of which are illustrated in the accompanying drawing wherein—

Fig. 1 is a sectional detail of a portion of a boat, diagrammatically illustrating the location of the engine propeller and drive shafts, and also the disposition of the zinc plate and its connection with the engine in accordance with the present invention.

Fig. 2 is an enlarged sectional view of the zinc plate and its mounting base.

Fig. 3 is a plan view.

Fig. 4 is a sectional detail showing the corrugated surface of the plate.

Referring more in detail to the drawing—

1 designates what may be a boat of the ordinary wooden hull type used for pleasure or for fishing or other commercial purposes; 2 designates the engine, 3 the propeller shaft which extends from the engine rearwardly through a stern bearing 4, and which, at its end, mounts a propeller 5. Supported rearwardly of the propeller, by means of a vertical shaft 6 extended through mounting bearings 7, is a rudder 8.

As was previously stated, boats not equipped with the electrolysis eliminating zinc plate and its circuit connections, are damaged by the electrolytic action incident to use of different metals in salt water. This damage as a rule shows in the corrosion of the propeller shaft adjacent the stern bearing,

as at the point 10, and it is frequently required that the shaft and shaft bearing be repaired or replaced. The same is true of the rudder shaft and bearings.

To overcome the undesirable corrosion, I have provided a circular plate or disk of zinc 12. This is detachably fixed by means of a plurality of screws 13 within a base plate 14 of bronze. The base has a central boss 15 on its back side for receiving a bolt 16 for securing it to the boat hull, and a circuit connection 17 extends from the bolt and is grounded to a metal portion of the engine or to a bearing within the boat in which the propeller shaft is carried. In the event that the hull is of metal, the bronze base must be properly insulated from it. It will be apparent that with this arrangement, any current that is created will flow from the zinc plate across the intervening space between the plate and the propeller, rudder or their shafts, and will then return to the engine and through the short circuit 17 back to the plate. This direct connection with the engine eliminates circuit passing from the shaft adjacent the stern bushing and then through bushing and the stern bearing, thus causing corrosion of the shaft and destruction to adjacent parts. When the zinc plate has been eaten away it may be removed for replacement simply by removing its supporting screws 13. It is preferred that the surface of the zinc plate be corrugated, as at 12′ in Fig. 4, as this provides more surface.

Experience has proven the value of this invention. It has been found that when it is in use, there is no destruction to the propeller shaft or its bearings, and that the only noticeable corrosion is in the zinc plate. The proof of this action is found in the fact that the propeller, shaft and rudder will be plated with the zinc.

It is to be understood that the drawing is only illustrative of the use of the method, and that as many of the zinc plates may be used as are found to be necessary, in order to change the polarity of those parts which, without use of the plates, would be the positive anodes of the circuit. These plates would be placed at various places, and meters could be employed in the circuit to indicate the extent to which the method was effective.

The essence of the invention, as above described, is thought to reside in the connecting up, by copper wire or the like, of all affected parts exposed to the salt water, with one or more of the eliminator plates of zinc which are exposed to the salt water which serves as the electrolyte. The use of these zinc plates reverses the normal flow of current so that parts normally affected become negative and receive the zinc deposit.

The principal point to consider in carrying out the method is to make sure that all parts affected by electrolysis will be properly in circuit.

Although the invention has been described principally in its application to boats operating in salt water, it is not the intention that the invention be limited in use only to boats, but that it be applied wherever electrolysis occurs and where the method can conveniently be employed. In this respect I have reference to overcoming electrolysis in pumps operating in salt water; also various machines connected with sewers and the like, in which electrolysis occurs by reason of the use of various metals in a conducting electrolyte.

Having thus described my invention, what I claim as new therein and desire to secure by Letters-Patent is:

1. In a boat designed for operation in salt water and having a stern bearing and propeller shaft extending therethrough, a zinc plate attached to the hull of the boat and in contact with the water in which it floats and having a circuit connection with the propeller shaft at a point within the stern bearing.

2. In a boat designed for operation in salt water and having a stern bearing, a propeller shaft extending through the bearing and an engine in the boat operatively connected with the shaft, a bronze base plate attached to the hull of the boat outside and beneath the water, a zinc plate mounted within said base plate and exposed to the water, and a circuit connection between the zinc plate and engine.

3. A device as in claim 2 wherein the zinc plate is removably mounted in the base plate.

4. A boat of the character disclosed having metallic parts thereof normally exposed to the water in which the boat operates, a plurality of metallic members, which are electro-positive with respect to said metallic parts, mounted on the boat in contact with the water, and conductors not exposed to the water, electrically connecting the said metallic parts and said metallic members to provide for completion of a circuit therethrough and through the water as an electrolyte.

Signed at Everett, Snohomish County, Washington, this 7th day of April, 1931.

HAROLD L. DURHAM.