United States Patent [19]

Herryman

[11] **3,889,816**

[45] **June 17, 1975**

[54] **BOOK HOLDER AND SEPARATOR**

[76] Inventor: **Rafael Marcelo Herryman,** 121 E. Allegheny St., Martinsburg, Pa.

[22] Filed: **Jan. 9, 1974**

[21] Appl. No.: **431,989**

[52] **U.S. Cl.** **211/43;** 108/61; 211/DIG. 1; 211/184

[51] **Int. Cl.²** **A47B 65/00**

[58] **Field of Search** ..... 211/43, 184, 42, DIG. 1; 248/441, 205 A; 108/60, 61

[56] **References Cited**

UNITED STATES PATENTS

481,505	8/1892	Muir	211/42
534,116	2/1895	Lyons	211/184
639,063	12/1899	Ladd	211/184 X
657,847	9/1900	Young	211/42
758,868	5/1904	Storm	211/43
809,315	1/1906	Maccallum	108/61
1,060,020	4/1913	Pennewill	211/184 X
1,230,653	6/1917	Benedict	211/184 UX
3,146,888	9/1964	Schaefer et al.	211/43
3,450,268	6/1969	Sakamoto	211/42
3,604,564	9/1971	Weyll	211/43

FOREIGN PATENTS OR APPLICATIONS

196,934	7/1938	Switzerland	211/42
34,766	7/1925	Denmark	211/42
524,080	5/1921	France	211/42
283,000	12/1952	Switzerland	211/184
282,902	2/1928	United Kingdom	211/43
794,035	4/1958	United Kingdom	211/43

Primary Examiner—Roy D. Frazier
Assistant Examiner—Thomas J. Holko
Attorney, Agent, or Firm—Smith, Harding, Earley & Follmer

[57] **ABSTRACT**

A holder and separator for books including a frame which is adapted to be secured underneath the top shelf of a bookcase, a pendulum having a head end and a free end having a magnet member thereon, the pendulum swinging between a horizontal position adjacent the top shelf of the bookcase above the books contained therein and a vertical position between two books in the bookcase for maintaining these books in a separated condition. A mangetically attractable member is affixed underneath the top shelf of the bookcase and is arranged to be contacted by the magnet member on the free end of the pendulum when the latter is in its horizontal position.

5 Claims, 7 Drawing Figures

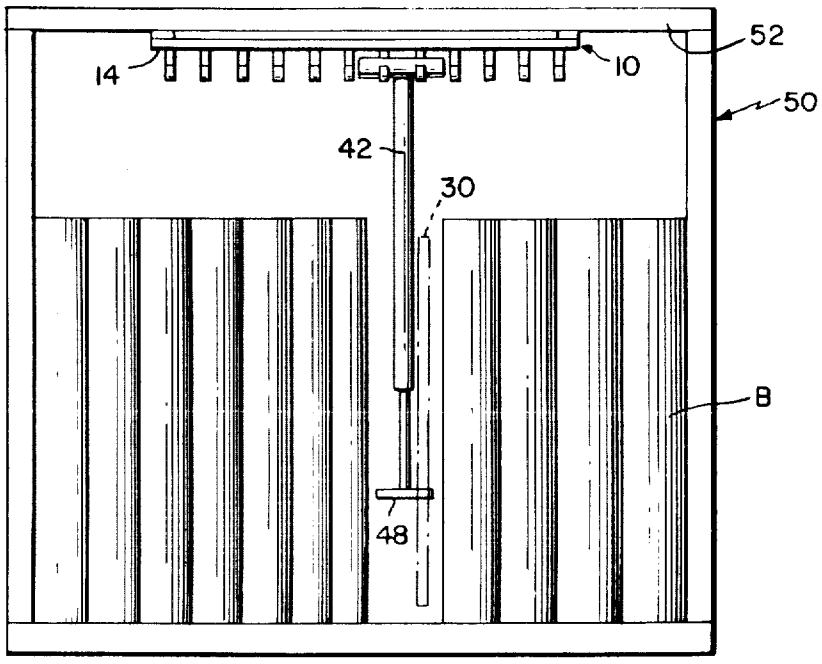

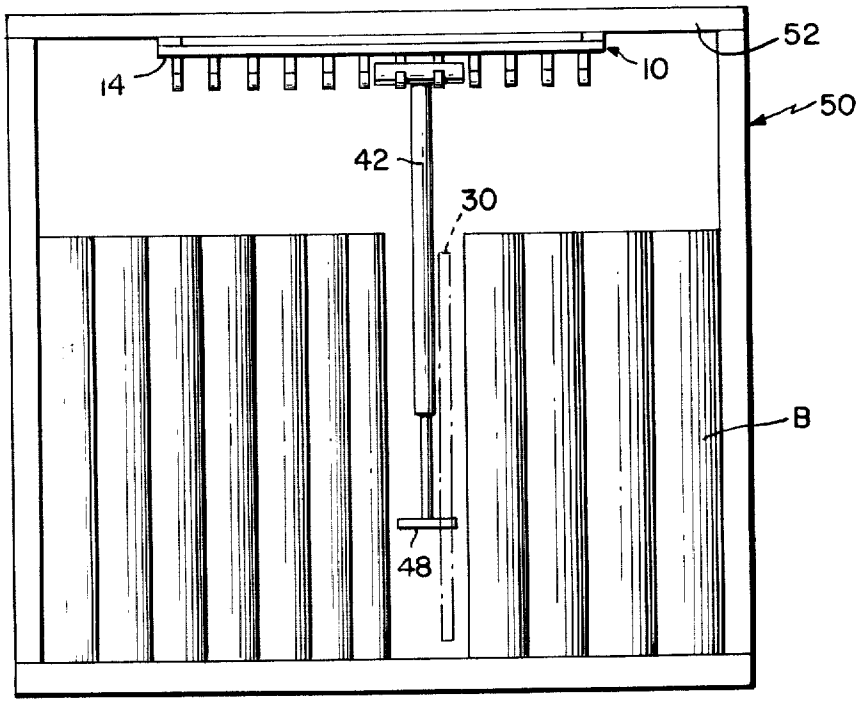

FIG. 1.

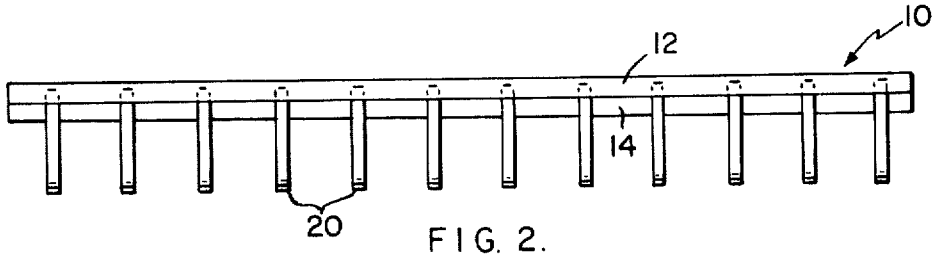

FIG. 2.

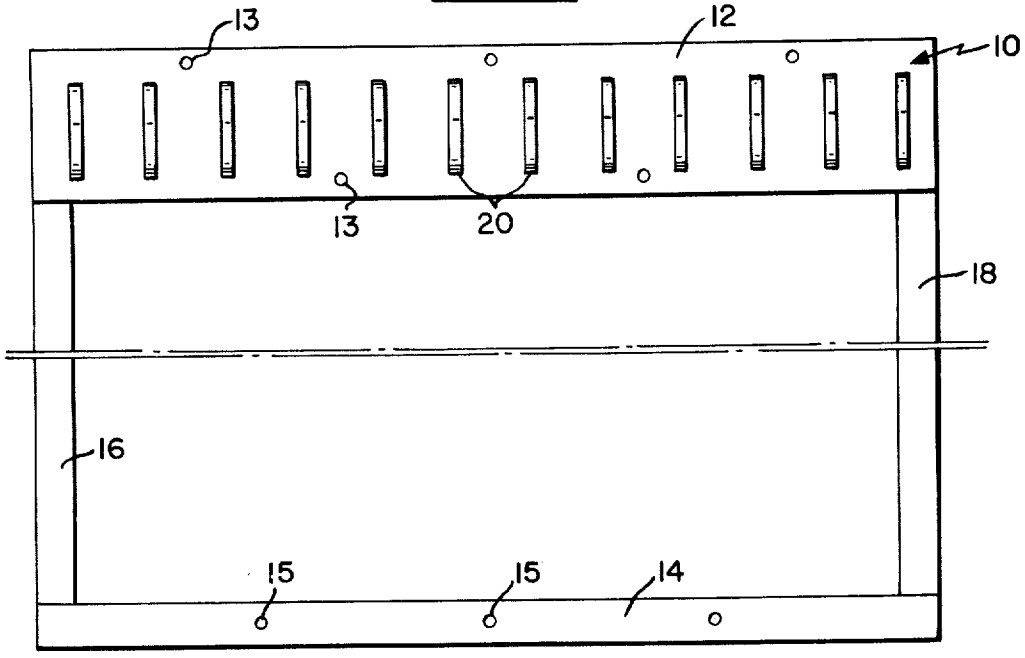

FIG. 3.

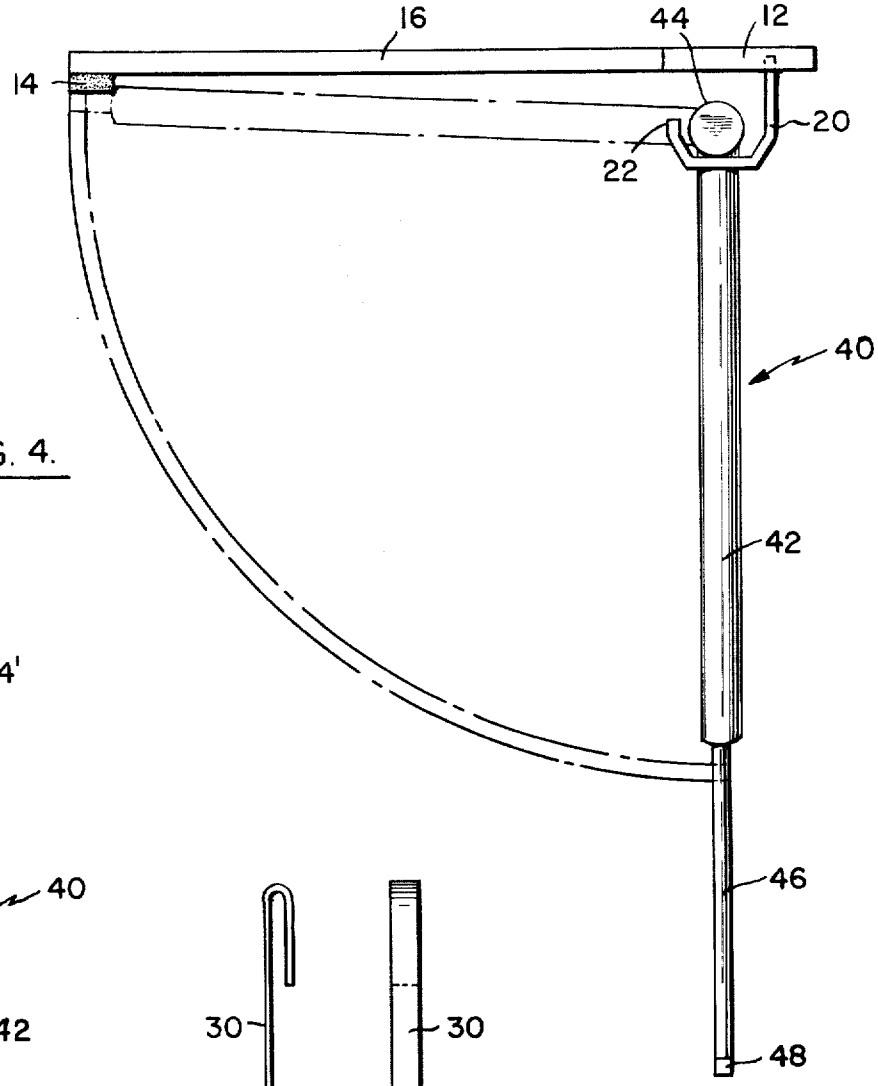

FIG. 4.

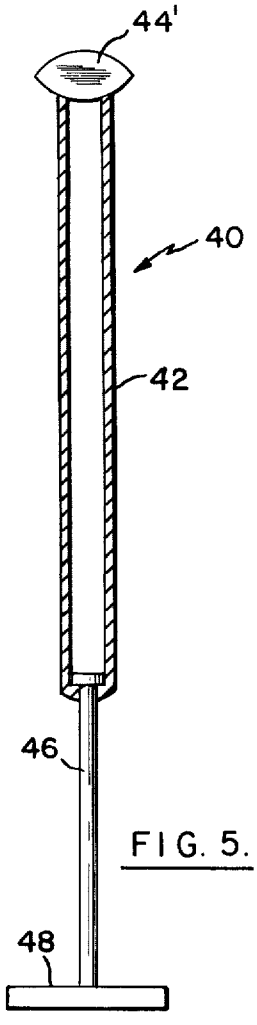

FIG. 5.



FIG. 6.



FIG. 7.

BOOK HOLDER AND SEPARATOR

BACKGROUND OF THE INVENTION

The present invention relates to accessories attachable to bookcases or any type of shelves used to keep books in a stacked condition such as in libraries or other similar places where books are kept, which accessory serves to facilitate the organization of the books in the bookcase. More specifically, the device in accordance with the invention is designed to keep or mark the place of a book when it is pulled out of a bookcase and to prevent the remaining books from falling to the side into the space caused by the book removal.

SUMMARY OF THE INVENTION

It is the general object of the invention to provide an improved holder and separator for books contained in a bookcase or the like, the design in accordance with the invention providing simple and effective means for marking the place of a book which is removed from a bookcase and maintaining the books in a separated condition.

Briefly stated, the general object of the invention is achieved by the provision of a holder and separator which comprises a pendulum member having a head end and a free end having a magnet member thereon, means for supporting the pendulum at its head end on the underside of the top shelf for swinging movement between a horizontal position adjacent the top shelf of the bookcase above the books contained therein and a vertical position between two books in the bookcase for maintaining the books in a separated condition. A magnetically attractable member is affixed underneath the top shelf of the bookcase and is adapted to be contacted by the magnet member when the pendulum member is in its horizontal position.

BRIEF DESCRIPTION OF THE DRAWINGS

FIG. **1** is a front elevational view of a bookcase provided with the holder and separator in accordance with the invention;

FIG. **2** is a rear elevational view of the frame used in the holder and separator for books in accordance with the invention;

FIG. **3** is a bottom view of FIG. **2**;

FIG. **4** is a side view of the holder and separator in accordance with the invention;

FIG. **5** is a detailed view of another form of pendulum member in accordance with the invention;

FIG. **6** is a side view of a cane-shaped flake; and

FIG. **7** is a front view of FIG. **6.**

DETAILED DESCRIPTION OF THE PREFERRED EMBODIMENTS

Referring to the drawings, the book holder and separator in accordance with the invention comprises a frame **10** which is a rectangular and comprises a rear leg **12** and a front leg **14** spaced apart and joined by a pair of side legs **16** and **18** (see FIG. **3**). The rear leg **12** can be made of various materials such as, wood, metal or plastic and is provided with a plurality of holes **13** spaced along the length thereof and adapted for the insertion of mounting screws. A plurality of generally J-shaped metal hooks **20** are mounted to project downwardly from the underside of leg **12** as is best shown in FIGS. **2, 3** and **4.** The hooks **20** are equally spaced along the length of the leg **12** and have a short vertically extending tail portion **22** spaced from the bottom of the leg **12** as is best shown in FIG. **4.**

The leg **14** is made of iron or any other suitable material that is magnetically attractable. Leg **14** is also provided with holes **15** adapted for the insertion of screws for mounting the same on the underside of the bookcase.

While the objective of the side legs **16** and **18** in the frame **10** is to hold the legs **12** and **14** in spaced parallel relation, it will be apparent that these side legs **16** and **18** can be omitted and that the front and rear legs **12** and **14** can be attached to the bookcase with screws and placed in the desired spaced position, in which case the rear leg **12** is attached underneath the top shelf of the bookcase and set toward the back and the front leg **14** is attached underneath the top shelf of the bookcase adjacent the front thereof.

In FIGS. **6** and **7** there is shown a cane-shaped flake (thin piece) of iron or any other magnetic material which is optional. The flake **30** is adapted to be hitched onto either the spine or either side cover of a book and can be used for marking the place of the book when it is removed from the bookcase as will appear hereafter.

There is provided a pendulum member **40** which is best shown in FIG. **4** and which is adapted to fit inside the hooks **20** so that it can be slid to the left or right along leg **12** to a place where a book is removed from the bookcase as is shown in FIG. **1.** The pendulum **40** comprises a body portion **42** which is preferably made of aluminum and is in the form of a hollow cylinder. The pendulum **40** also comprises a cylindrical head portion **44** adapted to be inserted within the hooks **20** for rotation therein to permit a swinging movement of the pendulum **40.** The pendulum **40** also comprises an extension **46** which is mounted for slidable telescoping movement within the body **42** between the extended position shown in FIG. **4** and a retracted position. At the free end of the extension **46** there is provided an elongated magnet **48** which can be positioned to extend transversely to the plane of the swinging pendulum.

The pendulum **40** is constructed and arranged for swinging movement from the vertical position shown in solid lines to a horizontal position shown in dashed lines in FIG. **4.** In the vertical position the extension **46** can be pulled to the fully extended position as is shown in solid lines in FIG. **4.** The extension **46** can also be pushed to a retracted position within the hollow cylindrical body and swung to a horizontally extending position shown in dashed lines in FIG. **4** with the magnet **48** in magnetic engagement with the iron leg **14.** This is the position to which the pendulum **40** is moved when it is not in use, it being noted that this position is adjacent the underside of the top shelf of the bookcase and above the books contained in the bookcase. Since the leg **14** is made of iron these parts stay in the horizontal position once the magnet **48** is placed in contact with the leg **14** until such time as they are manually separated.

In FIG. **5** there is shown an alternative embodiment in which the head end **44** is shaped in the form of a football as opposed to the cylindrical shape of a head end shown in FIG. **4.**

In FIG. **1** there is shown the application of the invention for holding and separating books in a small bookcase **50** containing books beneath a top shelf **52** on which the frame **10** is secured as shown. Obviously, the invention can be adapted to any size bookcase by

merely lengthening the legs **12** and **14** and enlarging the extent of hooks **20** and the pendulum **40** as desired, so long as the pendulum **40** is proportional to the hooks **20** and fits within them so that it can be moved along the hooks to the desired location. To this end, the head end portion of body **42** is designed to fit within a suitable clearance between the tail end **22** of each hook **20** and leg **12.** Also, where desired more than one pendulum **40** is mounted within the hooks **20** in those applications where many books are taken out at the same time.

In use, the pendulum **40** is normally maintained in the horizontal position above the books. When a book is removed from the bookcase as is shown in FIG. **1**, the pendulum **40** is released from its magnetically held horizontal position and swung to the vertically extending position. The extension **46** is pulled out of the body **42** as desired and positioned between the books adjacent to the book that has just been removed as is shown in FIG. **1.** The elongated magnet **48** is positioned to maintain these books in a separated condition and mark the place of the removed book.

Optionally, in the event that metal flakes are provided, a flake **30** is removed from its hitched position on the book which has just been removed from the bookcase and placed in contact with the magnet **48** as shown in dashed lines in FIG. **1.** The flake **30** is marked with the title of the book and thus provides a visual indication of the book which has been removed from a particular location.

I claim:

1. A holder and separator for books in a bookcase or the like having a top shelf above the books comprising a pendulum member having a head end and a free end, said free end having a magnet member thereon and being elongated so as to be extended transversely to the swinging path of said pendulum member, means for supporting said pendulum at said head end for swinging movement between a horizontal position adjacent the top shelf of the bookcase above the books contained therein and a vertical position between two books in the bookcase for maintaining the books in a separated condition, and a magnetically attractable member affixed underneath the top shelf of the bookcase and adapted to be contacted by said magnet member when said pendulum member is in its horizontal position.

2. A device according to claim **1** wherein said pendulum member comprises a body portion having said head end located at one end thereof and an extension portion having said free end located at one end thereof, said body portion and said extension portion being telescopically mounted together so that said extension is movable from a retracted position to an extended position.

3. A device according to claim **2** wherein said supporting means for said pendulum comprises a plurality of hooks spaced along the bookcase underneath the top shelf thereof, said head end of said pendulum member being constructed and arranged to be slid along the top shelf of the bookcase within said hooks to various positions.

4. A device according to claim **1** comprising a rectangular frame including said pendulum supporting means and said magnetically attractable member.

5. A device according to claim **1** including a cane-shaped thin strip of magnetically attractable material adapted to be supported on said magnet member.

* * * * *